CORN HEAD

Parts Catalog

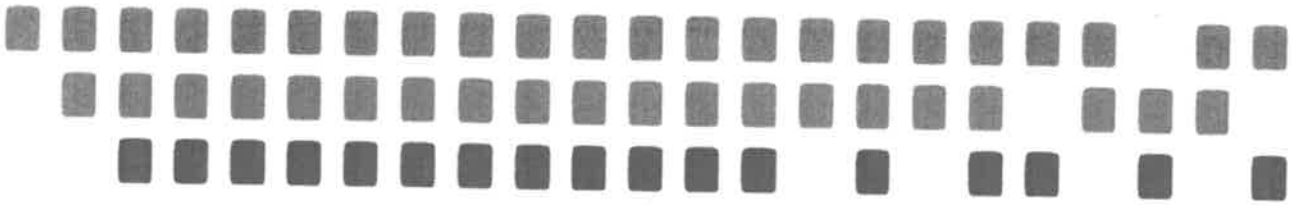

6000
SERIES

Harvestec

2017

1.377.252

Table of contents

INPUT DRIVE..... 1
OUTER DRIVE..... 2
OUTER DRIVE (2016→)..... 2/A
INPUT GEARBOX..... 3
GATHERING CHAIN ADJUSTER..... 4
FRAME ASSEMBLY- RIGID..... 6
FRAME ASSEMBLY- FOLDABLE..... 7
AUGER ASSEMBLY - RIGID..... 8
AUGER ASSEMBLY 6306F, 6308F, 6309F..... 9
AUGER ASSEMBLY 6312F..... 10
STALK CHOPPER..... 13/A
SNAPPING UNIT DRIVE - RIGID..... 14/A
SNAPPING UNIT DRIVE - RIGID..... 14/B
SNAPPING UNIT DRIVE - FOLDABLE..... 15/A
DRIVE-SHIELDS - RIGID..... 16/A
DRIVE-SHIELDS - RIGID..... 16/B
DRIVE-SHIELDS - FOLDABLE..... 17/A
ELECTRIC & HYDRAULIC SNAPPING PLATE ADJUSTER..... 18/A
SNAPPING PLATE ADJUSTING RODS..... 19/A
SIDE-SHIELDS & DRIP LUBRICATION..... 20
PLASTIC CENTRAL DIVIDERS - (30", 28")..... 21/A
PLASTIC CENTRAL DIVIDERS - (20", 22") 2014.->..... 21/B
PLASTIC OUTER DIVIDERS..... 22/A
PLASTIC HINGED DIVIDERS - (30", 28")..... 23/A
HYDRAULIC FOLDABLE → 2015..... 24/A
HYDRAULIC FOLDABLE 2016 →..... 24/A1
HYDRAULIC FOLDABLE 2016 →..... 24/A2
HYDRAULIC FOLDABLE 2016 →..... 24/A3
HYDRAULIC FOLDABLE 2016 →..... 24/A4
HYDRAULIC RIGID..... 24/B
MOUNTING KIT: CNH, CR, TR, CASE AFX..... 25/A
MOUNTING KIT: NEW HOLLAND CNH CX, CR, TR, TX, TC, TF, CASE AFX (2016→)..... 25/B
MOUNTING KIT: LEXION..... 26
MOUNTING KIT: JD..... 27
LEXION MULTI-COUPLING KITS..... 28
MULTI-COUPLING KIT: JD..... 29/A
MULTI-COUPLING KIT: AGCO..... 29/B
LABELS - WARNING..... 31/A
LIGHTING..... 32
MOUNTING KIT: CASE IH (→2500 series combines)..... 35
MOUNTING KIT: MF 8680, Gleaner C, 8780, 9690, 9790..... 37
MOUNTING KIT: MF 8570..... 39
AUTOMATIC HEADER HEIGHT CONTROL (AHHC)..... 42
STUBBLE STOMPER..... 43/A
SIDE EXTENSION..... 45
SNAPPING KNIFE-ROLL..... 47
SNAPPING UNIT GEARBOX FOR KNIFE-ROLL ROW UNIT..... 48
SNAPPING UNIT WITH KNIFE ROLLS..... 49
MOUNTING KIT: GLEANER "R"..... 51
LABELS - MODEL..... 53
MECHANICAL INDICATOR..... 54
ROTARY DIVIDER..... 55
ROTARY DIVIDER HYDRAULIC..... 56
MULTI-COUPLING KIT: NH 2002→..... 58/A
HYDRAULIC KIT: IHC..... 59
SHIPPING ACCESSORIES..... 65

TORQUE VALUES FOR FASTENERS

Table of contents
(in alphabetical order)

MULTI-COUPLING KIT: AGCO 29/B
AUGER ASSEMBLY - RIGID..... 8
AUGER ASSEMBLY 6306F, 6308F, 6309F..... 9
AUGER ASSEMBLY 6312F..... 10
AUTOMATIC HEADER HEIGHT CONTROL (AHHC)..... 42
DRIVE-SHIELDS - FOLDABLE..... 17/A
DRIVE-SHIELDS - RIGID..... 16/A
DRIVE-SHIELDS - RIGID..... 16/B
ELECTRIC & HYDRAULIC SNAPPING PLATE ADJUSTER 18/A
FRAME ASSEMBLY- FOLDABLE..... 7
FRAME ASSEMBLY- RIGID..... 6
GATHERING CHAIN ADJUSTER 4
HYDRAULIC FOLDABLE → 2015..... 24/A
HYDRAULIC FOLDABLE 2016 →..... 24/A1
HYDRAULIC FOLDABLE 2016 →..... 24/A2
HYDRAULIC FOLDABLE 2016 →..... 24/A3
HYDRAULIC FOLDABLE 2016 →..... 24/A4
HYDRAULIC RIGID..... 24/B
HYDRAULIC KIT: IHC 59
INPUT DRIVE..... 1
INPUT GEARBOX..... 3
LABELS - WARNING..... 31/A
LABELS - MODEL..... 53
LEXION MULTI-COUPLING KITS..... 28
LIGHTING..... 32
MECHANICAL INDICATOR..... 54
MOUNTING KIT: JD..... 27
MOUNTING KIT: MF 8680, Gleaner C, 8780, 9690, 9790..... 37
MOUNTING KIT: MF 8570..... 39
MOUNTING KIT: CASE IH (→2500 series combines)..... 35
MOUNTING KIT: CHN, CR, TR CASE AFX..... 25/A
MOUNTING KIT: NEW HOLLAND CNH CX, CR, TR, TX, TC, TF, CASE AFX (2016→)..... 25/B
MOUNTING KIT: LEXION..... 26
MOUNTING KIT: GLEANER "R"..... 51
MULTI-COUPLING KIT: JD 29/A
MULTI-COUPLING KIT: NH 2002→..... 58/A
OUTER DRIVE..... 2
OUTER DRIVE (2016→)..... 2/A
PLASTIC CENTRAL DIVIDERS - (20", 22") 2014.->..... 21/B
PLASTIC CENTRAL DIVIDERS - (30", 28")..... 21/A
PLASTIC HINGED DIVIDERS - (30", 28")..... 23/A
PLASTIC OUTER DIVIDERS..... 22/A
ROTARY DIVIDER..... 55
ROTARY DIVIDER HYDRAULIC..... 56
SHIPPING ACCESSORIES..... 65
SIDE EXTENSION..... 45
SIDE-SHIELDS & DRIP LUBRICATION..... 20
SNAPPING KNIFE-ROLL..... 47
SNAPPING PLATE ADJUSTING RODS..... 19/A
SNAPPING UNIT DRIVE - FOLDABLE..... 15/A
SNAPPING UNIT DRIVE - RIGID..... 14/A
SNAPPING UNIT DRIVE - RIGID..... 14/B
SNAPPING UNIT GEARBOX FOR KNIFE-ROLL ROW UNIT..... 48
SNAPPING UNIT WITH KNIFE ROLLS..... 49
STALK CHOPPER..... 13/A
STUBBLE STOMPER..... 43/A

TORQUE VALUES FOR FASTENERS

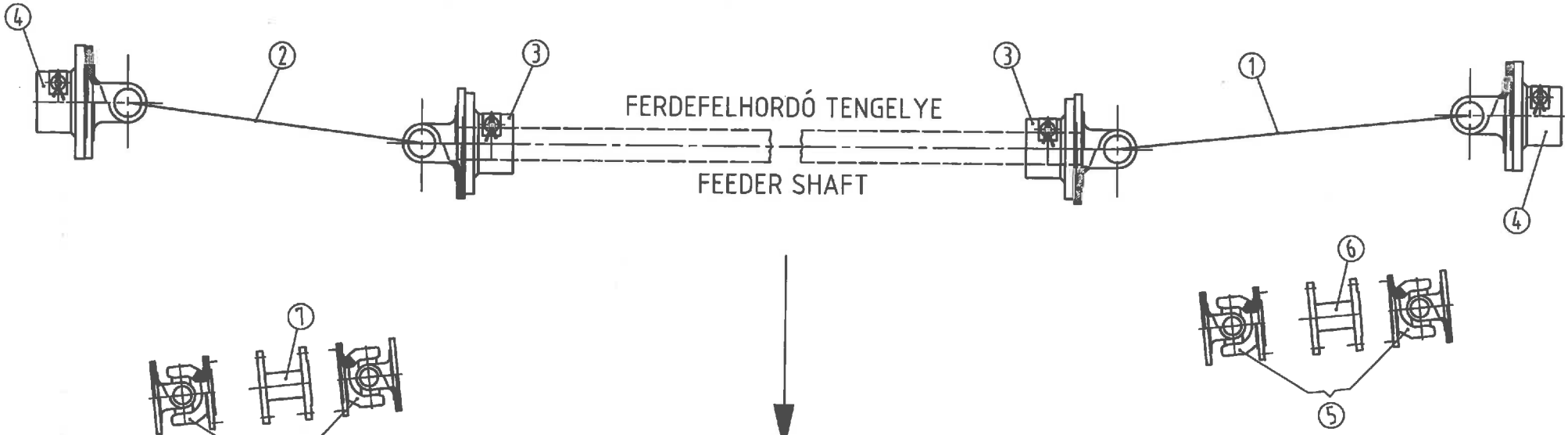

Kombájn típus Type of combine	1/min RPM
Agco, Gleaner R, C, MF8680,9690,9790 fixed	617
Agco, Gleaner R, C, MF8680,9690,9790, variable	608-975
Case-IH 1400-2300 series	500
Case AFX variable	460-690
Claas, Cat Lexion fixed	761
Claas, Cat Lexion variable	508-737
JD fixed	520

Kombájn típus Type of combine	1/min RPM
JD variable	520-785
MF 8570 fixed	475
NH CR variable	402-575
NH TR variable	465-593

2014

INPUT DRIVE

Type of header	Ref.	Description	CLAAS LEXION 440-460, 480, 540-560, 580,600,640-670,770,780 760 ->2011 TUCANO 340, 440-450,470,480	CLAAS LEXION 405-430, 470, 510-530, 570 620,630,740,750, 760 2012-> TUCANO 320-330, 430	NH CX, CS, CSX, CR970-980, Case AFX	NH CX, CS, CSX, CR970-980, Case AFX 2017-től	NH CR 920-940-960 Case AFX 5088-6088-7088 TC 5070	NH CR 920-940-960 Case AFX 5088-6088-7088 TC 5070 2017-től	CASE IH (IHC) 1000-2000	JD 60	MF 8570	MF 8680, MF 8780, 9000 Gleaner C	Gleaner R
6306-70cm	1	PTO drive shaft - LH	1.373.693	-	1.373.699	1.373.693	1.373.699	1.373.693	1.373.703	1.373.692	-	1.373.690	-
	2	PTO drive shaft - RH	1.373.693	-	1.373.699	1.373.693	1.373.699	1.373.693	1.373.703	1.373.692	-	1.373.690	-
6306, 6108, 6208	1	PTO drive shaft - LH	1.373.693	-	1.373.699	1.373.693	1.373.699	1.373.693	1.373.703	1.373.692	1.373.705	1.373.692	1.373.694
	2	PTO drive shaft - RH	1.373.693	-	1.373.699	1.373.693	1.373.699	1.373.693	1.373.703	1.373.692	1.373.705	1.373.692	1.373.692
6308-70cm	1	PTO drive shaft - LH	1.373.694	1.373.694	1.373.700	1.373.694	1.373.700	1.373.694	1.373.704	1.373.694	-	1.373.694	-
	2	PTO drive shaft - RH	1.373.694	1.373.694	1.373.700	1.373.694	1.373.700	1.373.694	1.373.704	1.373.694	-	1.373.694	-
6308	1	PTO drive shaft - LH	1.373.694	1.373.694	1.373.700	1.373.694	1.373.700	1.373.694	1.373.704	1.373.694	-	1.373.694	1.373.695
	2	PTO drive shaft - RH	1.373.694	1.373.694	1.373.700	1.373.694	1.373.700	1.373.694	1.373.704	1.373.694	-	1.373.694	1.373.694
6312-70cm 6312, 6112 , 6316	1	PTO drive shaft - LH	1.373.715	1.373.715	1.373.712	1.373.715	1.373.712	1.373.715	-	1.373.715	-	1.373.715	1.373.954
	2	PTO drive shaft - RH	1.373.715	1.373.715	1.373.712	1.373.715	1.373.712	1.373.715	-	1.373.715	-	1.373.715	1.373.715
6306F, 6308F interior drive	1	PTO drive shaft - LH	1.355.695	1.355.701	1.355.695	1.355.695	1.355.706	1.355.701	1.355.707	-	-	1.319.154	-
	2	PTO drive shaft - RH	1.355.698	1.355.709	1.355.695	1.355.695	1.355.706	1.355.701	1.355.707	-	-	1.319.154	-
	3	Hub assy	1.375.417	-	1.375.415	1.375.417	-	-	-	-	-	1.375.417	-
	4	Hub assy	-	-	1.375.415	1.375.417	-	-	-	-	-	1.375.415	-
	5	Double joint coupling											
	6	Spacer - LH											
	7	Spacer - RH											
6306F 70cm interior drive	1	PTO drive shaft - LH	-	1.315.983	-		1.372.284	1.372.280	-	-	-	-	-
	2	PTO drive shaft - RH	1.319.154	1.355.698	-		1.372.284	1.372.280	-	-	-	-	-
	3	Hub assy	1.375.417	1.375.417	-	-	-	-	-	-	-	-	-
	4	Hub assy	1.375.415	1.355.415	-	-	-	-	-	-	-	-	-
	5	Double joint coupling	1.313.536	-	-	-	-	-	-	-	-	-	-
	6	Spacer	1.327.903	-	-	-	-	-	-	-	-	-	-
6306FE exterior drive	1	PTO drive shaft - LH	1.373.693	-	1.373.699	1.373.693	1.373.699	1.373.693	1.373.703	1.373.692	-	1.373.692	-
	2	PTO drive shaft - RH	1.373.693	-	1.373.699	1.373.693	1.373.699	1.373.693	1.373.703	1.373.692	-	1.373.692	-
6308FE exterior drive	1	PTO drive shaft - LH	1.373.694	1.373.694	1.373.700	1.373.694	-	-	1.373.704	1.373.694	-	1.373.694	-
	2	PTO drive shaft - RH	1.373.694	1.373.694	1.373.700	1.373.694	-	-	1.373.704	1.373.694	-	1.373.694	-
6309F interior drive	1	PTO drive shaft - LH	-	-	1.373.697	1.373.691	-	-	-	1.373.691	-	-	-
	2	PTO drive shaft - RH	-	-	1.373.697	1.373.691	-	-	-	1.373.691	-	-	-
6312F interior drive	1	PTO drive shaft - LH	1.373.952	-	1.373.953	1.373.952	1.373.953	1.373.952	-	1.373.714	-	1.373.714	1.373.715
	2	PTO drive shaft - RH	1.373.952	-	1.373.953	1.373.952	1.373.953	1.373.952	-	1.373.714	-	1.373.714	1.373.714
6 212	1	PTO drive shaft - LH	1.373.952	-	1.373.953	1.373.952	1.373.953	1.373.952	1.373.717	1.373.714	-	1.373.714	1.373.715
	2	PTO drive shaft - RH	1.373.952	-	1.373.953	1.373.952	1.373.953	1.373.952	1.373.717	1.373.714	-	1.373.714	1.373.714

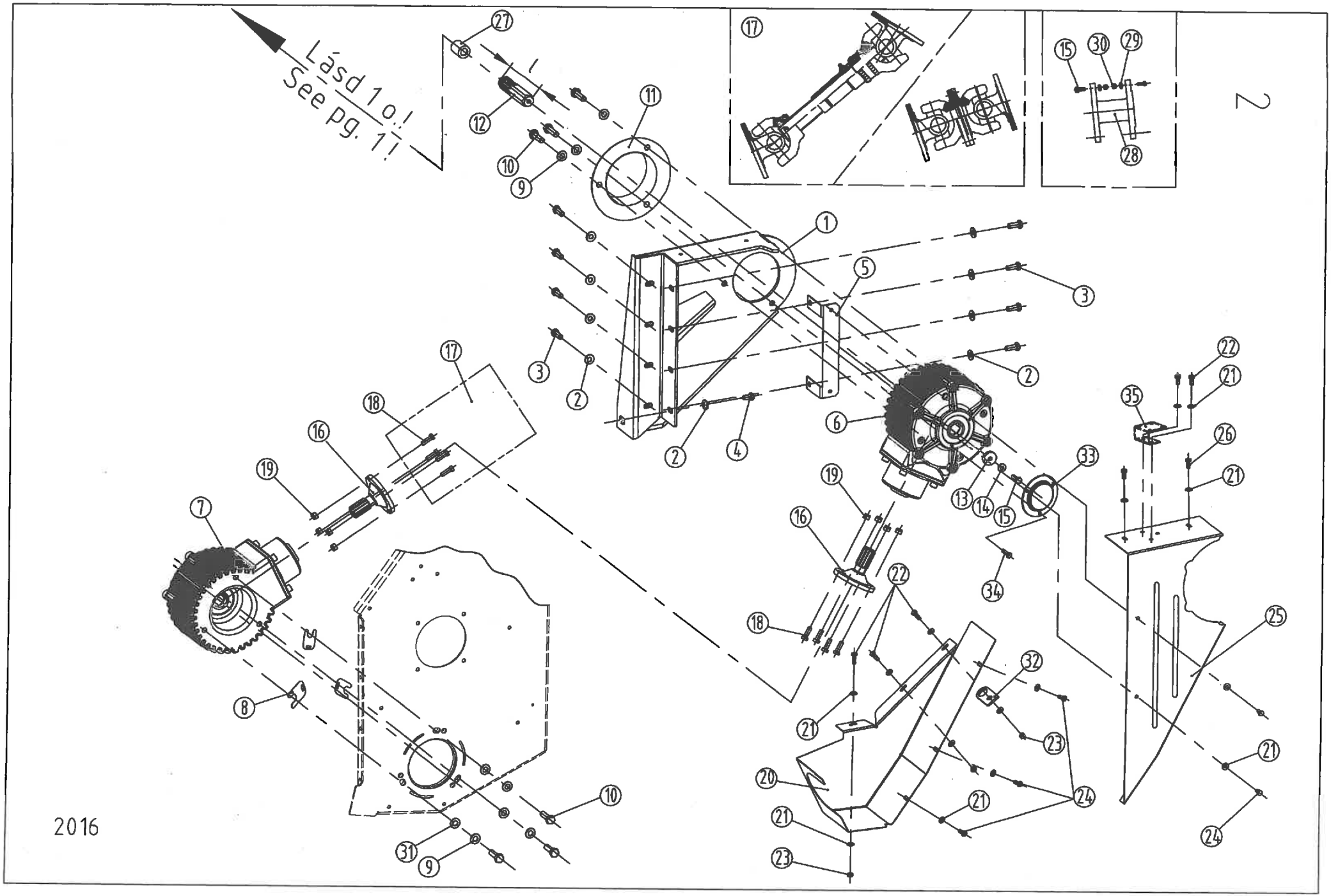
Lásd 10.!
See pg. 11
2016
2

DRIVE

Ref.	Part Number	Description		IHC 1000-2000, JD direct	CNH (VS)	AGCO direct	MF 8570	CAT LEXION (VS), JD (VS)	AGCO (VS)	CAT LEXION (VS), 6108, 6208, 6306, 6308F, 6212, 6312F
1.	1.378.128	Console - LH		-	-	-	-	-	-	1
1.	1.378.129	Console - RH		-	-	-	-	-	-	1
1.	1.378.136	Console - LH *		-	1	-	-	-	-	-
1.	1.378.137	Console - RH *		-	1	-	-	-	-	-
1.	1.378.140	Console - LH		1	1	1	1	1	1	-
1.	1.378.141	Console - RH		1	1	1	1	1	1	-
2.	91623938961	Spring washer - A12		18	18	18	18	18	18	18
3.	79412003066	Hex bolt M12x30 - DIN933/8.8		16	16	16	16	16	16	16
4.	79412002066	Hex bolt M12x20 - DIN933/8.8		2	2	2	2	2	2	2
5.	1.376.446	Angle		2	2	2	2	2	2	2
6.	1.376.068	Input gearbox		-	-	-	-	2	-	2
6.	1.376.070	Input gearbox		2	2	2	2	-	-	-
6.	1.376.069	Input gearbox		-	-	-	2	-	-	-
6.	1.373.898	Input gearbox		-	-	-	-	-	2	-
7.	1.375.069	Output gearbox		2	2	2	2	2	2	2
8.	1.375.752	Shim		10	10	10	10	10	10	10
9.	91623939061	Spring washer - A14		12	12	12	12	12	12	12
10.	79414004566	Hex bolt M14x45 - DIN933/8.8		12	12	12	12	12	12	12
11.	1.375.436	Safety tube		2	2	2	2	2	2	2
12.	1.375.973	Input shaft (l=155)		2	2	2	2	2	2	2
12.	1.377.105	Input shaft (l=205) **(see note below!)**		2	2	2	2	2	2	2
13.	1.378.444	Washer		2	2	2	2	2	2	2
14.	91623938861	Spring washer- A10		2	2	2	2	2	2	2
15.	79410003066	Hex bolt M10x30 - DIN933/8.8		22	22	22	22	22	22	18
15.	79410003066	Hex bolt M10x30 - DIN933/8.8*		-	18	-	-	-	-	-
16.	1.375.974	Shaft		4	4	4	4	4	4	4
17.	1.313.536	Double joint coupling		2	2	2	2	2	2	-
17.	1.355.710	PTO drive shaft		-	-	-	-	-	-	2
18.	1.376.445	Hex bolt - M10x30		4	8	4	4	4	4	-
19.	70710000066	M10 DIN980/8.8 Hex nut		24	24	24	24	24	24	16
20.	1.378.150	Shield - LH		-	-	-	-	-	-	1
20.	1.378.151	Shield - RH		-	-	-	-	-	-	1
20.	1.378.156	Shield - LH		1	1	1	1	1	1	-
20.	1.378.157	Shield - RH		1	1	1	1	1	1	-
20.	1.378.166	Shield - LH*		-	1	-	-	-	-	-
20.	1.378.167	Shield - RH*		-	1	-	-	-	-	-
20.	1.378.396	Shield - LH	2014→ 6108, 6208	-	-	-	-	-	-	1
20.	1.378.397	Shield - RH	2014→ 6108, 6208	-	-	-	-	-	-	1
20.	1.378.392	Shield - LH	2014→ 6108;6208;6112	1	1	1	1	1	1	-
20.	1.378.391	Shield - RH	2014→ 6108;6208;6112	1	1	1	1	1	1	-
20.	1.378.061	Shield - LH	2014→ 6212	-	-	-	-	-	-	1
20.	1.378.062	Shield - RH	2014→ 6212	-	-	-	-	-	-	1
20.	1.378.985	Shield - LH	2014→ 6212;6316	1	1	1	1	1	1	-
20.	1.378.997	Shield - RH	2014→ 6212;6316	1	1	1	1	1	1	-
21.	91623938761	Spring washer - A8		22	22	22	22	22	22	26
22.	79408002566	Hex bolt M8x25 - DIN933/8.8		4	4	4	4	4	4	6
23.	73508000066	Hex nut M8 - DIN934		4	4	4	4	4	4	6
24.	79408001666	Hex bolt M8x16 - DIN933/8.8		8	8	8	8	8	8	10
25.	1.378.148	Shield - LH		-	-	-	-	-	-	1
25.	1.378.149	Shield - RH		-	-	-	-	-	-	1
25.	1.378.154	Shield - LH		1	1	1	1	1	1	-
25.	1.378.155	Shield - RH		1	1	1	1	1	1	-
25.	1.378.164	Shield - LH*		-	1	-	-	-	-	-
25.	1.378.165	Shield - RH*		-	1	-	-	-	-	-
25.	1.379.063	Shield - LH	2014→ 6212	-	-	-	-	-	-	1
25.	1.379.064	Shield - RH	2014→ 6212	-	-	-	-	-	-	1
25.	1.378.987	Shield - LH	2014→ 6212;6316	1	1	1	1	1	1	-
25.	1.378.999	Shield - RH	2014→ 6212;6316	1	1	1	1	1	1	-
26.	79408002066	Hex bolt M8x20 - DIN933/8.8		6	6	6	6	6	6	4
27.	1.377.106	Spacer **(see note below!)**		2	2	2	2	2	2	2
28.	1.319.873	Distance piece	2010 - 2015.	-	2	-	-	-	-	-
29.	72210000060	Spring washer M10 - DIN128/A		-	16	-	-	-	-	-
30.	73510000066	Hex nut M10 - DIN934		-	16	-	-	-	-	-
31.	1.378.760	Washer		6	6	6	6	6	6	6
32.	1.379.146	Loop		2	2	2	2	2	2	2
33.	1.379.634	Cover	2014→2015.	2	2	2	2	2	2	2
33.	1.372.314	Cover	2016→	2	2	2	2	2	2	2
34.	79406001066	Hex bolt M6x10 - DIN933/8.8	2014→	6	6	6	6	6	6	6

Note: Application of item 8 is depends on the backlash of the gears, quantities are not depend on the type of corn head.
For item 12 & 27: 1.377.105 and 1.377.106 in case of (6308EF) folding machines with exterior drive only.
For item 31: for fix and folding machines with exterior drive only.
* marked items are used for " 6308F mounted to CNH combines" only.

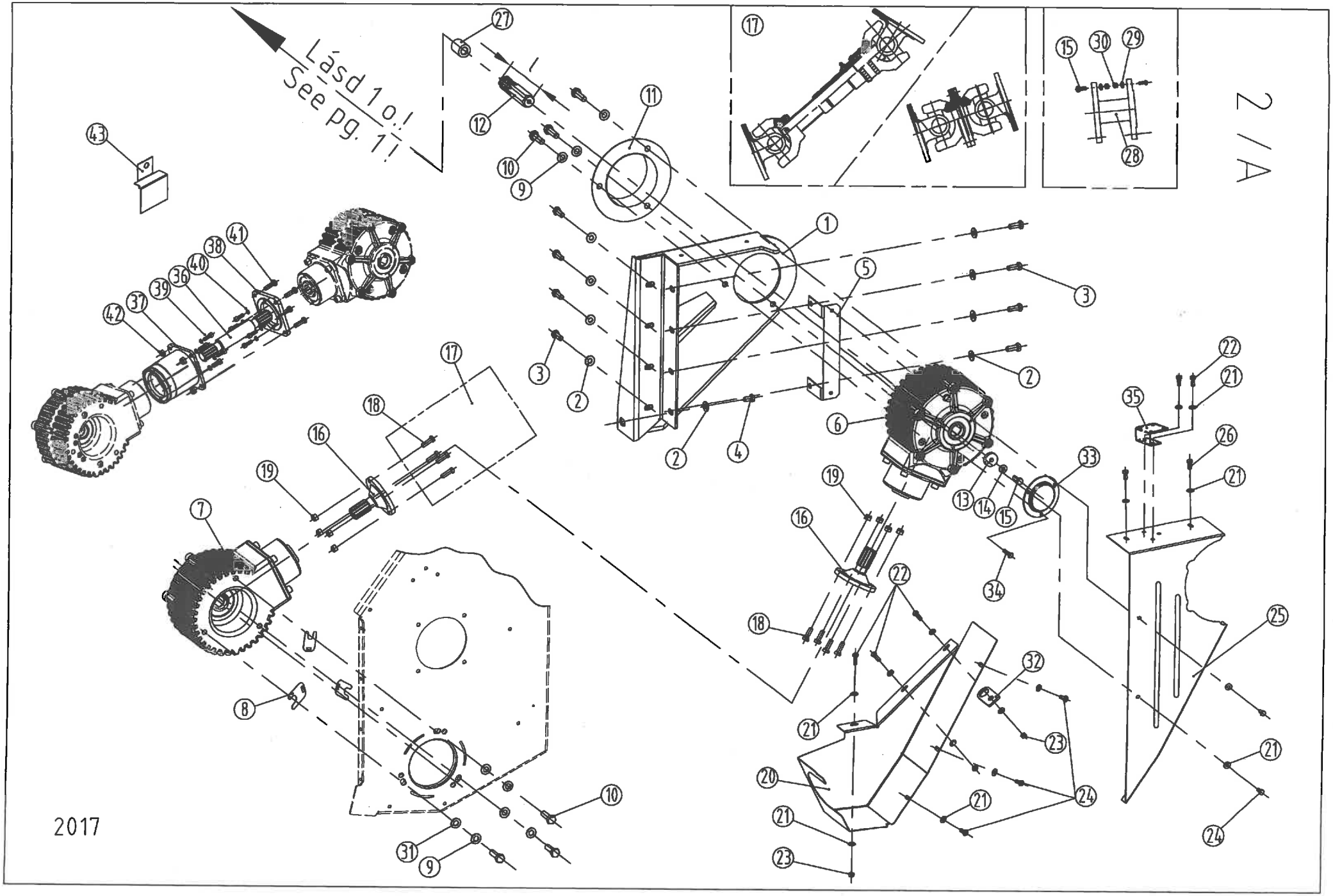
Lásd 1 o.!
See pg. 1!
2 / A
2017

DRIVE (2016 →)

Ref.	Part Number	Description		Case IH 1000-2000, JD direct	CNH (VS)	AGCO direct	MF 8570	CAT LEXION (VS), JD (VS)	AGCO (VS)	CAT LEXION (VS), 6108, 6208, 6306, 6306F 6308F, 6212, 6312F
1.	1.378.128	Console - LH		-	-	-	-	-	-	1
1.	1.378.129	Console - RH		-	-	-	-	-	-	1
1.	1.378.140	Console - LH		1	1	1	1	1	1	-
1.	1.378.141	Console - RH		1	1	1	1	1	1	-
1.*	1.372.245	Console - LH		-	1	-	-	-	-	-
1.*	1.372.246	Console - RH		-	1	-	-	-	-	-
2.	91623938961	Spring washer - A12		16	16	16	16	16	16	16
3.	79412003066	Hex bolt M12x30 - DIN933/8.8		16	16	16	16	16	16	16
4.	79412002066	Hex bolt M12x20 - DIN933/8.8		2	2	2	2	2	2	2
5.	1.376.446	Angle		2	2	2	2	2	2	2
6.	1.376.070	Input gearbox		2	2	2	-	-	-	-
6.	1.376.068	Input gearbox		-	-	-	-	2	-	2
6.	1.376.069	Input gearbox		-	-	-	2	-	-	-
6.	1.373.898	Input gearbox		-	-	-	-	-	2	-
7.	1.376.069	Output gearbox		2	2	2	-	2	2	2
7.	1.376.068	Output gearbox		-	-	-	2	-	-	-
8.	1.376.752	Shim		10	10	10	10	10	10	10
9.	91623939061	Spring washer - A14		12	12	12	12	12	12	12
10.	79414004566	Hex bolt M14x45 - DIN933/8.8		12	12	12	12	12	12	12
11.	1.376.436	Safety tube		2	2	2	2	2	2	2
12.	1.375.973	Input shaft (l=155)		2	2	2	2	2	2	2
12.	1.377.105	Input shaft (l=205) **(see note below!)**		2	2	2	2	2	2	2
12.**	1.372.371	Input shaft (l=139,5) **(see note below!)**		2	-	-	-	2	-	-
13.	1.376.444	Washer		2	2	2	2	2	2	2
14.	91623938861	Spring washer- A10		2	2	2	2	2	2	2
15.	79410003066	Hex bolt M10x30 - DIN933/8.8		22	22	22	22	22	22	18
15.	79410003066	Hex bolt M10x30 - DIN933/8.8		-	18	-	-	-	-	-
16.	1.375.974	Shaft		4	4	4	4	4	4	4
17.	1.313.536	Double joint coupling		2	2	2	2	2	2	-
17.	1.355.710	PTO drive shaft		-	-	-	-	-	-	2
18.	1.376.445	Hex bolt - M10x30		4	8	4	4	4	4	-
19.	70710000066	M10 DIN980/8.8 Hex nut		24	24	24	24	24	24	16
20.*	1.372.248	Shield - LH		-	1	-	-	-	-	-
20.*	1.372.251	Shield - RH		-	1	-	-	-	-	-
20.	1.379.396	Shield - LH	6306, 6108, 6208,6308, 6112, 6306F, 6308F	-	-	-	-	-	-	1
20.	1.379.397	Shield - RH	6306, 6108, 6208,6308, 6112, 6306F, 6308F	-	-	-	-	-	-	1
20.	1.379.392	Shield - LH	6306, 6108, 6208,6308, 6112, 6306F, 6308F	1	1	1	1	1	1	-
20.	1.379.391	Shield - RH	6306, 6108, 6208,6308, 6112, 6306F, 6308F	1	1	1	1	1	1	-
20.	1.379.060	Shield - LH	6212, 6312, 6316	-	-	-	-	-	-	1
20.	1.379.062	Shield - RH	6212, 6312, 6316	-	-	-	-	-	-	1
20.	1.378.985	Shield - LH	6212, 6312, 6316	1	1	1	1	1	1	-
20.	1.378.997	Shield - RH	6212, 6312, 6316	1	1	1	1	1	1	-
21.	91623938761	Spring washer - A8		22	22	22	22	22	22	26
22.	79408002566	Hex bolt M8x25 - DIN933/8.8		4	4	4	4	4	4	6
23.	73508000066	Hex nut M8 - DIN934		4	4	4	4	4	4	6
24.	79408001666	Hex bolt M8x16 - DIN933/8.8		8	8	8	8	8	8	10
25.*	1.372.247	Shield - LH		-	1	-	-	-	-	-
25.*	1.372.250	Shield - RH		-	1	-	-	-	-	-
25.	1.378.148	Shield - LH	6306, 6108, 6208,6308, 6112, 6306F, 6308F	-	-	-	-	-	-	1
25.	1.378.149	Shield - RH	6306, 6108, 6208,6308, 6112, 6306F, 6308F	-	-	-	-	-	-	1
25.	1.378.154	Shield - LH	6306, 6108, 6208,6308, 6112, 6306F, 6308F	1	1	1	1	1	1	-
25.	1.378.155	Shield - RH	6306, 6108, 6208,6308, 6112, 6306F, 6308F	1	1	1	1	1	1	-
25.	1.379.063	Shield - LH	6212, 6312, 6316	-	-	-	-	-	-	1
25.	1.379.064	Shield - RH	6212, 6312, 6316	-	-	-	-	-	-	1
25.	1.378.987	Shield - LH	6212, 6312, 6316	1	1	1	1	1	1	-
25.	1.378.999	Shield - RH	6212, 6312, 6316	1	1	1	1	1	1	-
26.	79408002066	Hex bolt M8x20 - DIN933/8.8		6	6	6	6	6	6	4
27.	1.377.106	Spacer **(see note below!)**		2	2	2	2	2	2	2
28.*	1.327.806	Distance piece		-	2	-	-	-	-	-
29.*	72210000060	Spring washer M10 - DIN128/A		-	16	-	-	-	-	-
30.*	73510000066	Hex nut M10 - DIN934		-	16	-	-	-	-	-
31.	1.378.760	Washer		6	6	6	6	6	6	6
32.	1.379.146	Loop		2	2	2	2	2	2	2
33.	1.372.314	Cover		2	2	2	2	2	2	2
34.	79406001066	Hex bolt M6x10 - DIN933/8.8		6	6	6	6	6	6	6
35.	1.372.315	Holder		-	1	-	-	-	-	-

Note: Application of item 8 is depends on the backlash of the gears, quantities are not depend on the type of corn head.
For item 12 & 27: 1.377.105 and 1.377.106 in case of (6308EF) folding machines with exterior drive only.
* marked items are used for " 6308F mounted to CNH combines" only.
** For 6306F & 6308F Corn Heads mounted to JD combines (except Hill Master) with lateral tilt function only.

3

Rajzszám Part. No.	Áttétel Ratio
1.376.068	27-15
1.376.069	27-12
1.376.070	27-11
1.373.898	27-18

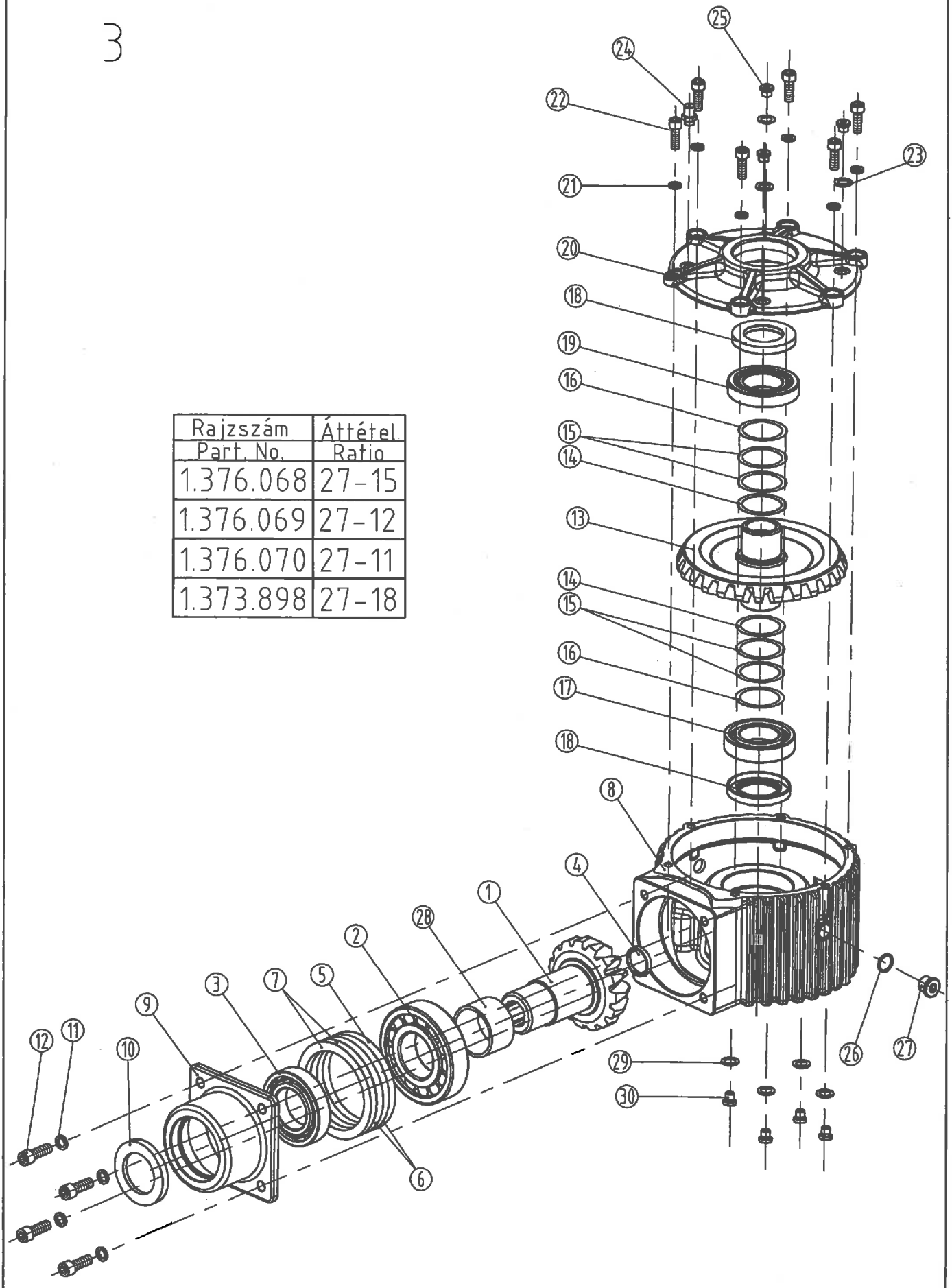

2016

INPUT GEARBOX

Ref.	Part Number	Description	All models
1.	1.376.073	Drive pinion 15T	2
1.	1.376.077	Drive pinion 12T	2
1.	1.376.075	Drive pinion 11T	2
1.	1.373.870	Drive pinion 18T	2
2.	87000131262	Bearing NUP312	4
3.	87010621114	Bearing 6211-2RS	4
4.	85803800700	Closing cup (38x7)	4
5.	71610513001	Shim 105x130x0.1 - DIN988	4
6.	71610513002	Shim 105x130x0.2 - DIN988	8
7.	71610513005	Shim 105x130x0.5 - DIN988	8
8.	1.376.071	Gearbox housing	4
9.	1.376.079	Bearing housing	4
10.	85805508500	Seal 55x85x10	4
11.	71812000060	Spring washer M12 - DIN7980	16
12.	80212035063	Hex socket head cap bolt M12x35 - DIN912/10.9	16
13.	1.376.074	Bevel-gear 27T (gearbox: 1.376.068)	2
13.	1.376.078	Bevel-gear 27T (gearbox: 1.376.069)	2
13.	1.376.076	Bevel-gear 27T (gearbox: 1.376.070)	2
13.	1.373.871	Bevel-gear 27T (gearbox: 1.373.898)	2
14.	71650062010	Shim 50x62x0.1 - DIN988	8
15.	71650062020	Shim 50x62x0.2 - DIN988	16
16.	71650062050	Shim 50x62x0.5 - DIN988	8
17.	87000621010	Bearing 6210	4
18.	85805080100	Seal 50x80x10	8
19.	87013021001	Bearing 30210 - DIN720	4
20.	1.376.072	Cover	4
21.	71810000060	Spring washer M10 - DIN7980	24
22.	80310003063	Hex socket head cap bolt M10x30 - DIN6912/10.9	24
23.	05200001200	Copper washer M12 - DIN7603	20
24.	1.309.247	Breather	4
25.	1.376.783 - M12x1.5	Closing screw	20
26.	05200200024	Copper washer 20x24x1.5 - DIN7603	8
27.	79202001560	Closing screw M20x1.5 - DIN908	8
28.	1.377.265	Spacer	4
29.	05200000800	Copper washer 8x12x1 - DIN7603	16
30.	79200800160	Closing screw M8x1 - DIN908	16

Note: application of item 1 and 13 depends on the type of combine.
application of shims depends on the backlash of the gears.

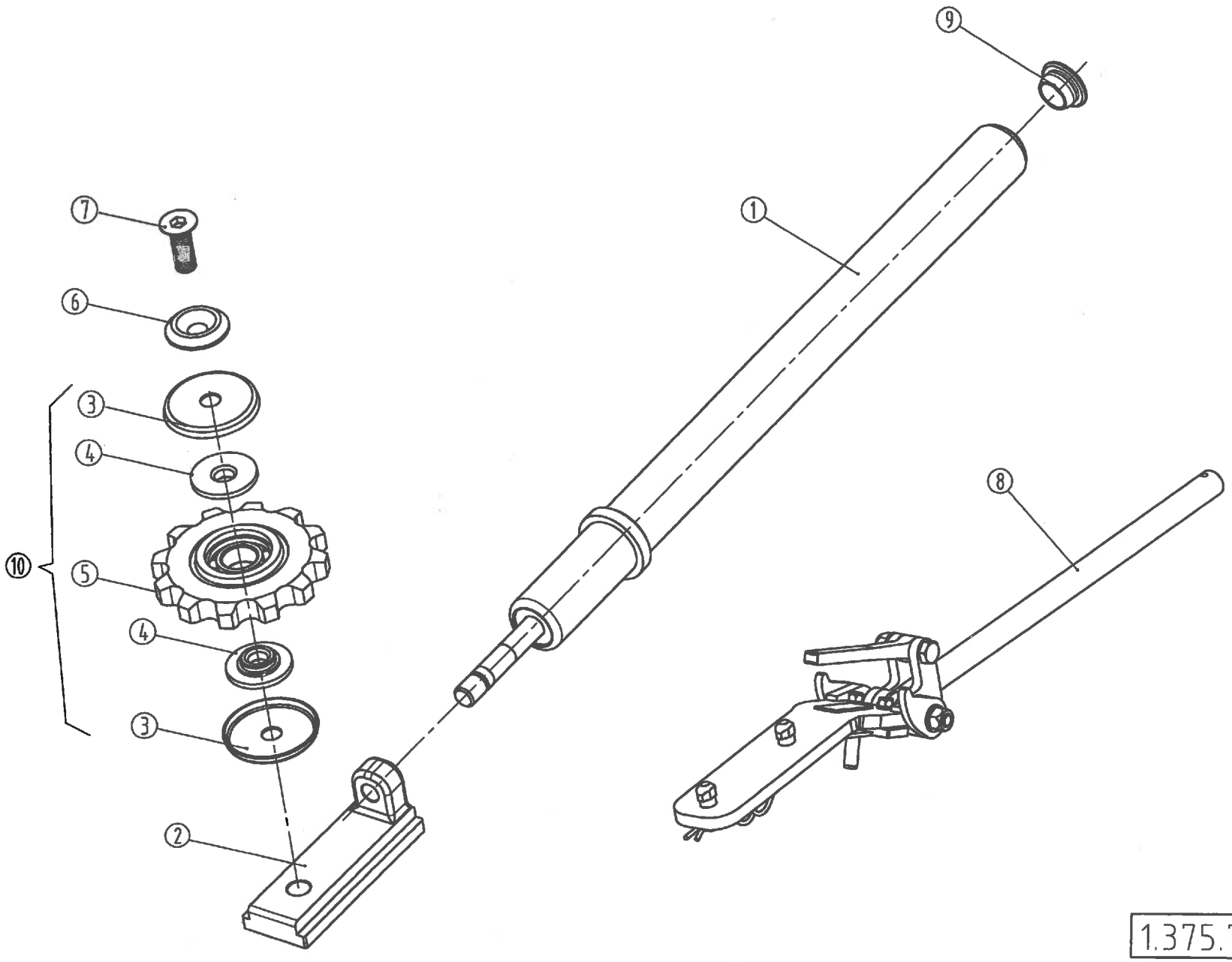

2013

1.375.755

GATHERING CHAIN ADJUSTER

Ref.	Part Number	Description		6R	8R	9R	12R	16R
1.	1.375.756	Compressed coiled spring		12	16	18	24	32
2.	1.375.760	Slide		12	16	18	24	32
3.	1.375.761	Labyrinth		24	32	36	48	64
4.	1.379.082	Bushing		24	32	36	48	64
5.	1.379.081	Sprocket assy		12	16	18	24	32
6.	1.375.758	Washer		12	16	18	24	32
7.	80414005063	Hex socket countersunk-head bolt M14x50 - DIN7991/10.9		12	16	18	24	32
8.	2.405.227	Gathering chain installation instrument		1	1	1	1	1
9.	1.377.268	Plug		12	16	18	24	32
10.	1.379.153	Sprocket pre-assy.		12	16	18	24	3

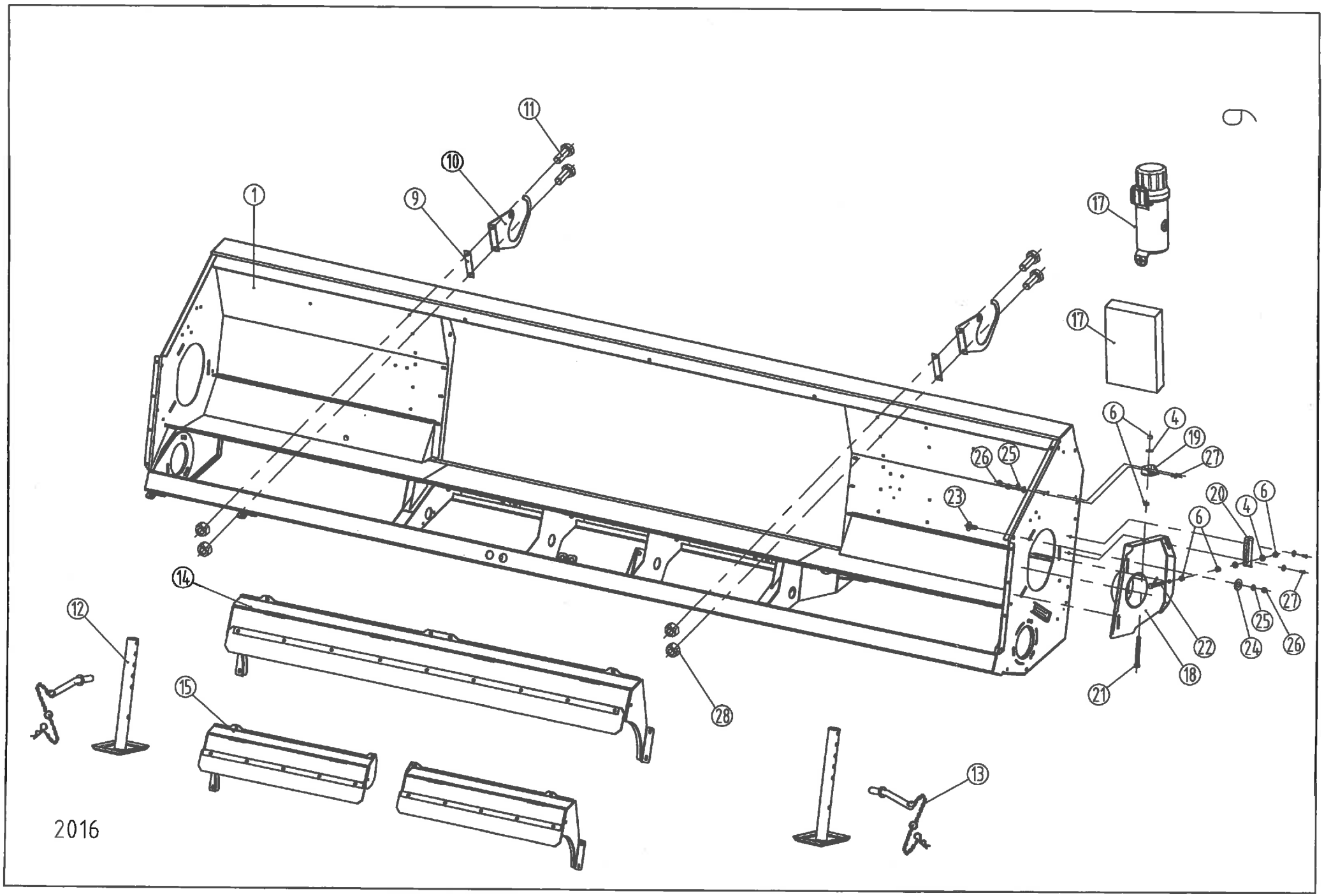
1
9
10
11
17
17
6
4
19
27
26
25
23
20
4
6
6
14
12
15
28
22
18
21
24
25
26
27
13
2016

FRAME ASSEMBLY - RIGID

Ref.	Part Number	Description		6306 70	6306	6108	6208	6308 70	6308	6112	6212	6312 70	6312	6316
1.	1.378.443	Frame assy		1	-	-	-	-	-	-	-	-	-	-
1.	1.379.155	Frame assy	2016→	1	-	-	-	-	-	-	-	-	-	-
1.	1.378.444	Frame assy		-	1	-	-	-	-	-	-	-	-	-
1.	1.379.156	Frame assy	2016→	-	1	-	-	-	-	-	-	-	-	-
1.	1.373.100	Frame assy	2015→	-	-	1	-	-	-	-	-	-	-	-
1.	1.373.070	Frame assy	2015→	-	-	-	1	-	-	-	-	-	-	-
1.	1.378.531	Frame assy		-	-	-	-	1	-	-	-	-	-	-
1.	1.379.157	Frame assy	2016→	-	-	-	-	1	-	-	-	-	-	-
1.	1.378.532	Frame assy		-	-	-	-	-	1	-	-	-	-	-
1.	1.379.158	Frame assy	2016→	-	-	-	-	-	1	-	-	-	-	-
1.	1.379.650	Frame assy	2014→	-	-	-	-	-	-	1	-	-	-	-
1.	1.379.600	Frame assy	2014→	-	-	-	-	-	-	-	1	-	-	-
1.	1.378.533	Frame assy		-	-	-	-	-	-	-	-	1	-	-
1.	1.379.159	Frame assy	2016→	-	-	-	-	-	-	-	-	1	-	-
1.	1.378.534	Frame assy		-	-	-	-	-	-	-	-	-	1	-
1.	1.378.900	Frame assy	2016→	-	-	-	-	-	-	-	-	-	1	-
1.	1.378.866	Frame assy	2013→	-	-	-	-	-	-	-	-	-	-	1
9.	1.322.037	Plate		2	2	2	2	2	2	2	2	2	2	2
10.	1.354.037	PTO shaft support		2	2	2	2	2	2	2	2	2	2	2
11.	79408002066	Hex bolt M8x20 - DIN933/8.8		4	4	4	4	4	4	4	4	4	4	4
12.	1.352.495	Parking stand assy.		2	2	2	2	2	2	2	2	2	2	2
13.	25.541.14.50.00	Pin assembly		2	2	2	2	2	2	2	2	2	2	2
14.	1.378.685	Hood assy		1	1	-	-	1	1	-	-	-	-	-
14.	1.379.440	Hood assy	2014→	1	1	1	1	1	1	1	-	-	-	-
15.	1.378.689	Hood assy - LH		-	-	-	-	-	-	-	-	1	1	-
15.	1.378.988	Hood assy - LH	2013→	-	-	-	-	-	-	-	1	1	1	1
15.	1.378.690	Hood assy - RH		-	-	-	-	-	-	-	-	1	1	-
15.	1.378.989	Hood assy - RH	2013→	-	-	-	-	-	-	-	1	1	1	1
17.	1.329.720	Storage container	→2015	1	1	1	1	1	1	1	1	1	1	1
17.	1.373.751	Storage container	2016→	1	1	1	1	1	1	1	1	1	1	1
18.	1.377.453	Bracket welded - LH		1	1	1	1	1	1	1	1	1	1	1
18.	1.377.454	Bracket welded - RH		1	1	1	1	1	1	1	1	1	1	1
19.	1.377.460	Bracket - LH		1	1	1	1	1	1	1	1	1	1	1
20.	1.377.461	Bracket - RH		1	1	1	1	1	1	1	1	1	1	1
21.	79412012066	Hex bolt M12x120 - DIN933/8.8		2	2	2	2	2	2	2	2	2	2	2
22.	79412009066	Hex bolt M12x90 - DIN933/8.8		2	2	2	2	2	2	2	2	2	2	2
23.	76308002066	Carriage bolt M8x20 - DIN603/8.8		6	6	6	6	6	6	6	6	6	6	6
24.	1.314.099	Washer		6	6	6	6	6	6	6	6	6	6	6
25.	91623938761	Spring washer A8		14	14	14	14	14	14	14	14	14	14	14
26.	73508000066	Hex nut M8 - DIN934		14	14	14	14	14	14	14	14	14	14	14
27.	78208002063	Hex socket button-head bolt M8x20 - ISO7380/10.9		8	8	8	8	8	8	8	8	8	8	8
28.	70708000066	Lock nut M8 - DIN980		4	4	4	4	4	4	4	4	4	4	4

2016-> : only for machines with higher serial number than xxxxx16xxx

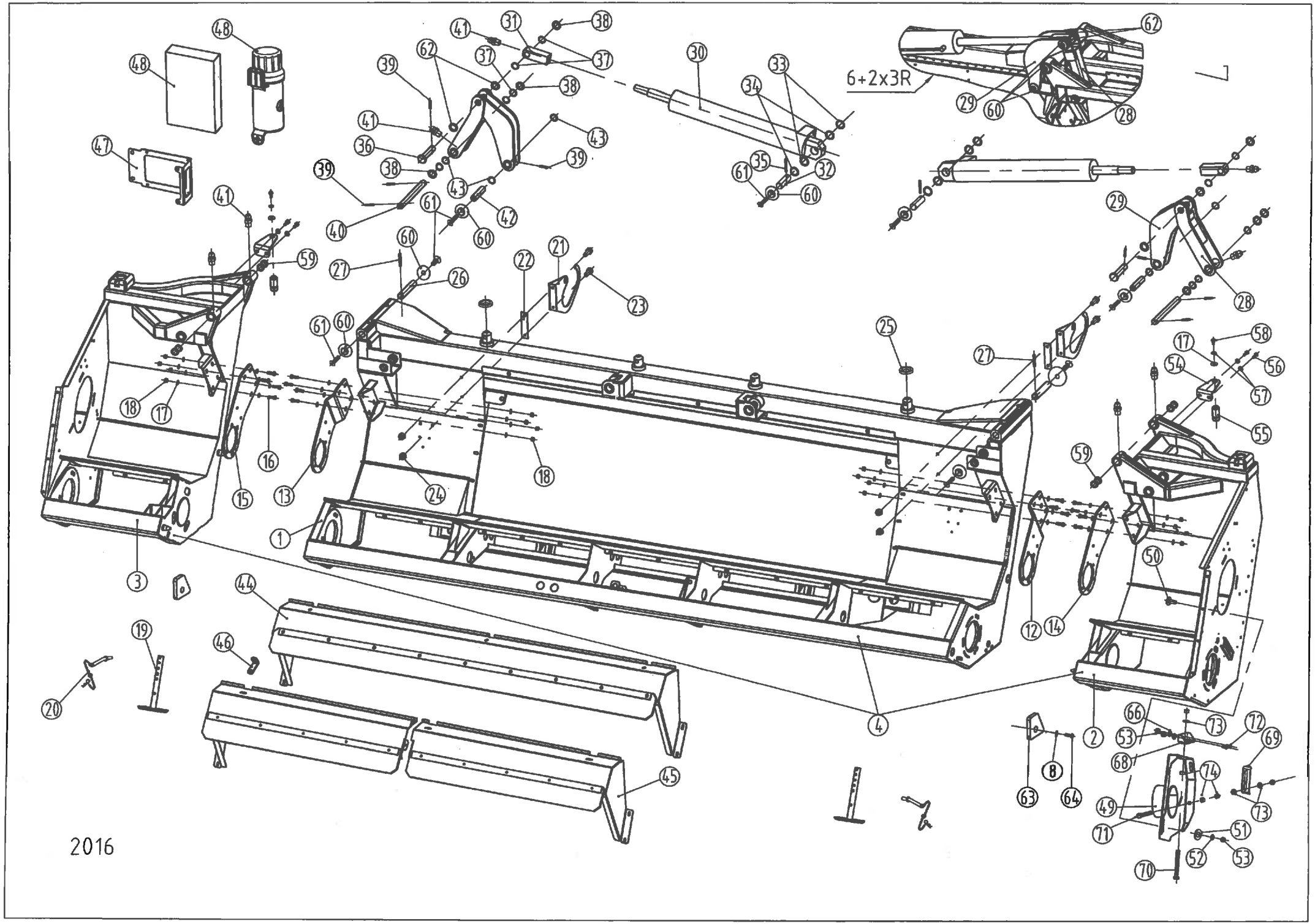
6+2x3R
2016

FRAME ASSEMBLY - FOLDABLE

Ref.	Part Number	Description		6306F	6308F	6309F	6312-70F	6312F
1.	1.377.905	Central frame assy	→2015	1	1	-	-	-
1.	1.373.662	Central frame assy	2016→	1	1	-	-	-
1.	1.378.179	Central frame assy	→2015	-	-	-	-	1
1.	1.373.778	Central frame assy	2016→	-	-	-	-	1
1.	1.378.076	Central frame assy		-	-	1	-	-
1.	1.373.827	Central frame assy		-	-	-	1	-
2.	1.378.105	Extension frame assy - LH	→2015	1	-	-	-	-
2.	1.379.957	Extension frame assy - LH	2016→	1	-	-	-	-
2.	1.377.991	Extension frame assy - LH	→2015	-	1	1	-	-
2.	1.373.512	Extension frame assy - LH	2016→	-	1	-	-	-
2.	1.378.226	Extension frame assy - LH	→2015	-	-	-	-	1
2.	1.373.779	Extension frame assy - LH	2016→	-	-	-	-	1
2.	1.373.828	Extension frame assy - LH		-	-	-	1	-
3.	1.378.106	Extension frame assy - RH	→2015	1	-	-	-	-
3.	1.379.958	Extension frame assy - RH	2016→	1	-	-	-	-
3.	1.377.992	Extension frame assy - RH	→2015	-	1	1	-	-
3.	1.373.513	Extension frame assy - RH	2016→	-	1	-	-	-
3.	1.378.227	Extension frame assy - RH	→2015	-	-	-	-	1
3.	1.373.780	Extension frame assy - RH	2016→	-	-	-	-	1
3.	1.373.829	Extension frame assy - RH		-	-	-	1	-
4.	1.378.098	Frame assy - complete		1	-	-	-	-
4.	1.373.663	Frame assy - complete	2016→	1	-	-	-	-
4.	1.378.100	Frame assy - complete		-	1	-	-	-
4.	1.373.664	Frame assy - complete	2016→	-	1	-	-	-
4.	1.378.173	Frame assy - complete		-	-	1	-	-
4.	1.378.199	Frame assy - complete		-	-	-	-	1
4.	1.373.825	Frame assy - complete	2016→	-	-	-	-	1
4.	1.373.826	Frame assy - complete		-	-	-	1	-
12.	1.376.371	Console - LH		1	1	1	1	1
13.	1.376.372	Console - RH		1	1	1	1	1
14.	1.376.373	Console - LH		1	1	1	1	1
15.	1.376.374	Console - RH		1	1	1	1	1
16.	79410003066	Hex bolt M10x30 - DIN933/8.8		16	16	16	16	16
17.	96702375920	Washer - M10		34	34	34	34	34
18.	70710000066	Lock nut M10 - DIN980		16	16	16	16	16
19.	1.352.495	Support assy		2	2	2	2	2
20.	25541145000	Pin assembly		2	2	2	2	2
21.	1.354.037	PTO shaft support		-	-	2	2	2
22.	1.322.037	Flat		-	-	2	2	2
23.	79408002066	Hex bolt M8x20 - DIN933/8.8		-	-	4	4	4
24.	70708000066	Lock nut M8 - DIN980		-	-	4	4	4
25.	1.376.448	Rubber washer		2	2	2	2	2
26.	1.378.126	Pin l=472		2	2	2	2	2
27.	73010006001	Spring pin 10x60 - DIN1481		4	4	4	4	4
27.	73006006001	Spring pin 6x60 - DIN1481		4	4	4	4	4
28.	1.376.385	Arm		2	-	-	-	-
28.	1.375.138	Arm		-	2	2	2	2
29.	1.376.382	Arm		2	-	-	-	-
29.	1.375.134	Arm		-	2	2	-	2
29.	1.378.409	Arm - LH		-	-	-	1	1

Note: Items 54 - 58 are needed only for exterior drive with lower position. Application of shims if necessary.
2016-> : only for machines with higher serial number than xxxxx16xxx

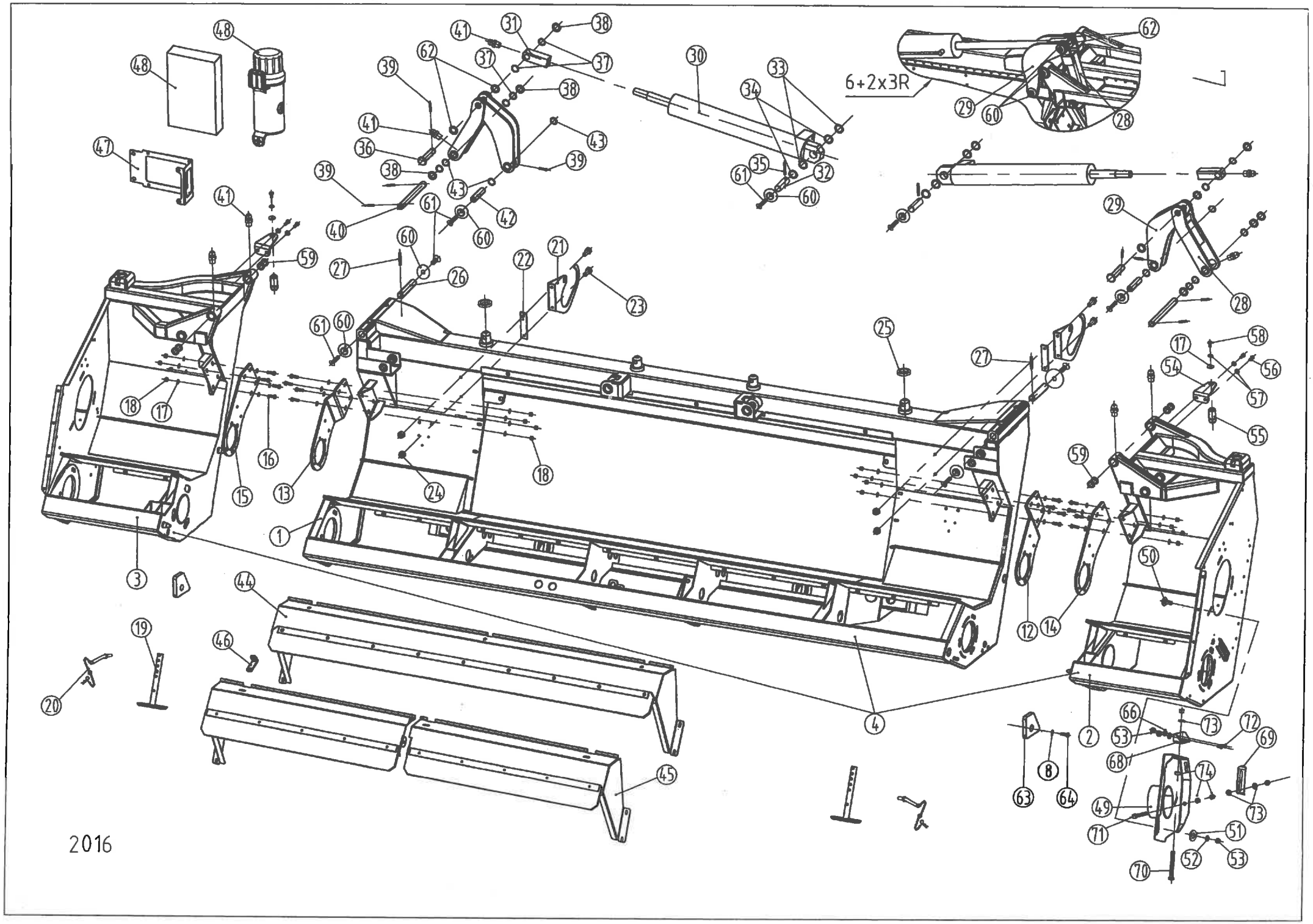
6+2x3R
2016

FRAME ASSEMBLY - FOLDABLE

Ref.	Part Number	Description		6306F	6308F	6309F	6312-70F	6312F
29.	1.378.410	Arm - RH		-	-	-	1	1
30.	1.376.278	Hydraulic cylinder		2	-	-		-
30.	1.375.144	Hydraulic cylinder		-	2	2	2	2
30.	1.378.415	Hydraulic cylinder		-	-	-	2	2
31.	1.376.573	Fitting		2	2	2	-	-
31.	1.378.475	Fitting		-	-	-	2	2
32.	1.375.182	Pin		2	2	2	2	2
33.	71630042050	Shim 30x42x0.5 - DIN988		4	4	4	4	4
34.	71630042100	Shim 30x42x1 - DIN988		4	4	4	4	4
35.	73008006001	Spring pin 8x60 - DIN1481		2	2	2	2	2
36.	1.377.100	Pin		2	2	2	2	2
36.	1.378.411	Pin		-	-	-	2	2
37.	71625035100	Shim 25x35x1 - DIN988		8	8	8	8	8
38.	1.375.181	Washer		6	6	6	6	4
39.	73008004006	Spring pin 8x40 - DIN1481		8	8	8	8	6
40.	1.376.565	Pin		2	2	2	2	2
41.	70006001062	Grease nipple M6x1		8	8	8	8	8
42.	1.376.564	Pin		2	2	2	-	-
42.	1.378.403	Pin		-	-	-	2	2
43.	71625035050	Shim 25x35x0.5 - DIN988		8	8	8	8	8
44.	1.378.685	Hood assy		-	-	1	-	-
44.	1.379.440	Hood assy	2016→	1	1	-	-	-
45.	1.378.689	Hood assy - LH		-	-	-	1	1
45.	1.372.231	Hood assy - LH	2016→	-	-	-	1	1
45.	1.378.690	Hood assy - RH		-	-	-	1	1
45.	1.372.232	Hood assy - RH	2016→	-	-	-	1	1
46.	1.377.005	Supporting angle		3	3	-	3	3
47.	1.377.222	Bracket		1	-	-	-	-
47.	1.379.141	Bracket	2013→	1	1	-	-	-
48.	1.329.720	Storage container	→2015	1	1	1	1	1
48.	1.373.751	Storage container	2016→	1	1	1	1	1
49.	1.377.453	Bracket welded - LH		1	1	1	1	1
49.	1.377.454	Bracket welded - RH		1	1	1	1	1
50.	76308002066	Carriage bolt M8x20 - DIN603/8.8		6	6	6	6	6
51.	1.314.099	Washer		6	6	6	6	6
52.	91623938861	Spring washer		6	6	6	6	6
53.	73508000066	Hex nut M8 - DIN934		14	14	14	14	14
54.	1.377.102	Holder- JD,MF,CNH, Gleaner		2	2	-	-	-
54.	1.379.299	Holder - Lexion		2	2	-	-	-
55.	1.319.455	Pin - JD,MF, Gleaner, Lexion		2	2	-	-	-
55.	1.318.338	Pin - CNH		2	2	-	-	-
55.	1.373.742	Pin - IHC		2	2	-	-	-
56.	79410002566	Hex bolt M10x25 - DIN933/8.8		4	4	-	-	-
57.	91623938861	Spring washer A10		6	6	-	-	-
58.	79410002066	Hex bolt M10x20 - DIN933/8.8		2	2	-	-	-
59.	97909349340	Bushing 40x44x30		8	8	8	8	8
60.	1.375.019	Washer		6	6	6	12	12
61.	80401002563	TORX socket countersunk-head bolt M10x25 - DIN7991/10.9		6	6	6	12	12
-	Loctite 243	Threadlocking agent						
62.	1.378.407	Spacer		-	-	-	4	4
63.	1.378.679	Plate		2	2	2	2	2
64.	79412004566	Hex bolt M 12x45 - DIN933/8.8		2	2	2	2	2
66.	91623938761	Spring washer A8	2016→	8	8	8	8	8
68.	1.377.460	Bracket - LH	2016→	2	2	2	2	2
69.	1.377.461	Bracket - RH	2016→	2	2	2	2	2
70.	79412012066	Hex bolt M12x120 - DIN933/8.8	2016→	4	4	4	4	4
71.	79412009066	Hex bolt M12x90 - DIN933/8.8	2016→	4	4	4	4	4
72.	78208002063	Hex socket button-head bolt M8x20-ISO7380/10.9	2016→	8	8	8	8	8
73.	71412000060	Washer M12 - DIN125 - 200HV	2016→	6	6	6	6	6
74.	73512000066	Hex nut M12 - DIN934	2016→	10	10	10	10	10

Note: Items 54 - 58 are needed only for exterior drive with lower position. Application of shims if necessary.
2016-> : only for machines with higher serial number than xxxxx16xxx

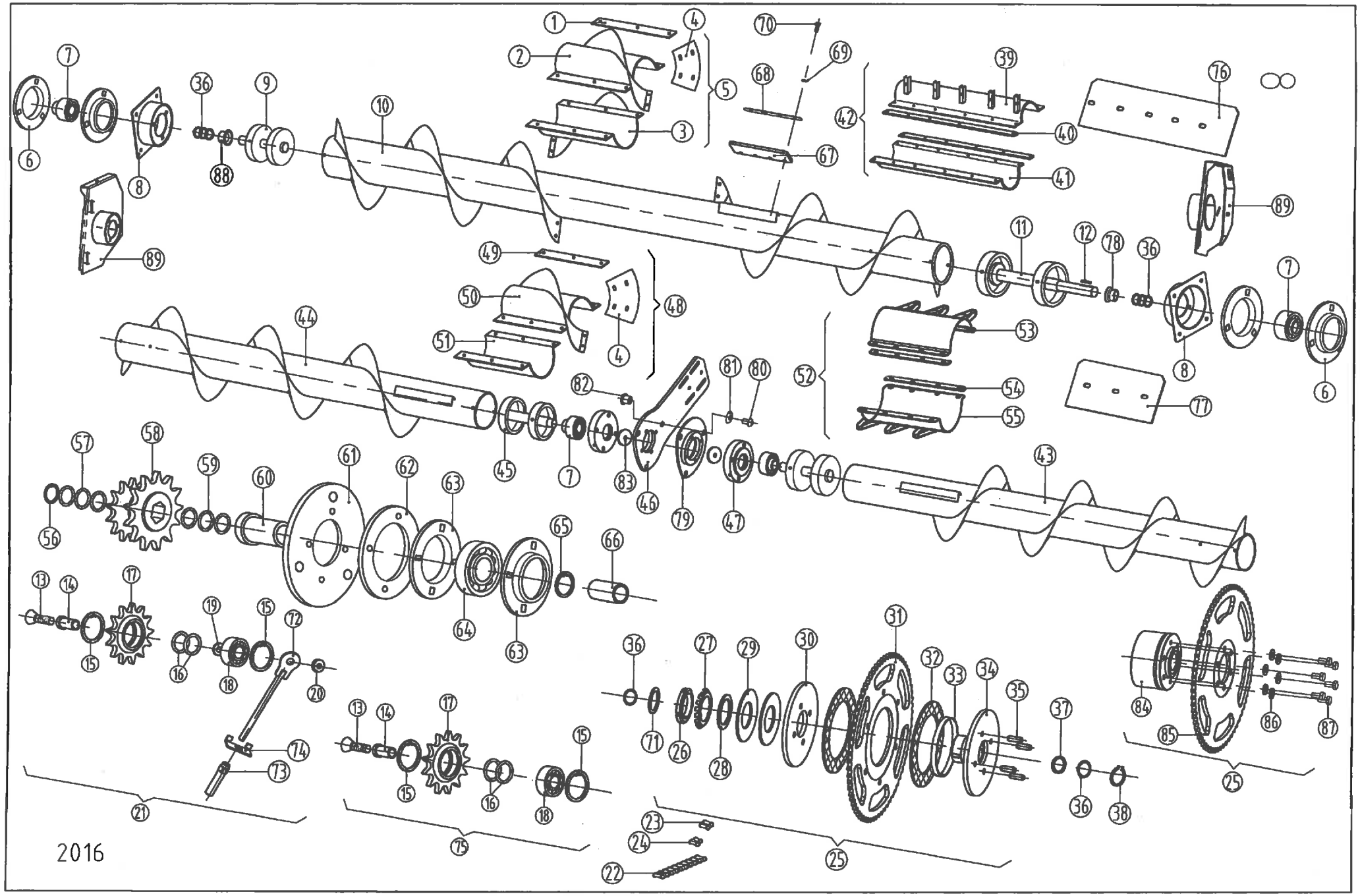
2016

AUGER ASSEMBLY - RIGID

Ref.	Part Number	Description		6 row 70cm	6 row 76.2cm	8 row 50cm	8 row 56cm	8 row 70cm	8 row 76.2cm	12 row 50cm	12 row 56cm	12 row 70cm	12 row 76.2cm	16 row 76.2cm
1.	1.315.408	Strap		2	2	2	2	2	2	2	-	-	-	-
2.	1.353.171	Auger flight extension-LH - 22" pitch	→2007	-	1	1	1	1	1	1	-	-	-	-
2.	1.355.448	Auger flight extension-LH - 22" pitch	2008→	1	1	1	1	1	1	1	-	-	-	-
3.	1.353.172	Auger flight extension-RH - 22" pitch	→2007	-	1	1	1	1	1	1	-	-	-	-
3.	1.355.449	Auger flight extension-RH - 22" pitch	2008→	1	1	1	1	1	1	1	-	-	-	-
4.	1.353.560	Plate	→2007	-	2	2	2	2	2	2	2	2	2	2
5.	1.353.218	Auger flight extension kit/1+2+3+4/-22"pitch	→2007	-	1	-	-	1	1	1	-	-	-	-
5.	1.355.452	Auger flight extension kit/1+2+3+4/-22"pitch	2008→	1	1	1	1	1	1	1	-	-	-	-
6.	616.068.0	Bearing housing		4	4	4	4	4	4	4	4	4	4	4
7.	87000003556	Y bearing /RAE35 NPPB/238.207		2	2	2	2	2	2	2	4	4	4	4
8.	1.375.203	Bracket **(2009→ see pg. 6 item 18)**	→2008	-	2	-	-	2	2	2	2	2	2	2
9.	1.318.122	Auger shaft assy		1	1	1	1	1	1	1	-	-	-	-
10.	1.376.214	Auger assy - 22" pitch		-	1	-	-	-	-	-	-	-	-	-
10.	1.376.215	Auger assy - 22" pitch		-	-	-	-	-	1	-	-	-	-	-
10.	1.373.121	Auger assy - 22" pitch	2015→	-	-	1	-	-	-	-	-	-	-	-
10.	1.373.088	Auger assy - 22" pitch	2015→	-	-	-	1	-	-	-	-	-	-	-
10.	1.376.229	Auger assy - 22" pitch		-	-	-	-	1	-	-	-	-	-	-
10.	1.376.228	Auger assy - 22" pitch		1	-	-	-	-	-	-	-	-	-	-
10.	1.379.674	Auger assy - 22" pitch	2014→	-	-	-	-	-	-	1	-	-	-	-
11.	1.351.349	Auger shaft assy		1	1	1	1	1	1	1	2	2	2	2
12.	84210084000	Key B10x8x40		1	1	1	1	1	1	1	2	2	2	2
13.	80401004063	Hex socket countersunk-head bolt M10x40 - DIN7991/10.9		2	2	2	2	2	2	2	4	4	4	4
14.	1.375.968	Shaft		2	2	2	2	2	2	2	4	4	4	4
15.	70100004701	Retaining ring - internal 47x1.75 - DIN472		4	4	4	4	4	4	4	8	8	8	8
16.	1.315.070	Shim	→2014	4	4	4	4	4	4	4	8	8	8	8
16.	1.373.045	Spacer	2015→	2	2	2	2	2	2	2	4	4	4	4
16.	1.373.046	Shim	2015→	2	2	2	2	2	2	2	4	4	4	4
17.	1.309.052	Idler sprocket 16T		2	2	2	2	2	2	2	4	4	4	4
18.	87001620414	Bearing 6204 - 2RS		2	2	2	2	2	2	2	4	4	4	4
19.	1.301.433	Washer		1	1	1	1	1	1	1	2	2	2	2
20.	1.375.969	Tapped insert		1	1	1	1	1	1	1	2	2	2	2
21.	1.376.233	Chain adjuster assy	→2010	1	1	1	1	1	1	1	2	2	2	2
21.	1.378.521	Chain adjuster assy	2011→	1	1	1	1	1	1	1	2	2	2	2
22.	1.376.238	Chain		1	1	1	1	1	1	1	2	2	2	2
22.	1.378.523	Chain	2011→	1	1	1	1	1	1	1	2	2	2	2
23.	1.320.493	Connector link		1	1	1	1	1	1	1	2	2	2	2
24.	1.320.492	Half link		1	1	1	1	1	1	1	2	2	2	2
24.	1.320.492	Half link	2011→	-	-	-	-	-	-	-	-	-	-	-
25.	1.376.232	Sprocket assy - 70T	→2014	1	1	1	1	1	1	1	2	2	2	2
25.	1.377.272	Sprocket assy - 70T	2015→	1	1	1	1	1	1	1	2	2	2	2
26.	86700001100	Bearing nut - KM11		1	1	1	1	1	1	1	2	2	2	2
27.	86801100000	Retainer ring - MB-11		1	1	1	1	1	1	1	2	2	2	2
28.	1.375.430	Washer		1	1	1	1	1	1	1	2	2	2	2
29.	96700000112	Disk spring B112 - DIN2093		2	2	2	2	2	2	2	4	4	4	4
30.	1.375.428	Plate		1	1	1	1	1	1	1	2	2	2	2
31.	1.375.431	Sprocket 70T (5/8)		1	1	1	1	1	1	1	2	2	2	2
32.	25553201007	Friction disk		2	2	2	2	2	2	2	4	4	4	4
33.	1.310.780	Ring		1	1	1	1	1	1	1	2	2	2	2
34.	1.375.429	Hub		1	1	1	1	1	1	1	2	2	2	2
35.	1.376.020	Pin		4	4	4	4	4	4	4	8	8	8	8
36.	1.309.011	Shim		16	16	16	16	16	16	16	20	20	20	20
37.	1.320.540	Shim	→2014	1	1	1	1	1	1	1	2	2	2	2
38.	70200003501	Retaining ring - external 35x1.5 - DIN471		1	1	1	1	1	1	1	2	2	2	2
39.	1.304.770	Auger finger		1	1	1	1	1	1	1	-	-	-	-
40.	1.304.876	Strap		2	2	2	2	2	2	2	-	-	-	-
41.	1.304.769	Auger finger		1	1	1	1	1	1	1	-	-	-	-
42.	1.304.935	Spike tooth kit		1	1	1	1	1	1	1	-	-	-	-
43.	1.376.216	Auger - LH wing		-	-	-	-	-	-	-	-	-	1	-
43.	1.376.230	Auger - LH wing		-	-	-	-	-	-	-	-	1	-	-
43.	1.379.636	Auger - LH wing	2014→	-	-	-	-	-	-	-	1	-	-	-
43.	1.379.084	Auger - LH wing	2013→	-	-	-	-	-	-	-	-	-	-	1
44.	1.376.217	Auger - RH wing		-	-	-	-	-	-	-	-	-	1	-
44.	1.376.231	Auger - RH wing		-	-	-	-	-	-	-	-	1	-	-
44.	1.379.637	Auger - RH wing	2014→	-	-	-	-	-	-	-	1	-	-	-
44.	1.379.087	Auger - RH wing	2013→	-	-	-	-	-	-	-	-	-	-	1
45.	1.304.893	Auger shaft assy		-	-	-	-	-	-	-	2	2	2	2
46.	1.376.241	Console	→2013	-	-	-	-	-	-	-	1	1	1	1
46.	1.379.543	Console	2014→	-	-	-	-	-	-	-	1	1	1	1
47.	676.304	Bearing housing		-	-	-	-	-	-	-	2	2	2	2
48.	1.353.572	Auger flight extension kit - pitch 22"	→2007	-	-	-	-	-	-	-	1	1	1	1
48.	1.355.468	Auger flight extension kit - pitch 22"	2008→	-	-	-	-	-	-	-	1	1	1	1
49.	1.353.573	Strap		-	-	-	-	-	-	-	4	4	4	4
50.	1.353.567	Auger flight extension-LH - pitch 22"	→2007	-	-	-	-	-	-	-	1	1	1	1
50.	1.355.464	Auger flight extension-LH - pitch 22"	2008→	-	-	-	-	-	-	-	1	1	1	1
50.	1.353.568	Auger flight extension-RH - pitch 22"	→2007	-	-	-	-	-	-	-	1	1	1	1
50.	1.355.465	Auger flight extension-RH - pitch 22"	2008→	-	-	-	-	-	-	-	1	1	1	1
51.	1.353.571	Support plate		-	-	-	-	-	-	-	2	2	2	2
52.	1.353.578	Spike tooth kit	→2013	-	-	-	-	-	-	-	1	1	1	1

Note: Application of shims if necessary.
Application of items 67-70 depends on the combine open.
Parts marked with * are optional.

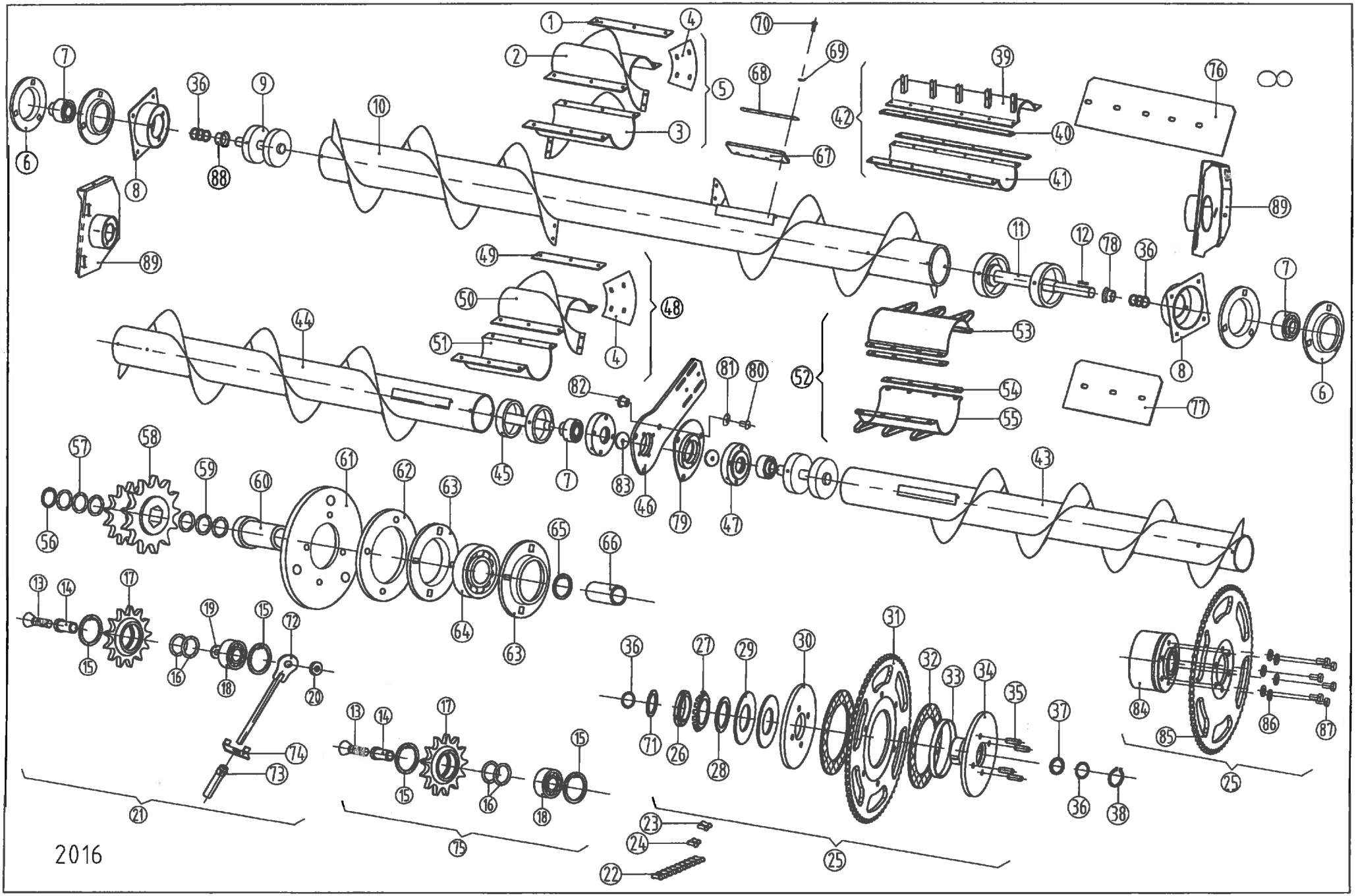
2016

AUGER ASSEMBLY - RIGID

Ref.	Part Number	Description		6 row 70cm	6 row 76.2cm	8 row 50cm	8 row 56cm	8 row 70cm	8 row 76.2cm	12 row 50cm	12 row 56cm	12 row 70cm	12 row 76.2cm	16 row 76.2cm
52.	1.379.629	Spike tooth kit	2014→	-	-	-	-	-	-	-	1	1	1	1
53.	1.353.576	Auger finger	→2013	-	-	-	-	-	-	-	2	2	2	2
53.	1.379.550	Auger finger	2014→	-	-	-	-	-	-	-	2	2	2	2
54.	1.353.577	Strap	→2013	-	-	-	-	-	-	-	4	4	4	4
54.	1.379.560	Strap	2014→	-	-	-	-	-	-	-	4	4	4	4
55.	1.353.575	Auger finger	→2013	-	-	-	-	-	-	-	2	2	2	2
55.	1.379.550	Auger finger	2014→	-	-	-	-	-	-	-	2	2	2	2
56.	70200003201	Retaining ring - external 32x1.5 - DIN471		1	1	1	1	1	1	1	2	2	2	2
57.	71632045100	Shim 32x45x1 - DIN988		3	3	3	3	3	3	3	6	6	6	6
58.*	1.351.355	Sprocket 16T	→2009	1	1	1	1	1	1	1	2	2	2	2
58.	1.351.178	Sprocket 18T	→2009	1	1	1	1	1	1	1	2	2	2	2
58.*	1.353.616	Sprocket 20T	→2009	1	1	1	1	1	1	1	2	2	2	2
58.	1.377.687	Sprocket 16T / 14T	2010→	1	1	1	1	1	1	1	2	2	2	2
58.*	1.377.583	Sprocket 18T / 16T	2010→	1	1	1	1	1	1	1	2	2	2	2
58.*	1.379.642	Sprocket 20T / 18T	2010→	1	1	1	1	1	1	1	2	2	2	2
59.	71637047100	Shim 37x47x1 - DIN988		3	3	3	3	3	3	3	6	6	6	6
60.	1.375.967	Shaft		-	-	-	-	-	-	-	2	2	2	2
61.	1.375.966	Disk plate		-	-	-	-	-	-	-	2	2	2	2
62.	1.375.965	Washer		-	-	-	-	-	-	-	2	2	2	2
63.	87300008516	Bearing housing - PF85		-	-	-	-	-	-	-	2	2	2	2
64.	87030620914	Y bearing 1726209-2RS1 SKF		-	-	-	-	-	-	-	2	2	2	2
65.	70200004501	Retaining ring - external 45x1.75 - DIN471		-	-	-	-	-	-	-	2	2	2	2
66.	1.354.565	Spacer (l=78)		1	1	1	1	1	1	1	-	-	-	-
67.	1.377.725	Rubber plate	2010→	2	2	2	2	2	2	2	2	2	2	2
68.	1.377.726	Strap	2010→	2	2	2	2	2	2	2	2	2	2	2
69.	91623938961	Spring washer	2010→	8	8	8	8	8	8	8	8	8	8	8
70.	79410003066	Hex bolt M10x30 - DIN933/8.8	2010→	8	8	8	8	8	8	8	8	8	8	8
71.	1.308.407	Spacer (l=12.5)	2010-2014	1	1	1	1	1	1	1	2	2	2	2
72.	1.378.449	Adjuster arm	2011→	1	1	1	1	1	1	1	2	2	2	2
73.	1.378.448	Adjuster nut	2011→	1	1	1	1	1	1	1	2	2	2	2
74.	1.378.453	Returner	2011→	1	1	1	1	1	1	1	2	2	2	2
75.	1.378.524	Idler sprocket assy	2011→	1	1	1	1	1	1	1	2	2	2	2
76.	1.308.132	Cover plate	2011→	2	2	2	2	2	2	2	-	-	-	-
77.	1.356.455	Cover plate	→2013	-	-	-	-	-	-	-	4	4	4	4
77.	1.379.561	Cover plate	2014→	-	-	-	-	-	-	-	4	4	4	4
78.	1.379.476	Thrust sleeve	2014→	1	1	1	1	1	1	1	1	1	1	1
79.	1.379.485	Disc weld	2014→	-	-	-	-	-	-	-	1	1	1	1
80.	81110001668	Hex socket button-head bolt M10x16	2014→	-	-	-	-	-	-	-	3	3	3	3
81.	1.379.488	Washer	2014→	-	-	-	-	-	-	-	3	3	3	3
82.	1.379.487	Nut	2014→	-	-	-	-	-	-	-	3	3	3	3
83.	665.840.0	Washer	2014→	-	-	-	-	-	-	-	2	2	2	2
84.	1.377.164	Safety clutch (Walterscheid)		1	1	1	1	1	1	1	1	1	1	1
85.	1.377.271	Sprocket		1	1	1	1	1	1	1	1	1	1	1
86.	91623938861	Spring washer A10		6	6	6	6	6	6	6	6	6	6	6
87.	79410002066	Hex bolt M10x20 - DIN933/8.8		6	6	6	6	6	6	6	6	6	6	6
88.	1.379.476	Thrust sleeve	2015→	-	-	-	-	-	-	-	1	1	1	1
88.	96701320540	Spacer	2015→	1	1	1	1	1	1	1	-	-	-	-
89.	1.377.453	Bracket welded - LH		1	1	1	1	1	1	1	1	1	1	1
89.	1.377.454	Bracket welded - RH		1	1	1	1	1	1	1	1	1	1	1

Note: Application of shims if necessary.
Application of items 67-70 depends on the combine open.
Parts marked with * are optional.

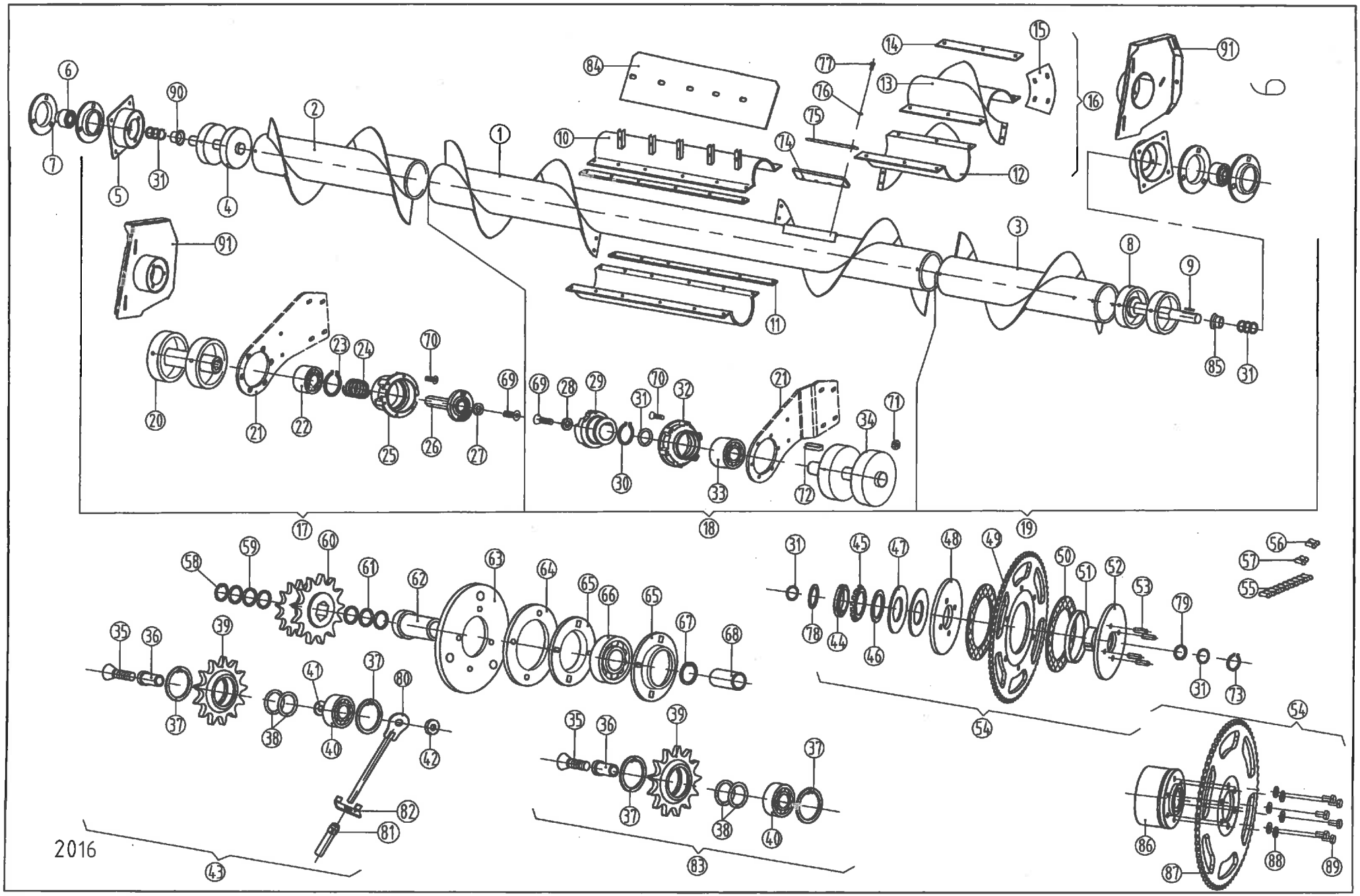
2016

AUGER ASSEMBLY - 6306F70,6306F,6308F,6309F

Ref.	Part Number	Description		6306F 70	6306F	6308F	6309F
1.	1.375.913	Auger - central -22" pitch		-	1	1	-
1.	1.377.119	Auger - central -22" pitch		1	-	-	-
1.	1.377.504	Auger - central -22" pitch		-	-	-	1
2.	1.376.321	Auger - RH wing - 22" pitch		1	1	-	-
2.	1.376.323	Auger - RH wing - 22" pitch		-	-	1	1
3.	1.376.320	Auger - LH wing - 22 "pitch		1	1	-	-
3.	1.376.322	Auger - LH wing - 22 "pitch		-	-	1	1
4.	1.318.122	Auger shaft assy		1	1	1	1
5.	1.375.203	Bracket (see pg. 6 item 18)		-	-	-	-
6.	87000003556	Y-bearing /RAE35 NPPB/ 238.207		2	2	2	2
7.	616.068.0	Bearing housing		4	4	4	4
8.	1.351.349	Auger shaft assy		1	1	1	1
9.	84210084000	Key B10x8x40		1	1	1	1
10.	1.304.769	Auger finger - LH		1	1	1	1
10.	1.304.770	Auger finger - RH		1	1	1	1
11.	1.304.876	Strap		4	4	4	4
12.	1.355.449	Support plate - RH		1	1	1	1
13.	1.355.448	Support plate - LH		1	1	1	1
14.	1.315.408	Strap		4	4	4	4
15.	1.353.560	Plate		2	2	2	2
16.	1.355.452	Auger flight extension kit - 22"pitch		1	1	1	1
17.	1.376.363	Auger assy - RH wing - 22"pitch		1	1	-	-
17.	1.376.369	Auger assy - RH wing - 22"pitch		-	-	1	1
18.	1.377.183	Auger assy - central - 22"pitch		1	-	-	-
18.	1.376.365	Auger assy - central - 22"pitch		-	1	1	-
18.	1.377.503	Auger assy - central - 22"pitch		-	-	-	1
19.	1.376.364	Auger assy - LH wing - 22"pitch		1	1	-	-
19.	1.376.370	Auger assy - LH wing - 22"pitch		-	-	1	1
20.	1.328.479	Auger shaft assy		2	2	2	2
21.	1.376.371	Console - central frame - LH		1	1	1	1
21.	1.376.372	Console - central frame - RH		1	1	1	1
21.	1.376.373	Console - wing LH		1	1	1	1
21.	1.376.374	Console - wing RH		1	1	1	1
22.	1.309.259	Bearing - 172 6211-2RS		2	2	2	2
23.	70200005501	Retaining ring -for shaft 55x2 - DIN471		2	2	2	2
24.	1.308.932	Spring		2	2	2	2
25.	1.353.179	Bearing housing		2	2	2	2
26.	1.328.472	Jaw clutch - outer		2	2	2	2
27.	1.328.492	Washer		2	2	2	2
28.	1.308.948	Washer		2	2	2	2
29.	1.328.473	Jaw cluch - inner		2	2	2	2
30.	70200004001	Retaining ring -for shaft 40x1.75 - DIN471		2	2	2	2
31.	1.309.011	Shim		8	8	8	8
32.	1.353.178	Bearing housing		2	2	2	2
33.	1.327.635	Y-bearing /RAE40 NPPB/		2	2	2	2
34.	1.308.414	Auger shaft assy		2	2	2	2
35.	80401004063	Hex socket countersunk-head bolt M10x40 - DIN7991/10.9		1	1	1	1
36.	1.375.968	Shaft		1	1	1	1
37.	70100004701	Retaining ring - internal 47x1.75 - DIN472		3	3	3	3
38.	1.315.070	Shim	→2014	4	4	4	4
38.	1.373.045	Spacer	2015→	4	4	4	4
38.	1.373.046	Shim	2015→	4	4	4	4
39.	1.309.052	Idler sprocket 16T		1	1	1	1
40.	87001620414	Bearing 6204-2RS		1	1	1	1
41.	1.301.433	Washer		2	2	2	2
42.	1.375.969	Tapped insert		1	1	1	1
43.	1.378.521	Chain adjuster assy		1	1	1	1
44.	86700001100	Bearing nut - KM11		1	1	1	1
45.	86801100000	Retainer ring - MB-11		1	1	1	1
46.	1.375.430	Washer		1	1	1	1

Note: items 62-67 are only for interior drive, item 68 is only for exterior drive.
Application of shims as necessary.
Application of items 74-77 depends on the combine open.
Parts marked with * are optional.

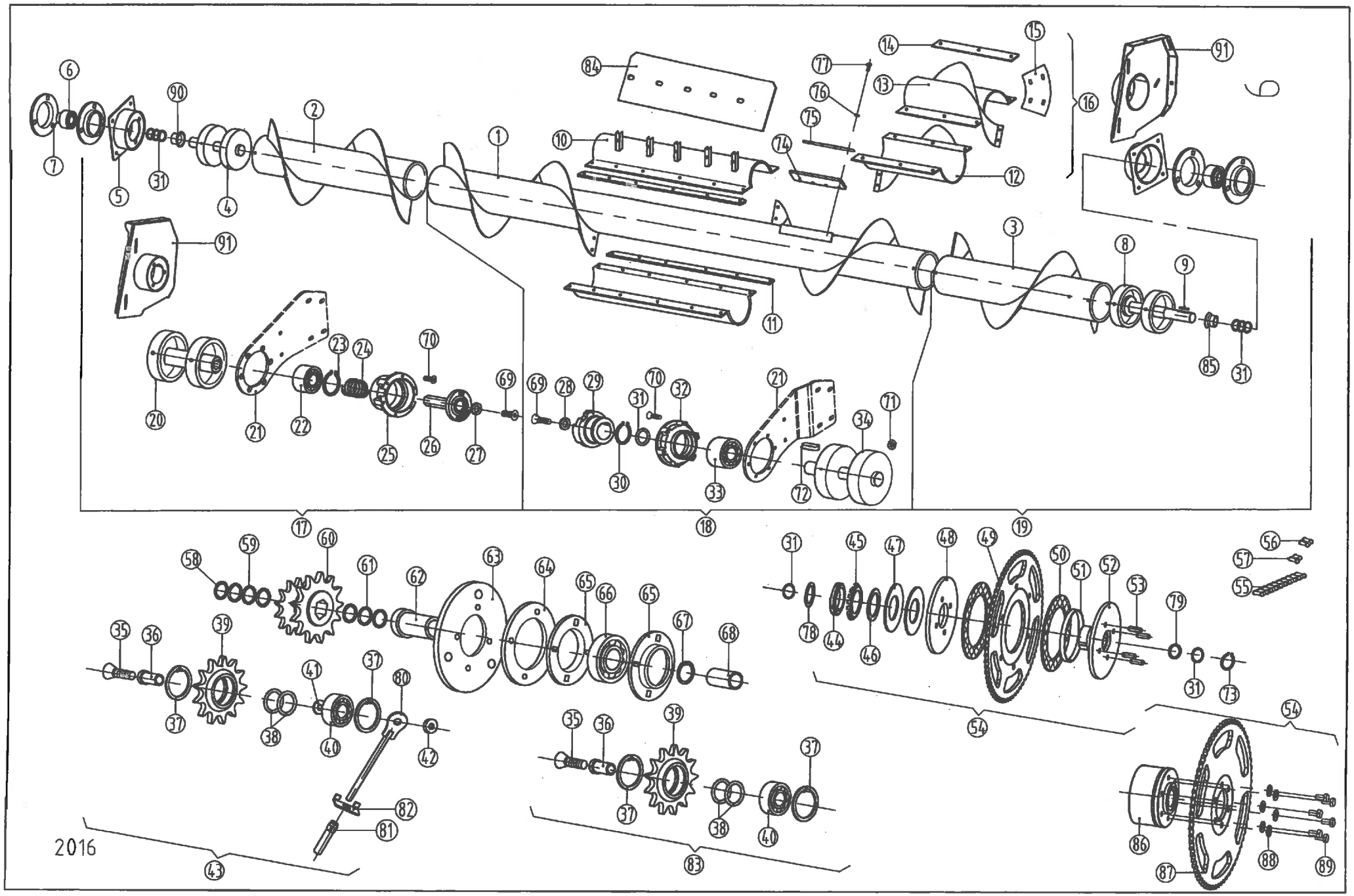
2016

AUGER ASSEMBLY - 6306F70,6306F,6308F,6309F

Ref.	Part Number	Description		6306F 70	6306F	6308F	6309F
47.	96700000112	Disk spring B112 - DIN2093		2	2	2	2
48.	1.375.428	Plate		1	1	1	1
49.	1.375.431	Sprocket 70T (5/8)		1	1	1	1
50.	25553201007	Friction disk		2	2	2	2
51.	1.310.780	Ring		1	1	1	1
52.	1.375.429	Hub		1	1	1	1
53.	1.376.020	Pin		4	4	4	4
54.	1.376.232	Sprocket assy - 70T	→2014	1	1	1	1
54.	1.377.272	Sprocket assy - 70T	2015→	1	1	1	1
55.	1.378.523	Chain		1	1	1	1
56.	1.320.493	Connector link		1	1	1	1
57.	1.320.492	Half link		-	-	-	-
58.	70200003201	Retaining ring - internal 32x1.5 - DIN471		1	1	1	1
59.	71632045100	Shim 32x45x1 - DIN988		3	3	3	3
60.	1.377.687	Sprocket 16T / 14T		1	1	1	1
60.*	1.377.583	Sprocket 18T / 16T		1	1	1	1
60.*	1.379.642	Sprocket 20T / 18T		1	1	1	1
61.	71637047100	Shim 37x47x1 - DIN988		3	3	3	3
62.	1.375.967	Shaft (see note below)		2	2	1	1
63.	1.375.966	Plate (see note below)		2	2	1	1
64.	1.375.965	Washer (see note below)		2	2	1	1
65.	87300008516	Bearing housing (see note below)- PF85		4	4	2	2
66.	87030620914	Y-bearing 1726209-2RS1 SKF (see note below)		2	2	1	1
67.	70200004501	Retaining ring - internal (see note below) 45x1.75 - DIN471		2	2	1	1
68.	1.354.565	Spacer (l=76) (see note below)		1	1	1	1
69.	80400803563	Hex socket countersunk-head bolt M8x35 - DIN7991 T50 10.9		4	4	4	4
70.	80400804063	Hex socket countersunk-head bolt M8x40 - DIN7991 IP 8.8		24	24	24	24
71.	73508000066	Hex nut M8 - DIN934		24	24	24	24
72.	84208074000	Key 8x7x40		2	2	2	2
73.	70200003501	Retaining ring - external 35x1.5 - DIN471		1	1	1	1
74.	1.377.725	Rubber plate		2	2	2	2
75.	1.377.726	Strap		2	2	2	2
76.	91623938961	Spring washer		8	8	8	8
77.	79410003066	Hex bolt M10x30 - DIN933/8.8		8	8	8	8
78.	1.308.407	Spacer (l=12.5)	2010-2014.	1	1	1	1
79.	1.320.540	Shim (l=5)	→2014	1	1	1	1
80.	1.378.449	Adjuster arm		1	1	1	1
81.	1.378.448	Adjuster nut		1	1	1	1
82.	1.378.453	Returner		1	1	1	1
83.	1.378.524	Goiding assy		1	1	1	1
84.	1.308.132	Cover plate		2	2	2	2
85.	1.379.476	Thrust sleeve	2014→	1	1	1	1
86.	1.377.164	Safety clutch (Walterscheid)		1	1	1	1
87.	1.377.271	Sprocket		1	1	1	1
88.	91623938861	Spring washer A10		6	6	6	6
89.	79410002066	Hex bolt M10x20 - DIN933/8.8		6	6	6	6
90.	96701320540	Spacer	2015→	1	1	1	1
91.	1.377.453	Bracket welded - LH		1	1	1	1
91.	1.377.454	Bracket welded - RH		1	1	1	1

Note: items 62-67 are only for interior drive, item 68 is only for exterior drive.
Application of shims as necessary.
Application of items 74-77 depends on the combine open.
Parts marked with * are optional.

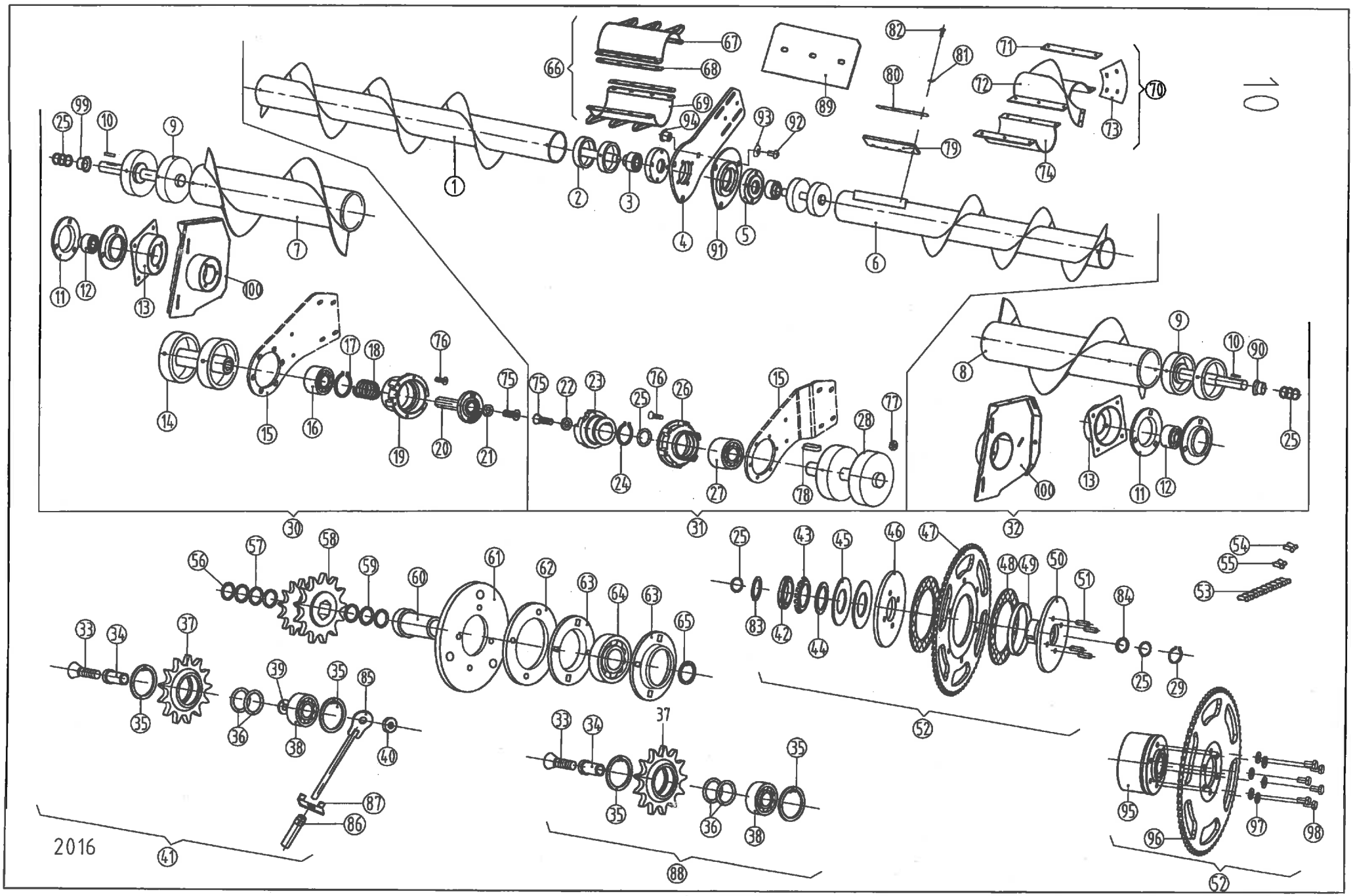
2016

AUGER ASSEMBLY -6312F

Ref.	Part Number	Description		6312-70F	6312F
1.	1.376.379	Auger - central RH -22"pitch		-	1
1.	1.373.878	Auger - central RH -22"pitch		1	-
2.	1.304.893	Auger shaft assy		2	2
3.	87000003556	Y-Bearing /RAE35 NPPB/		2	2
4.	1.376.241	Console	→2013	1	1
4.	1.379.543	Console	2014→	1	1
5.	676.304	Bearing housing		2	2
6.	1.376.380	Auger central LH - 22"pitch		-	1
6.	1.373.877	Auger central LH - 22"pitch		1	-
7.	1.376.326	Auger - RH wing - 22"pitch		-	1
7.	1.373.885	Auger - RH wing - 22"pitch		1	-
8.	1.376.325	Auger - LH wing - 22"pitch		-	1
8.	1.373.884	Auger - LH wing - 22"pitch		1	1
9.	1.351.349	Auger shaft assy		2	2
10.	84210084000	Key B10x8x40		2	2
11.	616.068.0	Bearing housing		4	4
12.	87000003556	Y-bearing /RAE35 NPPB/		2	2
13.	1.375.203	Bracket **(see pg. 6 item 18)**		2	-
14.	1.328.479	Auger shaft assy		2	2
15.	1.376.371	Console - central frame LH		1	1
15.	1.376.372	Console - central frame RH		1	1
15.	1.376.373	Console - wing LH		1	1
15.	1.376.374	Console - wing RH		1	1
16.	1.309.259	Bearing - 172 6211-2RS		2	2
17.	70200005501	Retaining ring -for shaft 55x2 - DIN471		2	2
18.	1.308.932	Spring		2	2
19.	1.353.179	Bearing housing		2	2
20.	1.328.472	Jaw clutch - outer		2	2
21.	1.328.492	Washer		2	2
22.	1.308.948	Washer		2	2
23.	1.328.473	Jaw cluch - inner		2	2
24.	70200004001	Retaining ring -for shaft 40x1.75 - DIN471		2	2
25.	1.309.011	Shim		16	16
26.	1.353.178	Bearing housing		2	2
27.	1.327.635	Y-bearing RAE40 NPPB		2	2
28.	1.308.414	Auger shaft assy		2	2
29.	70200003501	Retaining ring - for shaft 35x1.5 - DIN471		2	2
30.	1.376.377	Auger assy - RH wing - 22"pitch		-	1
30.	1.373.883	Auger assy - RH wing - 22"pitch		1	-
31.	1.376.324	Auger assy - central pair - 22"pitch		-	1
31.	1.373.876	Auger assy - central pair - 22"pitch		1	-
32.	1.376.378	Auger assy - LH wing - 22"pitch		-	1
32.	1.373.882	Auger assy - LH wing - 22"pitch		1	-
33.	80401004063	Hex socket countersunk-head bolt M10x40 - DIN7991/10.9		2	2
34.	1.375.968	Shaft		2	2
35.	70100004701	Retaining ring - internal 47x1.75 - DIN472		4	4
36.	1.315.070	Shim	→2014	6	6
36.	1.373.045	Spacer	2015→	4	4
36.	1.373.046	Shim	2015→	4	4
37.	1.309.052	Idler sprocket 16T		2	2
38.	87001620414	Bearing 6204-2RS		2	2
39.	1.301.433	Washer		2	2
40.	1.375.969	Tapped insert		2	2

Note: Application of shims if necessary.
Application of items 79-82 depends on the combine open.
Parts marked with * are optional.

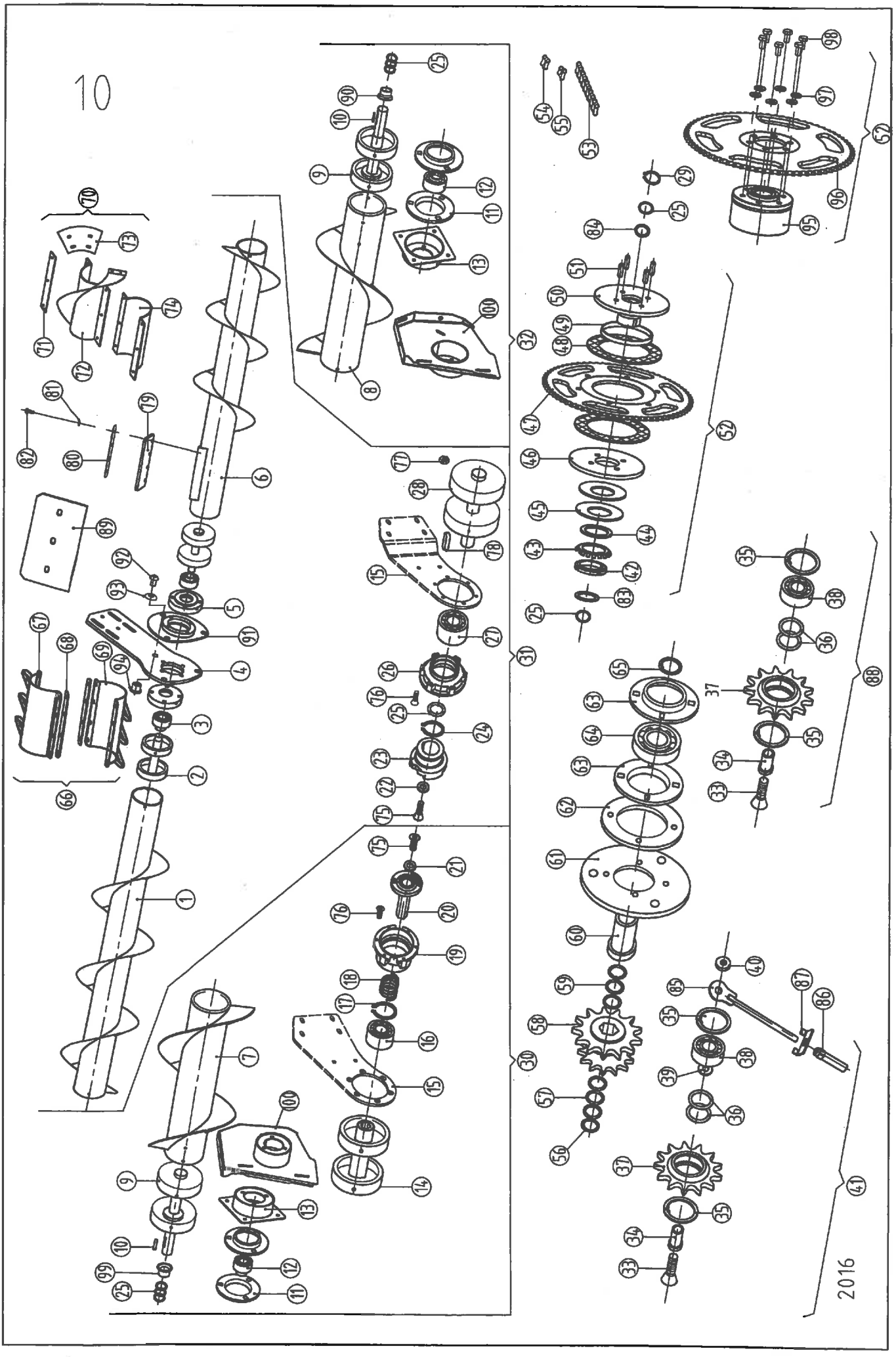
10
2016

AUGER ASSEMBLY -6312F

Ref.	Part Number	Description		6312-70F	6312F
41.	1.378.521	Chain adjuster assy		2	2
42.	86700001100	Bearing nut - KM11		2	2
43.	86801100000	Retainer ring - MB-11		2	2
44.	1.375.430	Washer		2	2
45.	96700000112	Disk spring B112 - DIN2093		4	4
46.	1.375.428	Plate		2	2
47.	1.375.431	Sprocket 70T (5/8)		2	2
48.	25553201007	Friction disk		4	4
49.	1.310.780	Ring		2	2
50.	1.375.429	Hub		2	2
51.	1.376.020	Pin		8	8
52.	1.376.232	Sprocket assy - 70T	→2014	2	2
52.	1.377.272	Sprocket assy - 70T	2015→	2	2
53.	1.378.523	Chain		2	2
54.	1.320.493	Connector link		2	2
55.	1.320.492	Half link		-	-
56.	70200003201	Retaining ring - external 32x1.5 - DIN471		2	2
57.	71632045100	Shim 32x45x1 - DIN988		6	6
58.	1.377.687	Sprocket 16T / 14T		2	2
58.*	1.377.583	Sprocket 18T / 16T		2	2
58.*	1.379.642	Sprocket 20T / 18T		2	2
59.	71637047100	Shim 37x47x1 - DIN988		6	6
60.	1.375.967	Shaft		2	2
61.	1.375.966	Plate		2	2
62.	1.375.965	Washer		2	2
63.	87300008516	Bearing housing - PF85		2	2
64.	87030620914	Y bearing 1726209-2RS1 SKF		2	2
65.	70200004501	Retaining ring - for shaft 45x1.75 - DIN471		2	2
66.	1.353.578	Spike tooth kit	→2013	1	1
66.	1.379.629	Spike tooth kit	2014→	1	1
67.	1.353.576	Auger finger	→2013	2	2
67.	1.379.550	Auger finger	2014→	2	2
68.	1.353.577	Strap	→2013	4	4
68.	1.379.560	Strap	2014→	4	4
69.	1.353.575	Auger finger	→2013	2	2
69.	1.379.550	Auger finger	2014→	2	2
70.	1.355.468	Auger flight extension kit - pitch 22"		1	1
71.	1.353.573	Strap		4	4
72.	1.355.464	Auger flight extension-LH - pitch 22"		2	2
72.	1.355.465	Auger flight extension-RH - pitch 22"		2	2
73.	1.353.560	Plate		2	2
74.	1.353.571	Support plate		2	2
75.	80400803563	Hex socket countersunk-head bolt M8x35 - DIN7991 T50 10.9		4	4
76.	80400804063	Hex socket countersunk-head bolt M8x40 - DIN7991 IP 8.8		24	24

Note: Application of shims if necessary.
Application of items 79-82 depends on the combine open.
Parts marked with * are optional.

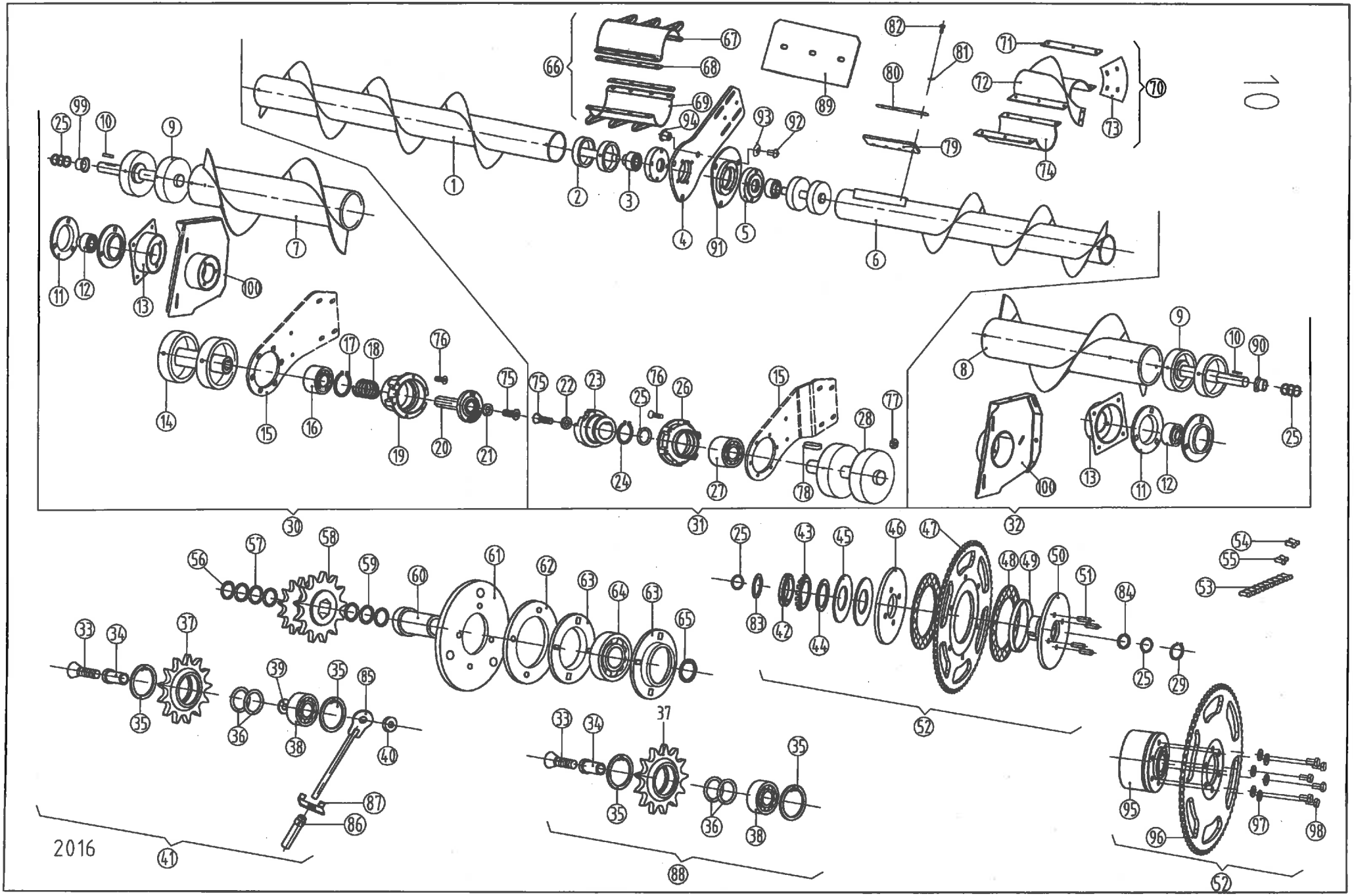
10
2016

AUGER ASSEMBLY -6312F

Ref.	Part Number	Description		6312-70F	6312F
77.	73508000066	Hex nut M8 - DIN934		12	12
78.	84208074000	Key 8x7x40		2	2
79.	1.377.725	Rubber plate		2	2
80.	1.377.726	Strap		2	2
81.	91623938961	Spring washer		8	8
82.	79410003066	Hex bolt M10x30 - DIN933/8.8		8	8
83.	1.308.407	Spacer (l=12.5)		2	2
84.	1.320.540	Shim (l=5)		2	2
85.	1.378.449	Adjuster arm		2	2
86.	1.378.448	Adjuster nut		2	2
87.	1.378.453	Returner		2	2
88.	1.378.524	Goiding assy		2	2
89.	1.356.455	Cover plate	→2013	2	2
89.	1.379.561	Cover plate	2014→	4	4
90.	1.379.476	Thrust sleeve		1	1
91.	1.379.485	Disc weld	2014→	1	1
92.	81110001668	Hex socket button-head bolt M10x16	2014→	3	3
93.	1.379.488	Washer	2014→	3	3
94.	1.379.487	Nut	2014→	3	3
95.	1.377.164	Safety clutch (Walterscheid)		1	1
96.	1.377.271	Sprocket		1	1
97.	91623938861	Spring washer A10		6	6
98.	79410002066	Hex bolt M10x20 - DIN933/8.8		6	6
99.	96701320540	Spacer	2015→	1	1
100.	1.377.453	Bracket welded - LH		1	1
100.	1.377.454	Bracket welded - RH		1	1

Note: Application of shims if necessary.
Application of items 79-82 depends on the combine open.
Parts marked with * are optional.

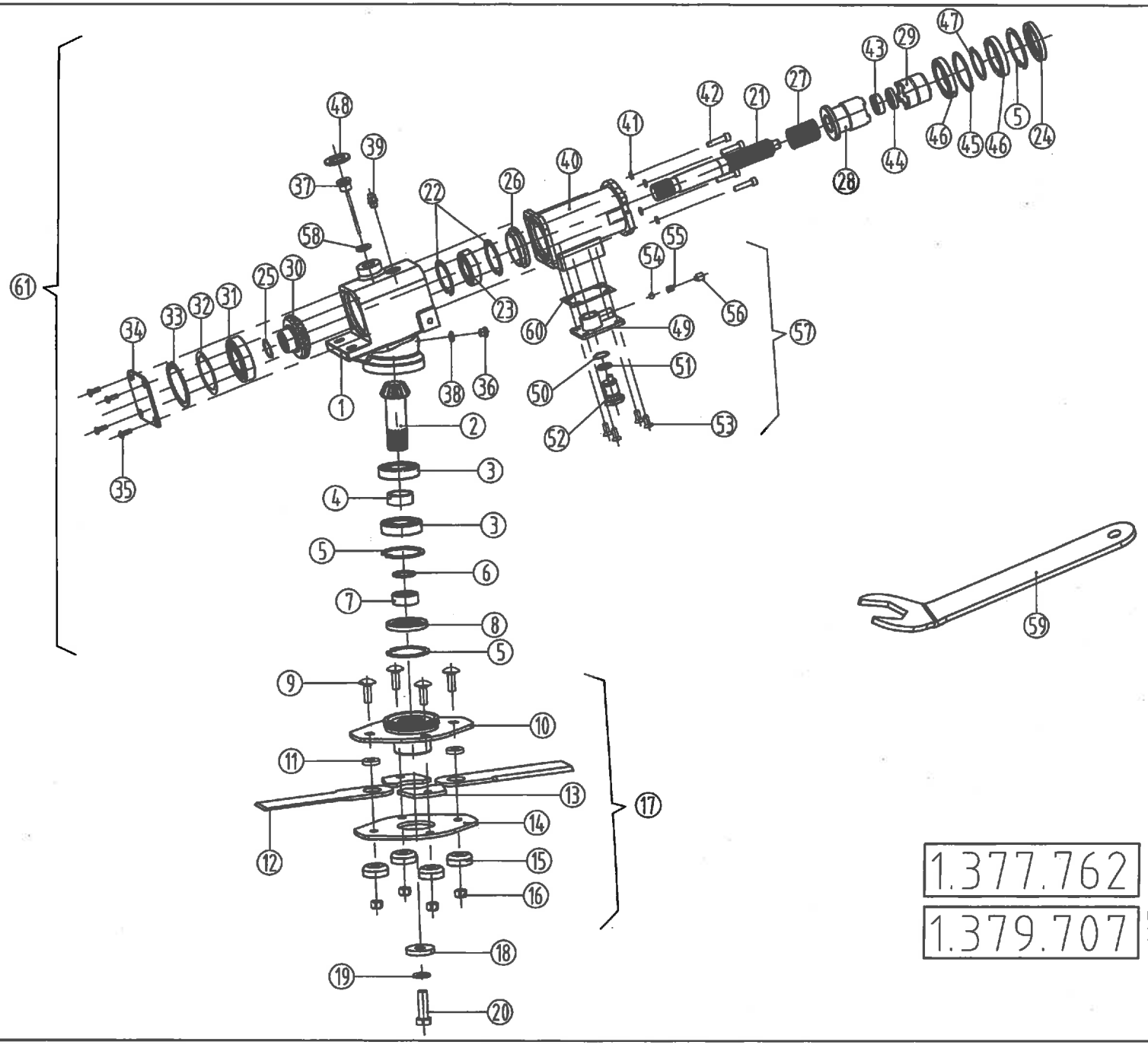

1.377.762	70cm,76,2cm 28";30"
1.379.707	50cm,56cm 20";22"

2014

STALK CHOPPER

Ref.	Part Number	Description		6306	6108 6208	6308	6309	6112 6212	6312	6316
1.	1.377.763	Gearbox housing		6	8	8	9	12	12	16
2.	1.375.702	Bevel gear 13T		6	8	8	9	12	12	16
3.	87001620710	Bearing 6207 - DIN625		12	16	16	18	24	24	32
4.	1.377.769	Spacer		6	8	8	9	12	12	16
5.	70100007201	Retaining ring - internal 72x2.5 - DIN472		18	24	24	27	36	36	48
6.	63003503500	O-ring 35X3.5 - DIN3771		6	8	8	9	12	12	16
7.	1.375.744	Spacer		6	8	8	9	12	12	16
8.	85804572081	Seal 45x72x8 - DIN3760-AS		6	8	8	9	12	12	16
9.	1.377.799	Carriage bolt		24	32	32	36	48	48	64
-	Loctite 243	Threadlocking agent								
10.	1.377.767	Knife support		6	-	8	9	-	12	16
10.	1.377.767	Knife support	2014→	-	4	-	-	6	-	-
10.	1.379.687	Knife support	2014→	-	4	-	-	6	-	-
11.	1.355.038	Bushing		12	16	16	18	24	24	32
12.	1.353.038	Knife		12	16	16	18	24	24	32
13.	1.378.347	Spacer		12	16	16	18	24	24	32
14.	1.378.344	Knife support plate - bottom		6	8	8	9	12	12	16
15.	1.355.039	Cap		24	32	32	36	48	48	64
16.	70712012563	Nut hex M12x1.25 - DIN980		24	32	32	36	48	48	64
17.	1.377.766	Knife assy		6	-	8	9	-	12	16
17.	1.377.766	Knife assy	2014→	-	4	-	-	6	-	-
17.	1.379.686	Knife assy	2014→	-	4	-	-	6	-	-
18.	1.375.752	Washer		6	8	8	9	12	12	16
19.	91623939161	Spring washer		6	8	8	9	12	12	16
20.	79316155066	Hex bolt M16x1.5x50 - DIN960/8.8		6	8	8	9	12	12	16
-	Loctite 243	Threadlocking agent								
21.	1.377.777	Shaft		6	8	8	9	12	12	16
22.	70100006201	Retaining ring - internal 62x2 - DIN472		12	16	16	18	24	24	32
23.	87000620611	Bearing 6206 - DIN625		6	8	8	9	12	12	16
24.	85805007208	Seal 50x72x8 - DIN3760-AS		6	8	8	9	12	12	16
25.	70200003001	Retaining ring - external 30x1.5 - DIN471		12	16	16	18	24	24	32
26.	1.377.776	Disk		6	8	8	9	12	12	16
27.	1.377.781	Spring		6	8	8	9	12	12	16
28.	1.377.778	Clutch half - I		6	8	8	9	12	12	16
29.	1.377.779	Clutch half - II		6	8	8	9	12	12	16
30.	1.375.701	Bevel gear 24T		6	8	8	9	12	12	16
31.	87001620810	Bearing 6208 - DIN625		6	8	8	9	12	12	16
32.	71663080050	Shim 63x80x0.5		12	16	16	18	24	24	32
32.	71663080020	Shim 63x80x0.2		12	16	16	18	24	24	32
32.	71663080010	Shim 63x80x0.1		6	8	8	9	12	12	16
33.	70100008001	Retaining ring - internal 80x2.5 - DIN472		6	8	8	9	12	12	16
34.	1.375.743	Cover plate		6	8	8	9	12	12	16
-	Loctite 5910	RTV silicone								
35.	80400602063	TORX socket countersunk-head bolt M6x20 - DIN7991/10.9		24	32	32	36	48	48	64
-	Loctite 243	Threadlocking agent								
36.	1.376.783	Closing screw		6	8	8	9	12	12	16
37.	1.377.095	Dipstick		6	8	8	9	12	12	16
38.	05200001200	Copper washer 12x16 - DIN7603		6	8	8	9	12	12	16
39.	1.309.247	Breather		6	8	8	9	12	12	16
40.	1.377.770	Housing		6	8	8	9	12	12	16
-	Loctite 5910	RTV silicone								
41.	71808000060	Spring washer M8 - DIN7980		24	32	32	36	48	48	64
42	80208003566	Hex socket head cap bolt M8x35 - DIN912		24	32	32	36	48	48	64
43.	87010620214	Bearing 6202 - DIN625		6	8	8	9	12	12	16
-	Loctite 603	Retaining compound								
44.	85803500700	Cup 35x7		6	8	8	9	12	12	16
45.	1.377.780	Spacer		6	8	8	9	12	12	16
46.	87006191014	Bearing 61910 - DIN625		12	16	16	18	24	24	32
47.	70200005001	Retaining ring - external 50x2 - DIN471		6	8	8	9	12	12	16
48.	1.377.986	Seal		6	8	8	9	12	12	16
49.	1.377.783	Switch housing		6	8	8	9	12	12	16
50.	70200002501	Retaining ring - external 25x1.2 - DIN471		6	8	8	9	12	12	16
51.	63002003009	O-ring 20x3		6	8	8	9	12	12	16
52.	1.377.787	Disengaging pin		6	8	8	9	12	12	16
53.	80400802063	Hex socket countersunk-head bolt M8x20 - DIN7991/8.8		24	32	32	36	48	48	64

Note: application of shims depends on the backlash of the gears.

13/A

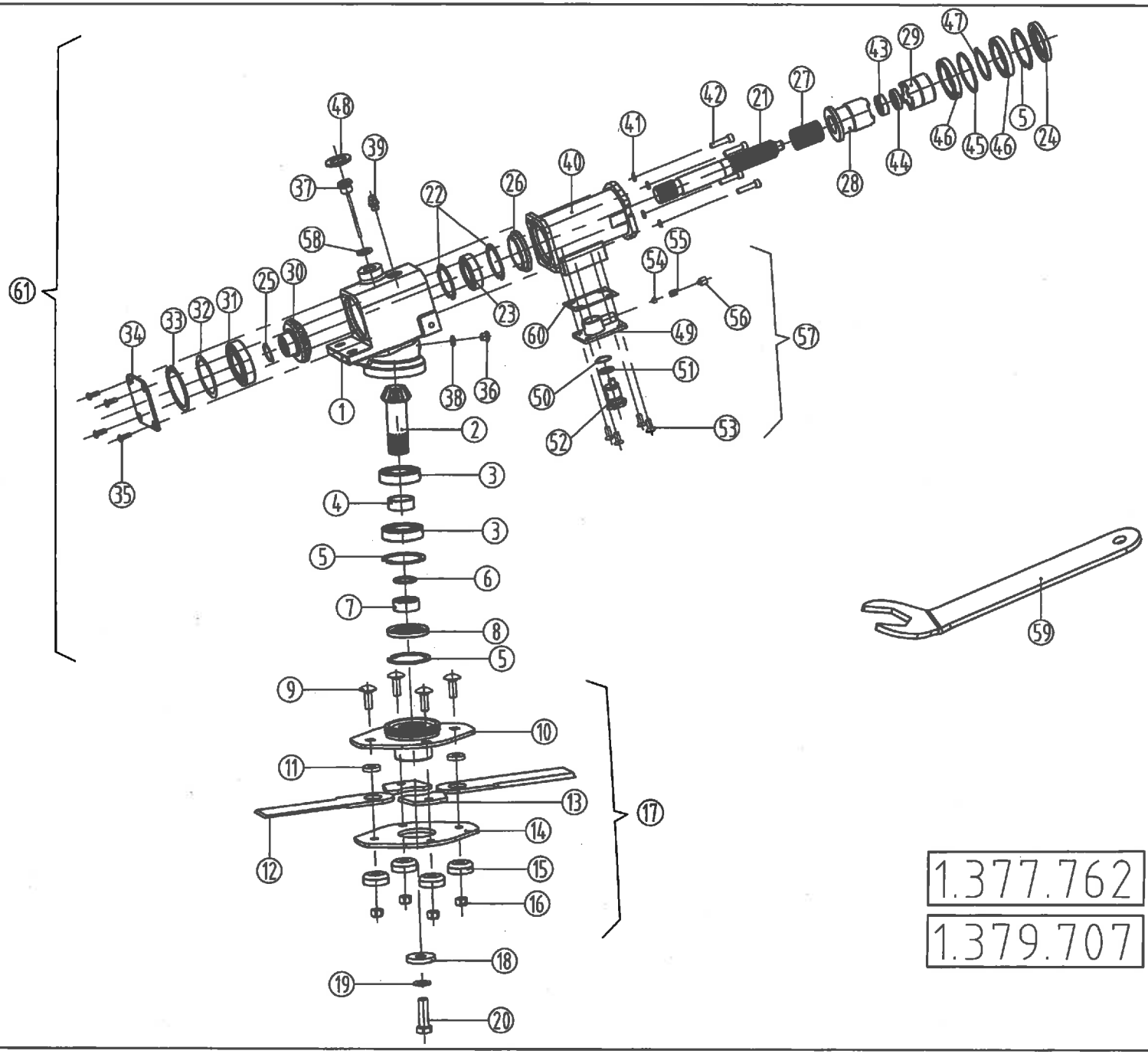

1.377.762	70cm,76,2cm 28";30"
1.379.707	50cm,56cm 20";22"

2014

13/A

STALK CHOPPER

Ref.	Part Number	Description		6306	6108 6208	6308	6309	6112 6212	6312	6316
54.	85609000000	Bearing ball		6	8	8	9	12	12	16
55.	1.327.389	Spring		6	8	8	9	12	12	16
56.	1.327.390	Set screw		6	8	8	9	12	12	16
-	Loctite 243	Threadlocking agent								
57.	1.377.782	Switch assy		6	8	8	9	12	12	16
-	Loctite 5910	RTV silicone								
58.	05200200024	Copper washer 20x24 - DIN7603		6	8	8	9	12	12	16
59.	1.378.697	Wrench		1	1	1	1	1	1	1
60.	1.379.298	Gasket	2013 -2016.	6	8	8	9	12	12	16
61.	1.379.465	Chopper gearbox ass.		6	8	8	9	12	12	16

Note: application of shims depends on the backlash of the gears.

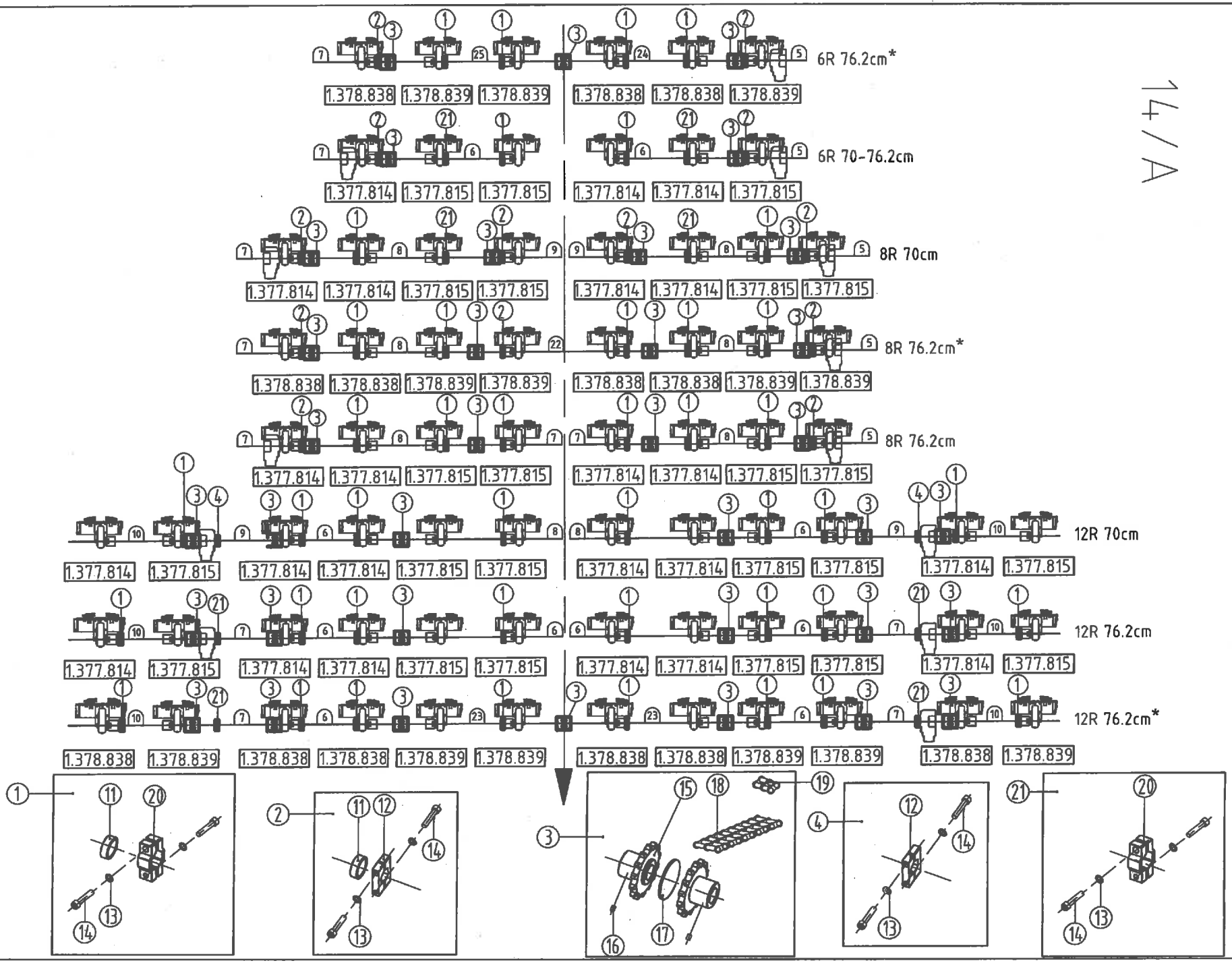
6R 76.2cm*
1.378.838 1.378.839 1.378.839 1.378.838 1.378.838 1.378.839
6R 70-76.2cm
1.377.814 1.377.815 1.377.815 1.377.814 1.377.814 1.377.815
8R 70cm
1.377.814 1.377.814 1.377.815 1.377.815 1.377.814 1.377.814 1.377.815 1.377.815
8R 76.2cm*
1.378.838 1.378.838 1.378.839 1.378.839 1.378.838 1.378.838 1.378.839 1.378.839
8R 76.2cm
1.377.814 1.377.814 1.377.815 1.377.815 1.377.814 1.377.814 1.377.815 1.377.815
12R 70cm
1.377.814 1.377.815 1.377.814 1.377.814 1.377.815 1.377.815 1.377.814 1.377.814 1.377.815 1.377.815 1.377.814 1.377.815
12R 76.2cm
1.377.814 1.377.815 1.377.814 1.377.814 1.377.815 1.377.815 1.377.814 1.377.814 1.377.815 1.377.815 1.377.814 1.377.815
12R 76.2cm*
1.378.838 1.378.839 1.378.838 1.378.838 1.378.839 1.378.839 1.378.838 1.378.838 1.378.839 1.378.839 1.378.838 1.378.839

2016

SNAPPING UNIT DRIVE - RIGID MODELS

Ref.	Part Number	Description		6306 70	6306	6308 70	6308	6312 70	6312
5.	1.376.517	Hexagonal shaft l=548		1	1	1	1	-	-
6.	1.376.502	Hexagonal shaft l=1220		2	2	-	-	2	4
7.	1.376.503	Hexagonal shaft l=480		1	1	1	3	-	2
8.	1.376.504	Hexagonal shaft l=1582		-	-	2	2	-	-
8.	1.376.506	Hexagonal shaft l=960		-	-	-	-	2	-
9.	1.376.505	Hexagonal shaft l=340		-	-	2	-	2	-
10.	1.376.501	Hexagonal shaft l=1214		-	-	-	-	2	2
11.	1.376.490	Spacer		6	6	8	8	8	8
12.	1.351.164	Clamp - half piece only		4	4	8	4	4	-
13.	72210000060	Spring washer M10 - DIN128/A		12	12	16	16	20	24
14.	80210004066	Bolt - socket head M10x40 - DIN912/8.8		12	12	16	16	20	24
15.	1.354.663	Sprocket		4	4	8	8	12	12
16.	80108001266	Set screw M8x12 - DIN916/8.8		4	4	8	8	12	12
17.	1.354.660	Disk		2	2	4	4	6	6
18.	1.355.403	Duplex chain t=1"		2	2	4	4	6	6
19.	84501000032	Connecting link t=1"		2	2	4	4	6	6
20.	1.355.909	Clamp - half piece only		8	8	8	12	16	20
22.	1.379.071	Hexagonal shaft l=1636*		-	-	-	1	-	-
23.	1.378.400	Hexagonal shaft l=1560*		-	-	-	-	-	2
24.	1.379.706	Hexagonal shaft l=1826	2014→	-	1	-	-	-	-
25.	1.377.809	Hexagonal shaft l=1350	2014→2015	-	1	-	-	-	-
25.	1.373.890	Hexagonal shaft l=1436	2016→	-	1	-	-	-	-

Note: item 1 includes items 11, 13, 14, 20
item 2 includes items 11, 12, 13, 14
item 3 includes items 15, 16, 17, 18, 19
item 4 includes items 12, 13, 14
item 21 includes items 13, 14, 20

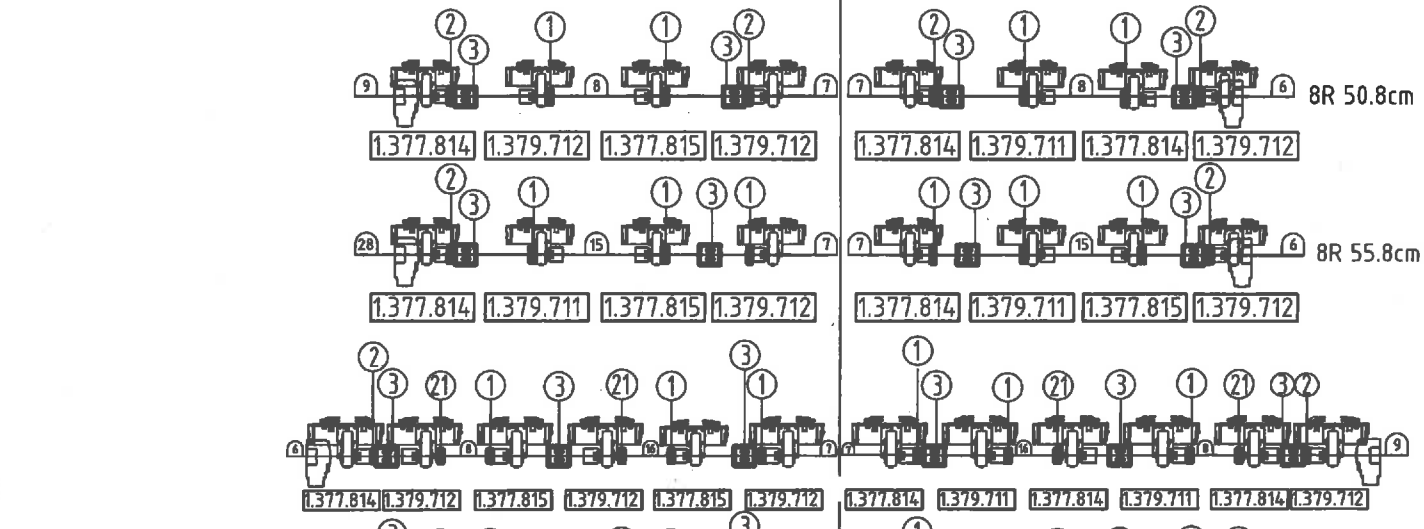
8R 50.8cm
1.377.814 1.379.712 1.377.815 1.379.712
1.377.814 1.379.711 1.377.814 1.379.712
8R 55.8cm
1.377.814 1.379.711 1.377.815 1.379.712
1.377.814 1.379.711 1.377.815 1.379.712
12R 50,8cm
1.377.814 1.379.712 1.377.815 1.379.712 1.377.815 1.379.712
1.377.814 1.379.711 1.377.814 1.379.711 1.377.814 1.379.712
12R 50,8cm*
1.378.838 1.378.839 1.378.839 1.378.839 1.378.839 1.378.839
1.378.838 1.378.838 1.378.838 1.378.838 1.378.838 1.378.839
12R 55,8cm
1.377.814 1.379.712 1.377.814 1.379.711 1.377.815 1.379.712
1.377.814 1.379.711 1.377.815 1.379.712 1.377.814 1.379.712
16R 76.2cm
1.377.814 1.377.814 1.377.814 1.377.815 1.377.814 1.377.814 1.377.815 1.377.815
1.377.814 1.377.814 1.377.815 1.377.815 1.377.814 1.377.815 1.377.815 1.377.815

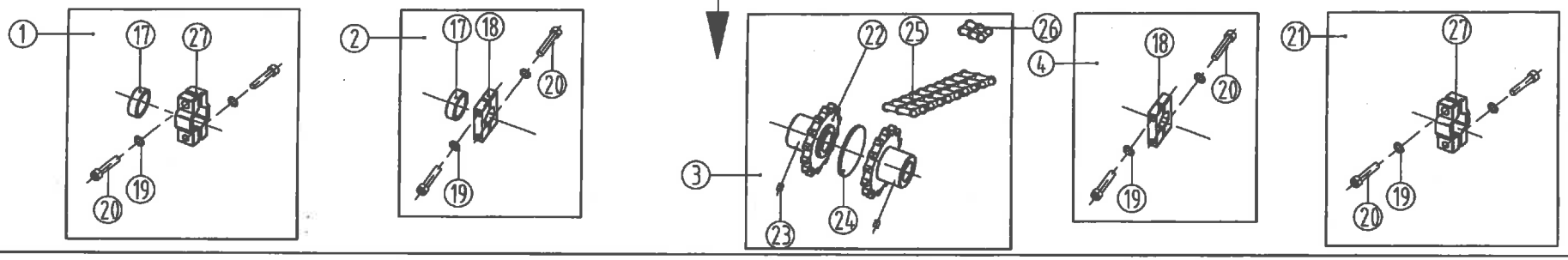
1
17
27
20
19
2
17
18
20
19
3
22
25
26
23
24
4
18
20
19
21
27
20
19

2015

SNAPPING UNIT DRIVE - RIGID MODELS

Ref.	Part Number	Description		6108	6208	6112	6212	6316
5.	1.376.502	Hexagonal shaft l=1220		-	-	-	-	4
6.	1.376.503	Hexagonal shaft l=480		1	1	1	-	2
7.	1.376.505	Hexagonal shaft l=340		2	2	2	2	-
7.	1.379.924	Hexagonal shaft l=1058*		-	-	1	-	-
8.	1.376.506	Hexagonal shaft l=960		2	-	2	-	-
9.	1.376.517	Hexagonal shaft l=548		1	-	1	-	-
10.	1.377.809	Hexagonal shaft l=1350		-	-	-	-	1
11.	1.377.811	Hexagonal shaft l=1360		-	-	-	-	2
12.	1.379.096	Hexagonal shaft l=1385		-	-	-	-	1
13.	1.379.586	Hexagonal shaft l=1093		-	-	-	2	-
14.	1.379.587	Hexagonal shaft l=600		-	-	-	2	-
15.	1.379.588	Hexagonal shaft l=1114		-	2	-	2	-
16.	1.379.589	Hexagonal shaft l=1030		-	-	2	-	-
17.	1.376.490	Spacer		8	8	12	10	12
18.	1.351.164	Clamp - half piece only		-	-	4	-	-
19.	72210000060	Spring washer M10-DIN128/A		16	16	24	20	28
20.	80210004066	Bolt - socket head M10x40 - DIN912/8.8		16	16	24	20	28
22.	1.354.663	Sprocket		-	8	12	12	16
22.	1.376.519	Sprocket		8	-	-	-	-
23.	80108001266	Set screw M8x12 - DIN916/8.8		8	8	12	12	16
24.	1.354.660	Disk		4	4	6	6	8
25.	1.355.403	Duplex chain t=1"		4	4	6	6	8
26.	84501000032	Connecting link t=1"		4	4	6	6	8
27.	1.355.909	Clamp - half piece only		16	16	20	20	28
28.	1.378.399	Hexagonal shaft l=579		-	1	-	-	-

Note: item 1 includes items 17, 19, 20, 27
item 2 includes items 17, 18, 19, 20
item 3 includes items 22, 23, 24, 25, 26
item 4 includes items 18, 19, 20
item 21 includes items 19, 20, 27

Note: the items marked with * are only valid for machines without a chopper!

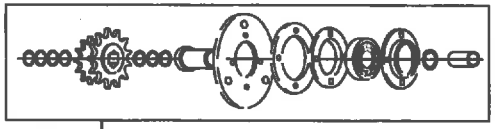

Lásd 9. o. 58-68 tételek
See pg. 9 items 58-68

15/A

4+2R 70 cm / INT

4+2R 76.2-80cm / INT

4+2R 70-76.2-80cm / EXT

4+2x2R-76.2-80 / INT

4+2x2R-70-76.2 -80/ EXT

5+2x2R-76.2 / INT

6+2x3R
70 / INT

6+2x3R
76.2 / INT

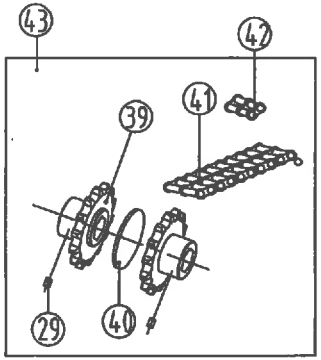

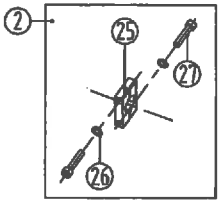

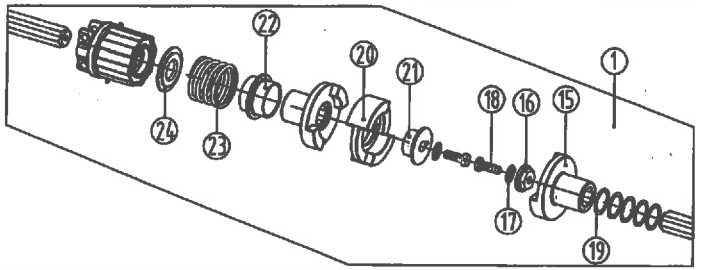

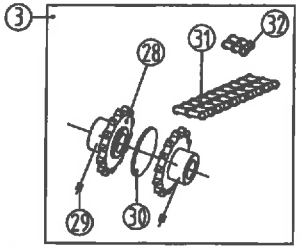

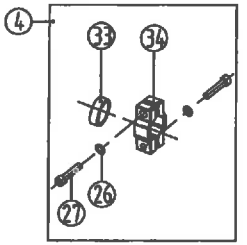

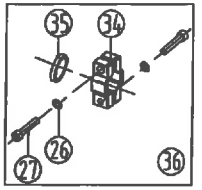

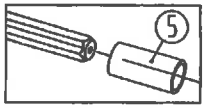

2016

SNAPPING UNIT DRIVE - FOLDING MODELS

Ref.	Part Number	Description		6306F 70cm INT.	6306F 70cm EXT.	6306F INT.	6306F EXT.	6308F INT.	6308F EXT.	6309F INT.	6312-70F INT.	6312F INT.
5.	1.376.562	Spacer (l=231)		-	-	-	2	-	2	-	-	-
5.	1.377.123	Spacer (l=169)		-	2	-	-	-	-	-	-	-
6.	1.377.812	Hexagonal shaft l=588		1	1	1	1	-	-	-	-	-
7.	1.376.516	Hexagonal shaft l=223		-	-	2	-	2	-	2	2	2
8.	1.376.506	Hexagonal shaft l=960		-	-	2	-	2	-	-	-	-
9.	1.376.503	Hexagonal shaft l=480		-	-	-	-	-	-	-	2	2
9.	1.376.517	Hexagonal shaft l=548		-	1	-	1	-	-	-	-	-
9.	1.377.813	Hexagonal shaft l=588		1	-	1	-	-	-	-	-	-
9.	1.377.508	Hexagonal shaft l=1720		-	-	-	-	-	-	1	-	-
10.	1.376.502	Hexagonal shaft l=1220		-	-	-	2	1	2	2	-	-
10.	1.377.125	Hexagonal shaft l=1065		-	2	-	-	-	-	-	-	-
10.	1.377.125	Hexagonal shaft l=1065	→2014	2	-	-	-	-	-	-	-	-
11.	1.377.809	Hexagonal shaft l=1350		-	-	-	-	1	1	1	-	-
12.	1.378.398	Hexagonal shaft l=544		-	-	-	-	-	-	-	1	1
13.	1.378.399	Hexagonal shaft l=579		-	-	-	-	-	-	-	1	1
14.	1.379.588	Hexagonal shaft l=1114		-	-	-	-	-	-	-	2	-
14.	1.377.048	Hexagonal shaft l=1320		-	-	-	-	-	-	-	-	2
15.	1.377.808	Clutch half		4	4	4	4	4	4	4	4	4
16.	1.377.806	Inset		2	2	2	2	2	2	2	2	2
17.	71701000060	External tab washer		4	4	4	4	4	4	4	4	4
18.	79410003066	Hex bolt M10x30 - DIN933/8.8		4	4	4	4	4	4	4	4	4
19.	71637047100	Shim 37x47x1 - DIN988		10	-	10	-	10	-	10	10	10
20.	1.377.804	Inset		2	2	2	2	2	2	2	2	2
21.	1.377.805	Inset		2	2	2	2	2	2	2	2	2
22.	1.377.807	Spacer (l=44)		2	2	2	2	2	2	2	2	2
23.	1.351.215	Spring		2	2	2	2	2	2	2	2	2
24.	1.351.163	Disk		2	2	2	2	2	2	2	2	2
25.	1.351.164	Clamp - half piece only		-	4	4	4	4	-	4	4	4
26.	72210000060	Spring washer M10 - DIN128/A		14	12	18	12	20	16	20	28	28
27.	80210004066	Bolt - socket head M10x40 - DIN912/8.8		14	12	18	12	20	16	20	28	28
28.	1.376.519	Sprocket		-	-	4	-	4	-	4	8	8
29.	80108001266	Set screw M8x12 - DIN916/8.8		-	-	4	-	4	-	4	12	12
30.	1.354.660	Disk		-	-	2	-	2	-	2	4	4
31.	1.355.403	Duplex chain t=1"		-	-	2	-	2	-	2	4	4
32.	84501000032	Connecting link t=1"		-	-	2	-	2	-	2	4	4
33.	1.376.490	Spacer (l=15)		3	3	7	5	8	8	8	12	12
34.	1.355.909	Clamp - half piece only		14	8	14	8	16	16	16	24	24
35.	1.377.676	Spacer (l=5)		-	2	-	-	-	-	-	-	-
35.	1.377.676	Spacer (l=5)	→2014	2	-	-	-	-	-	-	-	-
37.	1.377.810	Hexagonal shaft l=1260		-	-	-	-	-	1	-	-	-
38.	1.373.890	Hexagonal shaft l=1436		-	-	-	-	-	-	-	2	-

Note: item 1 includes items 15-24 (1.378.427)
item 2 includes items 25-27
item 3 includes items 28-32
item 4 includes items 26, 27, 33, 34
item 36 includes items 26, 27, 34, 35

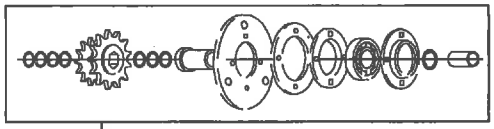

Lásd 9. o. 58-68 tételek
See pg. 9 items 58-68

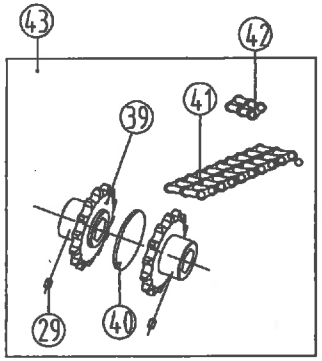

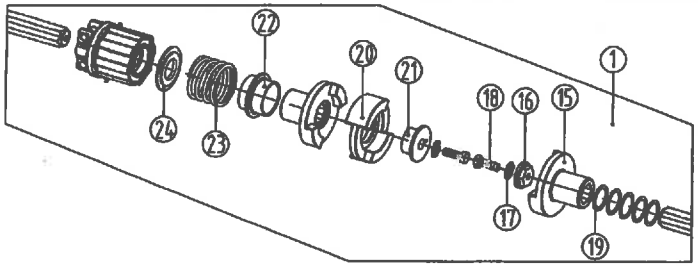

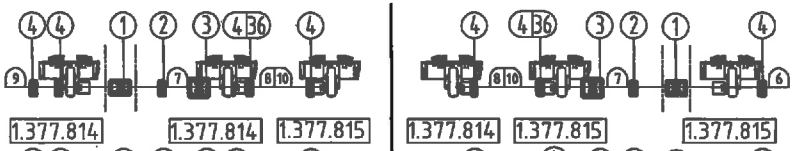

4+2R 70 cm / INT

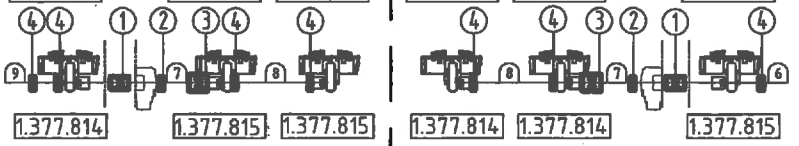

4+2R 76.2-80cm / INT

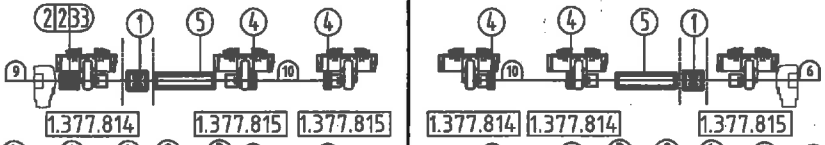

4+2R 70-76.2-80cm / EXT

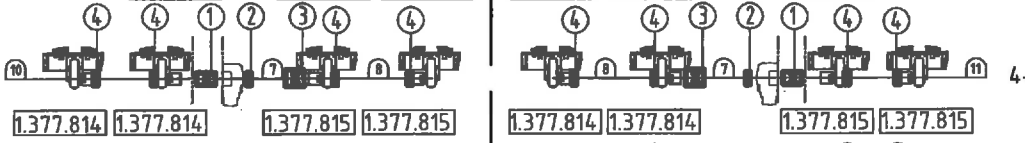

4+2x2R-76.2-80 / INT

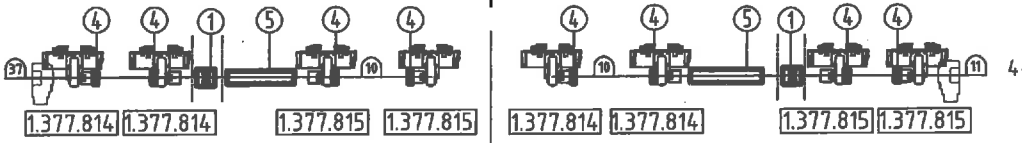

4+2x2R-70-76.2 -80/ EXT

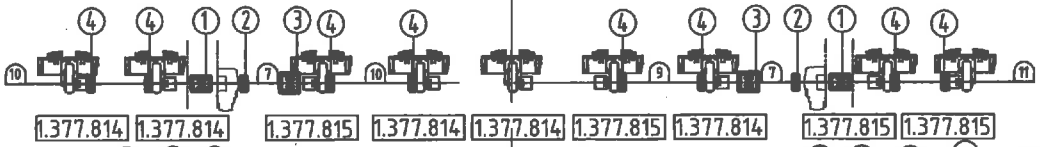

5+2x2R-76.2 / INT

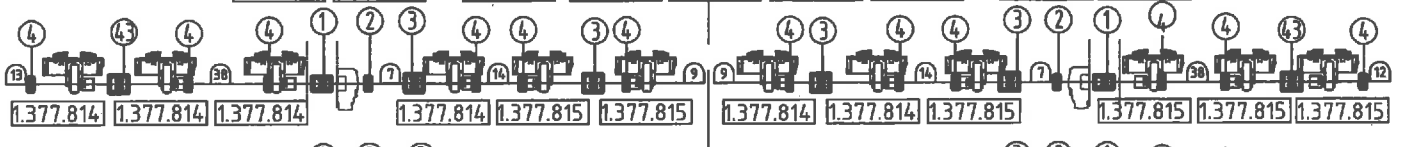

6+2x3R 70 / INT

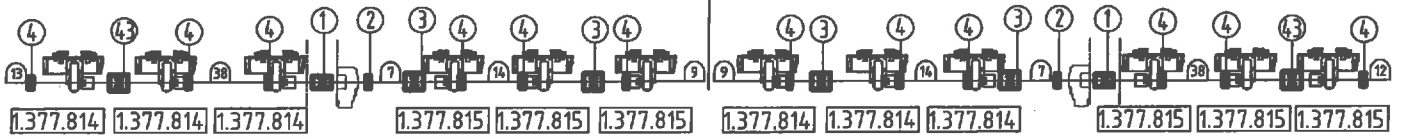

6+2x3R 76.2 / INT

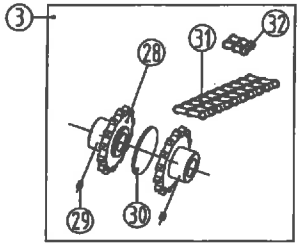

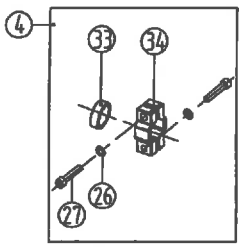

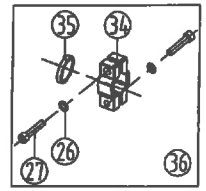

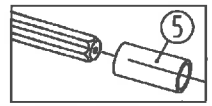

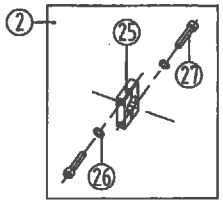

2016

SNAPPING UNIT DRIVE - FOLDING MODELS

Ref.	Part Number	Description		6306F 70cm INT.	6306F 70cm EXT.	6306F INT.	6306F EXT.	6308F INT.	6308F EXT.	6309F INT.	6312-70F INT.	6312F INT.
38.	1.378.400	Hexagonal shaft l=1560		-	-	-	-	-	-	-	-	2
39.	1.378.897	Sprocket		-	-	-	-	-	-	-	4	4
40.	1.378.896	Disk		-	-	-	-	-	-	-	2	2
41.	1.300.200	Duplex chain t=3/4"		-	-	-	-	-	-	-	2	2
42.	84503400010	Connecting link t=3/4"		-	-	-	-	-	-	-	2	2

Note: item 1 includes items 15-24 (1.378.427)
item 2 includes items 25-27
item 3 includes items 28-32
item 4 includes items 26, 27, 33, 34
item 36 includes items 26, 27, 34, 35

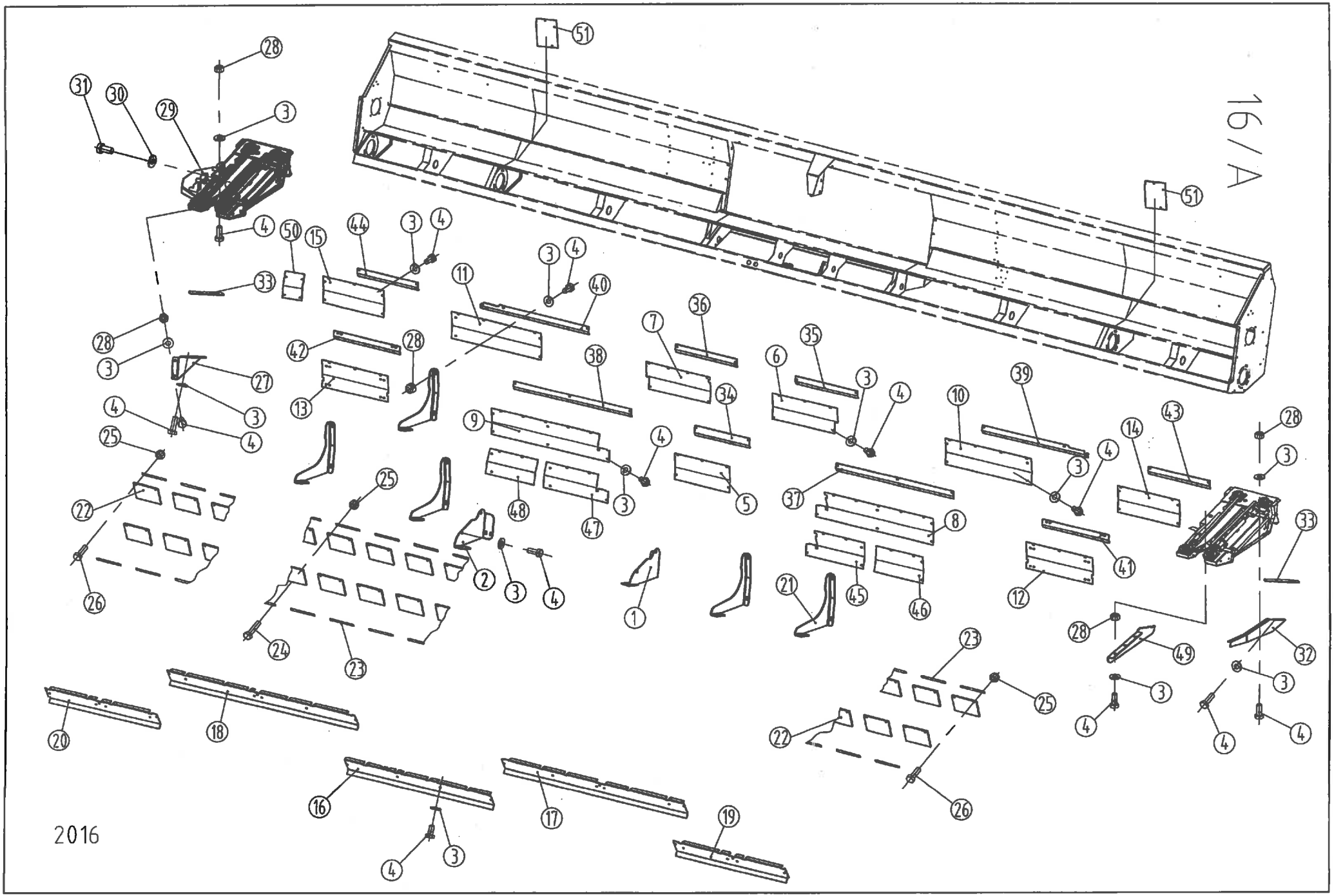
16/A
2016

DRIVE-SHIELDS - RIGID

Ref.	Part Number	Description		6306-70cm	6306	6308-70cm	6308	6312-70cm	6312
1.	1.377.364	Bracket - LH	→2015	1	1	1	1	1	1
2.	1.377.365	Bracket - RH	→2015	1	1	1	1	1	1
3.	91623938761	Spring washer - A8		124	124	168	168	257	257
4.	79408002066	Hex bolt -M8x20 - DIN933/8.8		81	81	107	107	164	164
5.	1.378.296	Shield - back (l=536)	→2015	1	1	1	1	1	1
5.	1.378.972	Shield - back (l=1572)	2016→	1	1	1	1	1	1
6.	1.378.297	Shield - back (l=635)	→2015	1	1	1	1	1	1
7.	1.378.298	Shield - back (l=627)	→2015	1	1	1	1	1	1
8.	1.378.360	Shield - back (l=934)	→2015	1	-	-	-	-	-
8.	1.373.157	Shield - back (l=1197)	2016→	1	-	-	-	-	-
8.	1.378.299	Shield - back (l=1089)	→2015	-	1	-	-	-	-
8.	1.379.423	Shield - back (l=1352)	2016→	-	1	-	-	-	-
8.	1.378.301	Shield - back (l=1143)	→2015	-	-	1	1	-	-
8.	1.373.169	Shield - back (l=1897)	2016→	-	-	1	-	-	-
8.	1.379.748	Shield - back (l=2114)	2016→	-	-	-	1	-	-
9.	1.378.361	Shield - back (l=977)	→2015	1	-	-	-	-	-
9.	1.373.158	Shield - back (l=1232)	2016→	1	-	-	-	-	-
9.	1.378.300	Shield - back (l=1132)	→2015	-	1	-	-	-	-
9.	1.379.424	Shield - back (l=1387)	2016→	-	1	-	-	-	-
9.	1.378.302	Shield - back (l=1151)	→2015	-	-	1	1	-	-
9.	1.373.170	Shield - back (l=1932)	2016→	-	-	1	-	-	-
9.	1.379.749	Shield - back (l=2149)	2016→	-	-	-	1	-	-
10.	1.378.307	Shield - back (l=837)	→2015	-	-	-	-	-	1
10.	1.378.969	Shield - back (l=1427)	2016→	-	-	-	-	-	1
10.	1.378.799	Shield - back (l=588)	→2015	-	-	-	-	1	-
10.	1.373.139	Shield - back (l=2062)	2016→	-	-	-	-	1	-
11.	1.378.308	Shield - back (l=877)	→2015	-	-	-	-	-	1
11.	1.378.975	Shield - back (l=1427)	2016→	-	-	-	-	-	1
11.	1.378.791	Shield - back (l=623)	→2015	-	-	-	-	1	-
11.	1.373.141	Shield - back (l=2097)	2016→	-	-	-	-	1	-
12.	1.378.305	Shield - back (l=644)	→2015	-	-	-	1	-	1
12.	1.378.964	Shield - back (l=882)	2016→	-	-	-	-	-	1
12.	1.378.800	Shield - back (l=556)	→2015	-	-	-	-	1	-
12.	1.373.140	Shield - back (l=1232)	2016→	-	-	-	-	1	-
13.	1.378.306	Shield - back (l=679)	→2015	-	-	-	1	-	-
13.	1.378.305	Shield - back (l=644)	→2015	-	-	-	-	-	1
13.	1.378.970	Shield - back (l=882)	2016→	-	-	-	-	-	1
13.	1.378.793	Shield - back (l=521)	→2015	-	-	-	-	1	-
13.	1.373.142	Shield - back (l=1232)	2016→	-	-	-	-	1	-
14.	1.378.303	Shield - back (l=427)	→2015	-	-	1	-	-	-
14.	1.378.309	Shield - back (l=597)	→2015	-	-	-	-	-	1
14.	1.378.963	Shield - back (l=1324)	2016→	-	-	-	-	-	1
14.	1.378.802	Shield - back (l=595)	→2015	-	-	-	-	1	-
15.	1.378.304	Shield - back (l=462)	→2015	-	-	1	-	-	-
15.	1.378.310	Shield - back (l=592)	→2015	-	-	-	-	-	1
15.	1.378.971	Shield - back (l=1359)	2016→	-	-	-	-	-	1
15.	1.378.796	Shield - back (l=628)	→2015	-	-	-	-	1	-
16.	1.377.341	Shield - bottom (l=1758)	→2015	1	-	1	-	1	-
16.	1.373.143	Shield - bottom (l=1577)	2016→	1	-	1	-	1	-
16.	1.377.338	Shield - bottom (l=1758)	→2015	-	1	-	1	-	1
16.	1.378.978	Shield - bottom (l=1577)	2016→	-	1	-	1	-	1
17.	1.377.346	Shield - bottom (l=2205)	→2015	-	-	-	-	-	1
17.	1.378.979	Shield - bottom (l=1423)	2016→	-	-	-	-	-	1
17.	1.378.805	Shield - bottom (l=1959)	→2015	-	-	-	-	1	-
17.	1.373.146	Shield - bottom (l=1321)	2016→	-	-	-	-	1	-
18.	1.377.347	Shield - bottom (l=2253)	→2015	-	-	-	-	-	1
18.	1.378.977	Shield - bottom (l=1427)	2016→	-	-	-	-	-	1
18.	1.378.804	Shield - bottom (l=2002)	→2015	-	-	-	-	1	-
18.	1.373.144	Shield - bottom (l=1355)	2016→	-	-	-	-	1	-
19.	1.377.558	Shield - bottom (l=1116)	→2015	1	-	-	-	-	-
19.	1.373.156	Shield - bottom (l=1209)	2016→	1	-	-	-	-	-
19.	1.377.339	Shield - bottom (l=1271)	→2015	-	1	-	-	-	-

Note: the items marked with * are only valid for machines with chopper! The items marked with ** are only valid for machines without a chopper! 2016-> : only for machines with higher serial number than xxxxx16xxx

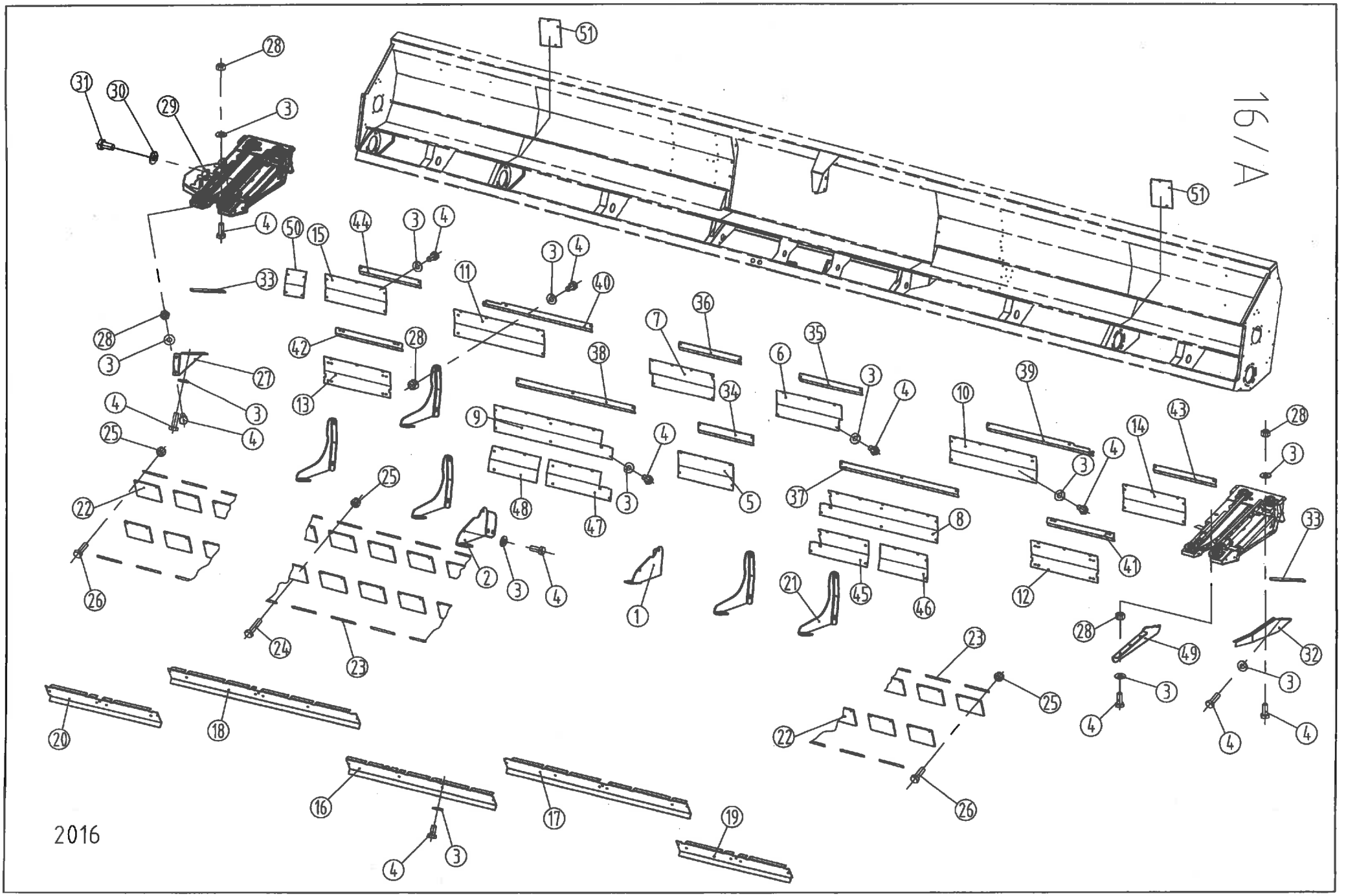
16/A
2016

DRIVE-SHIELDS - RIGID

Ref.	Part Number	Description		6306-70cm	6306	6308-70cm	6308	6312-70cm	6312
19.	1.379.422	Shield - bottom (l=1364)	2016→	-	1	-	-	-	-
19.	1.377.342	Shield - bottom (l=1816)	→2015	-	-	1	-	-	-
19.	1.373.168	Shield - bottom (l=1909)	2016→	-	-	1	-	-	-
19.	1.377.344	Shield - bottom (l=2033)	→2015	-	-	-	1	-	-
19.	1.379.750	Shield - bottom (l=2126)	2016→	-	-	-	1	-	-
19.	1.377.348	Shield - bottom (l=1350)	→2015	-	-	-	-	-	1
19.	1.378.980	Shield - bottom (l=2225)	2016→	-	-	-	-	-	1
19.	1.378.806	Shield - bottom (l=1255)	→2015	-	-	-	-	1	-
19.	1.373.147	Shield - bottom (l=1986)	2016→	-	-	-	-	1	-
20.	1.377.559	Shield - bottom (l=1159)	→2015	1	-	-	-	-	-
20.	1.373.155	Shield - bottom (l=1247)	2016→	1	-	-	-	-	-
20.	1.377.340	Shield - bottom (l=1314)	→2015	-	1	-	-	-	-
20.	1.379.421	Shield - bottom (l=1402)	2016→	-	1	-	-	-	-
20.	1.377.343	Shield - bottom (l=1859)	→2015	-	-	1	-	-	-
20.	1.373.167	Shield - bottom (l=1947)	2016→	-	-	1	-	-	-
20.	1.377.345	Shield - bottom (l=2076)	→2015	-	-	-	1	-	-
20.	1.379.751	Shield - bottom (l=2164)	2016→	-	-	-	1	-	-
20.	1.377.349	Shield - bottom (l=1345)	→2015	-	-	-	-	-	1
20.	1.378.976	Shield - bottom (l=2259)	2016→	-	-	-	-	-	1
20.	1.378.807	Shield - bottom (l=1255)	→2015	-	-	-	-	1	-
20.	1.373.145	Shield - bottom (l=1990)	2016→	-	-	-	-	1	-
21.	1.377.362	Stiffener - LH	→2015	2	2	4	4	6	6
21.	1.377.363	Stiffener - RH	→2015	2	2	4	4	6	6
21.	1.378.973	Stiffener - LH	2016→	2	2	3	3	3	4
21.	1.378.974	Stiffener - RH	2016→	2	2	3	3	3	4
22.*	1.376.131	Rubber plate		20	20	28	28	40	44
23.*	1.376.127	Flat		20	20	28	28	40	44
24.*	79408003566	Hex bolt-M8x35 - DIN933/8.8		19	19	27	27	39	43
25.*	74900800066	Hex nut - plastic insert M8 - DIN982		21	21	29	29	41	45
26.*	79408002566	Hex bolt -M8x25 - DIN933/8.8		2	2	2	2	2	2
27.*	1.376.599	Stiffener		1	1	1	1	1	1
28.	73508000066	Hex nut -M8 - DIN934		53	53	71	71	105	105
29.*	1.379.099	Knife-shield		1	1	1	1	1	1
30.*	91623938861	Spring washer- A10		6	6	6	6	6	6
31.*	79410002066	Hex bolt -M10x20 - DIN933/8.8		6	6	6	6	6	6
32.*	1.376.600	Side-shield		1	1	1	1	1	1
33.	1.377.372	Spacer		2	2	2	2	2	2
34.	1.377.864	Stiffener plate (l=536)		1	1	1	1	1	1
35.	1.377.865	Stiffener plate (l=608)		1	1	1	1	1	1
36.	1.377.866	Stiffener plate (l=600)		1	1	1	1	1	1
37.	1.377.871	Stiffener plate (l=1143)		-	-	1	1	-	-
37.	1.378.764	Stiffener plate (l=1175)		-	-	-	-	1	1
37.	1.377.869	Stiffener plate (l=1120)		1	-	-	-	-	-
37.	1.377.867	Stiffener plate (l=1275)		-	1	-	-	-	-
38.	1.377.872	Stiffener plate (l=1151)		-	-	1	1	-	-
38.	1.378.765	Stiffener plate (l=1183)		-	-	-	-	1	1
38.	1.377.870	Stiffener plate (l=1163)		1	-	-	-	-	-
38.	1.377.868	Stiffener plate (l=1318)		-	1	-	-	-	-
39.	1.377.877	Stiffener plate (l=774)		-	-	-	-	-	1
39.	1.378.798	Stiffener plate (l=1023)		-	-	-	-	1	-
40.	1.377.878	Stiffener plate (l=1063)		-	-	-	-	-	1
40.	1.378.792	Stiffener plate (l=809)		-	-	-	-	1	-
41.	1.377.875	Stiffener plate (l=644)		-	-	-	-	-	1
41.	1.377.876	Stiffener plate (l=865)		-	-	-	1	-	-
41.	1.378.801	Stiffener plate (l=556)		-	-	-	-	1	-

Note: the items marked with * are only valid for machines with chopper! The items marked with ** are only valid for machines without a chopper! 2016-> : only for machines with higher serial number than xxxxx16xxx

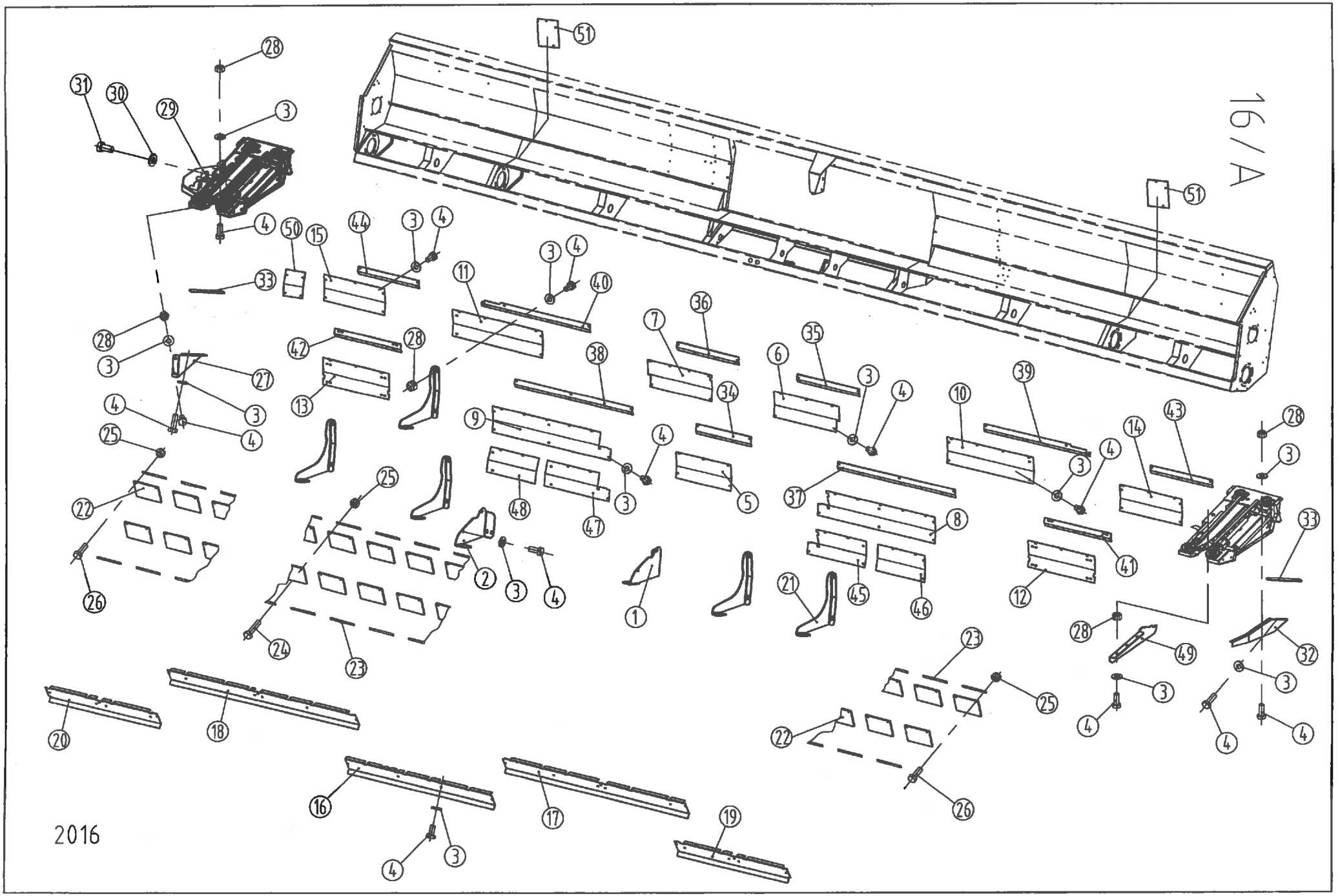
16/A
2016

DRIVE-SHIELDS - RIGID

Ref.	Part Number	Description		6306-70cm	6306	6308-70cm	6308	6312-70cm	6312
42.	1.377.875	Stiffener plate (l=644)		-	-	-	-	-	1
42.	1.378.060	Stiffener plate (l=830)		-	-	-	1	-	-
42.	1.378.795	Stiffener plate (l=521)		-	-	-	-	1	-
43.	1.377.879	Stiffener plate (l=597)		-	-	-	-	-	1
43.	1.377.873	Stiffener plate (l=613)		-	-	1	-	-	-
43.	1.378.803	Stiffener plate (l=595)		-	-	-	-	1	-
44.	1.377.880	Stiffener plate (l=592)		-	-	-	-	-	1
44.	1.377.874	Stiffener plate (l=648)		-	-	1	-	-	-
44.	1.378.797	Stiffener plate (l=628)		-	-	-	-	1	-
45.	1.378.340	Stiffener plate (l=520)		-	-	-	-	1	1
46.	1.378.751	Stiffener plate (l=621)		-	-	-	-	1	1
47.	1.378.341	Stiffener plate (l=527)		-	-	-	-	1	1
48.	1.378.752	Stiffener plate (l=621)		-	-	-	-	1	1
49.*	1.379.534	Deflector plate	2014→	5	5	7	7	11	11
50.**	1.379.708	Shield	2015→	1	1	1	1	1	1
51.**	1.373.619	Shield	2016→	1	1	1	1	1	1

Note: the items marked with * are only valid for machines with chopper! The items marked with ** are only valid for machines without a chopper! 2016-> : only for machines with higher serial number than xxxxx16xxx

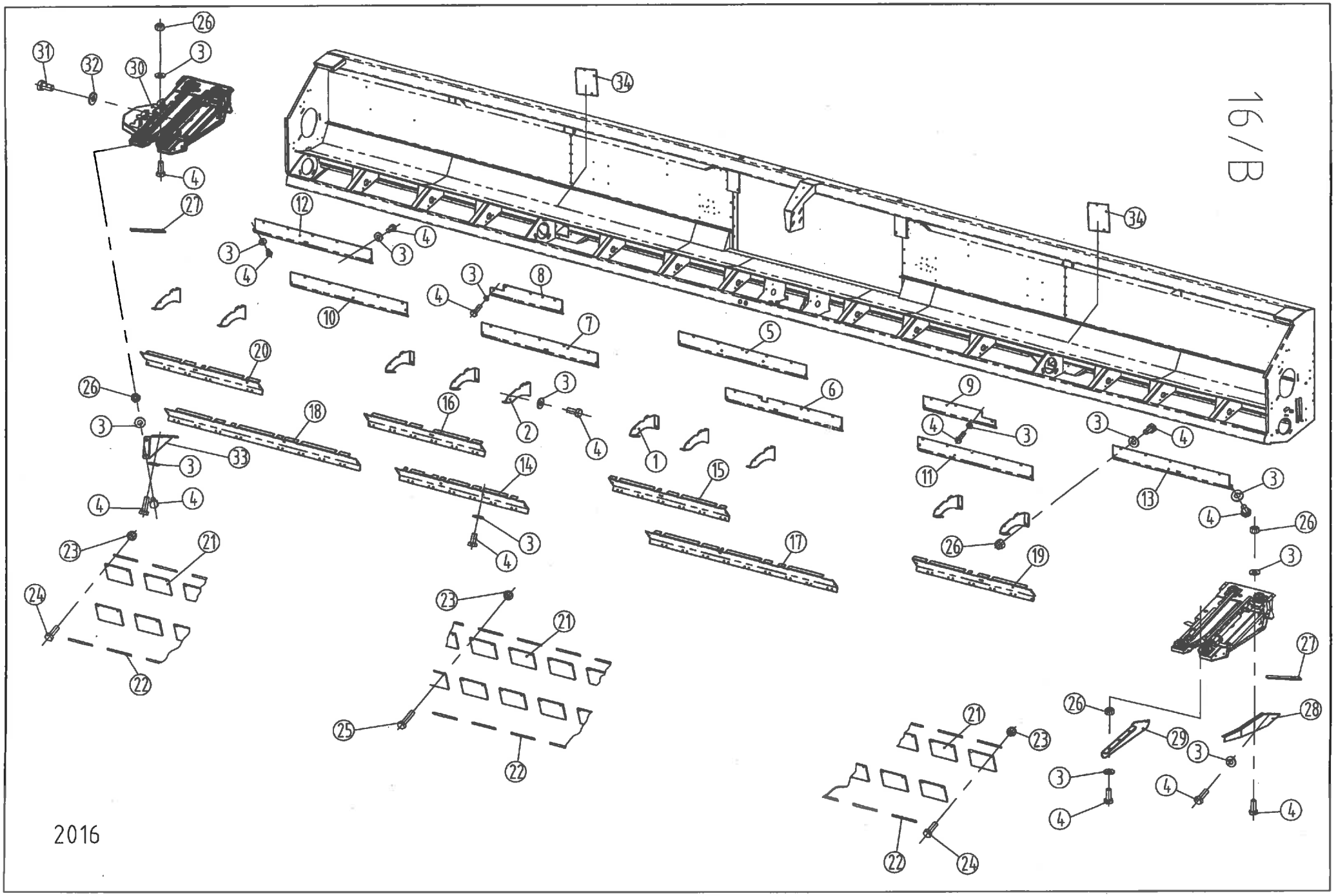
16/B
2016

DRIVE-SHIELDS - RIGID (2014→)

Ref.	Part Number	Description		8R 50cm	8R 56cm	12R 50cm	12R 56cm	16R 76,2cm
1.	1.378.973	Bracket - LH		2	2	3	2	5
2.	1.378.974	Bracket - RH		2	2	3	2	5
3.	91623938761	Spring washer - A8		130	130	164	174	277
4.	79408002066	Hex bolt M8x20 - DIN933/8.8		77	78	96	104	172
5.	1.378.972	Shield - back (l=1572)		-	-	-	-	1
5.	1.379.644	Shield - back (l=1397)		1	-	1	-	-
5.	1.379.590	Shield - back (l=1498)		-	1	-	1	-
6.	1.378.969	Shield - back (l=1427)		-	-	-	-	1
6.	1.379.645	Shield - back (l=2328)		-	-	1	-	-
6.	1.379.591	Shield - back (l=1312)		-	1	-	1	-
6.	1.373.113	Shield - back (l=1483,5)		1	-	-	-	-
7.	1.378.975	Shield - back (l=1427)		-	-	-	-	1
7.	1.379.646	Shield - back (l=2364)		-	-	1	-	-
7.	1.379.592	Shield - back (l=1438,5)		-	1	-	1	-
7.	1.373.114	Shield - back (l=1348)		1	-	-	-	-
8.	1.378.970	Shield - back (l=882)		-	-	-	-	1
8.	1.379.594	Shield - back (l=1106)		-	-	-	1	-
9.	1.378.964	Shield - back (l=882)		-	-	-	-	1
9.	1.379.593	Shield - back (l=1106)		-	-	-	1	-
10.	1.379.035	Shield - back (l=1434)		-	-	-	-	1
11.	1.379.034	Shield - back (l=1399)		-	-	-	-	1
12.	1.379.036	Shield - back (l=1447)		-	-	-	-	1
13.	1.379.037	Shield - back (l=1447)		-	-	-	-	1
14.	1.378.978	Shield - bottom (l=1577)		-	-	-	-	1
14.	1.379.647	Shield - bottom (l=1398)		1	-	1	-	-
14.	1.379.595	Shield - bottom l=1498)		-	1	-	1	-
15.	1.378.979	Shield - bottom (l=1423)		-	-	-	-	1
15.	1.379.648	Shield - bottom (l=2344)		-	-	1	-	-
15.	1.379.596	Shield - bottom (l=853)		-	-	-	1	-
15.	1.373.115	Shield - bottom (l=1328)		1	-	-	-	-
15.	1.373.082	Shield - bottom (l=1496)		-	1	-	-	-
16.	1.378.977	Shield - bottom (l=1427)		-	-	-	-	1
16.	1.379.649	Shield - bottom (l=2379)		-	-	1	-	-
16.	1.379.597	Shield - bottom (l=793)		-	-	-	1	-
16.	1.373.116	Shield - bottom (l=1363)		1	-	-	-	-
16.	1.373.083	Shield - bottom (l=1451)		-	1	-	-	-
17.	1.379.041	Shield - bottom (l=2301)		-	-	-	-	1
17.	1.379.598	Shield - bottom (l=1758,5)		-	-	-	1	-
18.	1.379.042	Shield - bottom (l=2343)		-	-	-	-	1
18.	1.379.599	Shield - bottom (l=1773,5)		-	-	-	1	-
19.	1.379.038	Shield - bottom (l=1446)		-	-	-	-	1
20.	1.379.043	Shield - bottom (l=1438)		-	-	-	-	1
21.*	1.376.131	Rubber plate		20	21	30	33	60
22.*	1.376127	Flat		20	21	30	33	60
23.*	74908000066	Hex nut - plastic insert M8 - DIN982		21	22	31	34	63
24.*	79408002566	Hex bolt M8x25 - DIN933/8.8		2	2	2	2	4
25.*	79408003566	Hex bolt M8x35 - DIN933/8.8		19	20	29	32	59
26.*	73508000066	Hex nut M8 - DIN934		61	62	76	80	158
27.*	1.377.372	Spacer		2	2	2	2	2
28.*	1.376.600	Side-shield		1	1	1	1	1
29.*	1.379.534	Deflector plate		-	-	-	-	15
29.*	1.379.535	Deflector plate		7	7	11	11	-
30.*	1.379.099	Knife-shield		1	1	1	1	1
31.*	79410002066	Hex bolt M10x20 - DIN933/8.8		6	6	6	6	6
32.*	91623938861	Spring washer - A10		6	6	6	6	6
33.*	1.376.599	Stiffener		1	1	1	1	1
34.**	1.373.619	Shield		1	1	1	1	1

Note: the items marked with * are only valid for machines with chopper!
The items marked with ** are only valid for machines without a chopper!

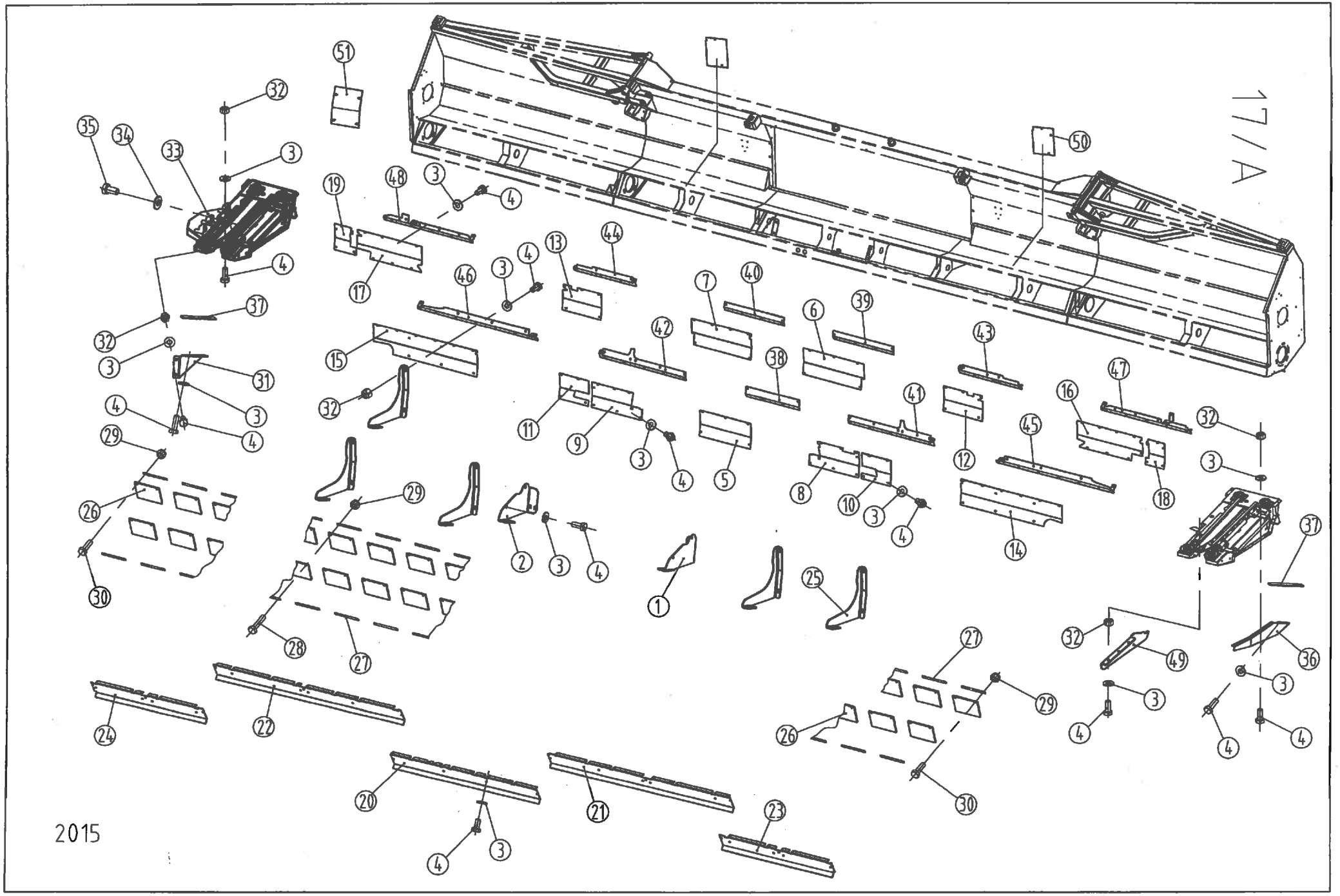
17/A
2015

DRIVE-SHIELDS - FOLDABLE

Ref.	Part Number	Description		6306F 70	6306F	6308F	6309F	6312-70F	6312F
1.	1.377.364	Bracket - LH		-	-	-	1	-	-
1.	1.377.364	Bracket - LH	→2014	1	1	1	-	1	1
1.	1.378.973	Bracket - LH	2015→	1	1	1	-	1	1
2.	1.377.365	Bracket - RH		-	-	-	1	-	-
2.	1.377.365	Bracket - RH	→2014	1	1	1	-	1	1
2.	1.378.974	Bracket - RH	2015→	1	1	1	-	1	1
3.	91623938761	Spring washer - A8		115	155	199	228	282	282
4.	79408002066	Hex bolt M8x20 - DIN933/8.8		74	100	129	146	188	188
5.	1.378.296	Shield - back (l=536)	→2015	-	1	1	-	-	1
5.	1.373.810	Shield - back (l=1764)	2016→	-	1	1	-	-	-
5.	1.378.296	Shield - back (l=536)	→2014	1	-	-	-	-	-
5.	1.373.293	Shield - back (l=1578)	2015→	1	-	-	-	-	-
5.	1.378.353	Shield - back (l=367)		-	-	-	1	-	-
5.	1.373.957	Shield - back (l=2124)	2016→	-	-	-	-	-	1
5.	1.373.976	Shield - back (l=1478)		-	-	-	-	1	-
6.	1.378.297	Shield - back (l=635)		-	-	-	1	-	-
6.	1.378.297	Shield - back (l=635)	→2014	1	1	1	-	-	1
7.	1.378.298	Shield - back (l=627)	→2014	1	1	1	-	-	1
7.	1.378.354	Shield - back (l=796)		-	-	-	1	-	-
8.	1.378.315	Shield - back (l=538)	→2015	-	1	1	-	-	-
8.	1.373.811	Shield - back (l=729)	2016→	-	1	1	-	-	-
8.	1.378.340	Shield - back (l=520)	→2015	-	-	-	-	-	1
8.	1.373.958	Shield - back (l=1311)	2016→	-	-	-	-	-	1
8.	1.373.978	Shield - back (l=1419)		-	-	-	-	1	-
9.	1.378.316	Shield - back (l=546)	→2015	-	1	1	-	-	-
9.	1.373.812	Shield - back (l=729)	2016→	-	1	1	-	-	-
9.	1.378.341	Shield - back (l=527.5)	→2015	-	-	-	-	-	1
9.	1.373.959	Shield - back (l=1311)	2016→	-	-	-	-	-	1
9.	1.373.977	Shield - back (l=1417)		-	-	-	-	1	-
10.	1.378.321	Shield - back (l=306)	→2015	-	-	-	-	-	1
11.	1.378.322	Shield - back (l=306.5)	→2015	-	-	-	-	-	1
12.	1.378.323	Shield - back (l=408)	→2015	-	-	-	-	-	1
12.	1.378.334	Shield - back (l=939)	→2015	-	-	-	1	-	-
12.	1.378.311	Shield - back (l=383)	→2014	1	-	-	-	-	-
12.	1.373.294	Shield - back (l=667)	2015→	1	-	-	-	-	-
13.	1.378.324	Shield - back (l=408)	→2015	-	-	-	-	-	1
13.	1.378.335	Shield - back (l=907)		-	-	-	1	-	-
13.	1.378.312	Shield - back (l=391)	→2014	1	-	-	-	-	-
13.	1.373.295	Shield - back (l=667)	2015→	1	-	-	-	-	-
14.	1.378.317	Shield - back (l=537)		-	-	1	1	-	-
14.	1.378.325	Shield - back (l=1055)	→2015	-	-	-	-	-	1
14.	1.373.960	Shield - back (l=1125)	2016→	-	-	-	-	-	1
14.	1.373.979	Shield - back (l=1001)		-	-	-	-	1	-
15.	1.378.318	Shield - back (l=537)		-	-	1	1	-	-
15.	1.378.326	Shield - back (l=1090)	→2015	-	-	-	-	-	1
15.	1.373.961	Shield - back (l=1160)	2016→	-	-	-	-	-	1
15.	1.373.980	Shield - back (l=1036)		-	-	-	-	1	-
16.	1.378.327	Shield - back (l=681)	→2015	-	-	-	-	-	1
16.	1.373.962	Shield - back (l=909)	2016→	-	-	-	-	-	1
16.	1.378.319	Shield - back (l=437)		-	-	1	1	-	-
16.	1.378.313	Shield - back (l=276)	→2015	-	1	-	-	-	-
16.	1.378.313	Shield - back (l=276)	→2014	1	-	-	-	-	-
16.	1.373.296	Shield - back (l=512)	2016→	1	1	-	-	-	-
16.	1.373.981	Shield - back (l=909)		-	-	-	-	1	-
17.	1.378.328	Shield - back (l=681)	→2015	-	-	-	-	-	1
17.	1.373.995	Shield - back (l=909)	2016→	-	-	-	-	-	1
17.	1.378.320	Shield - back (l=472)		-	-	1	1	-	-
17.	1.378.314	Shield - back (l=311)	→2015	-	1	-	-	-	-
17.	1.378.314	Shield - back (l=311)	→2014	1	-	-	-	-	-
17.	1.373.297	Shield - back (l=549)	2016→	1	1	-	-	-	-
17.	1.373.996	Shield - back (l=909)		-	-	-	-	1	-
18.	1.378.224	Shield - back (l=195)	→2015	1	1	1	-	-	1
18.	1.378.224	Shield - back (l=195)		-	-	-	1	-	-

Note: the items marked with * are only valid for machines with chopper! The items marked with ** are only valid for machines without a chopper!
2016-> : only for machines with higher serial number than xxxxx16xxx

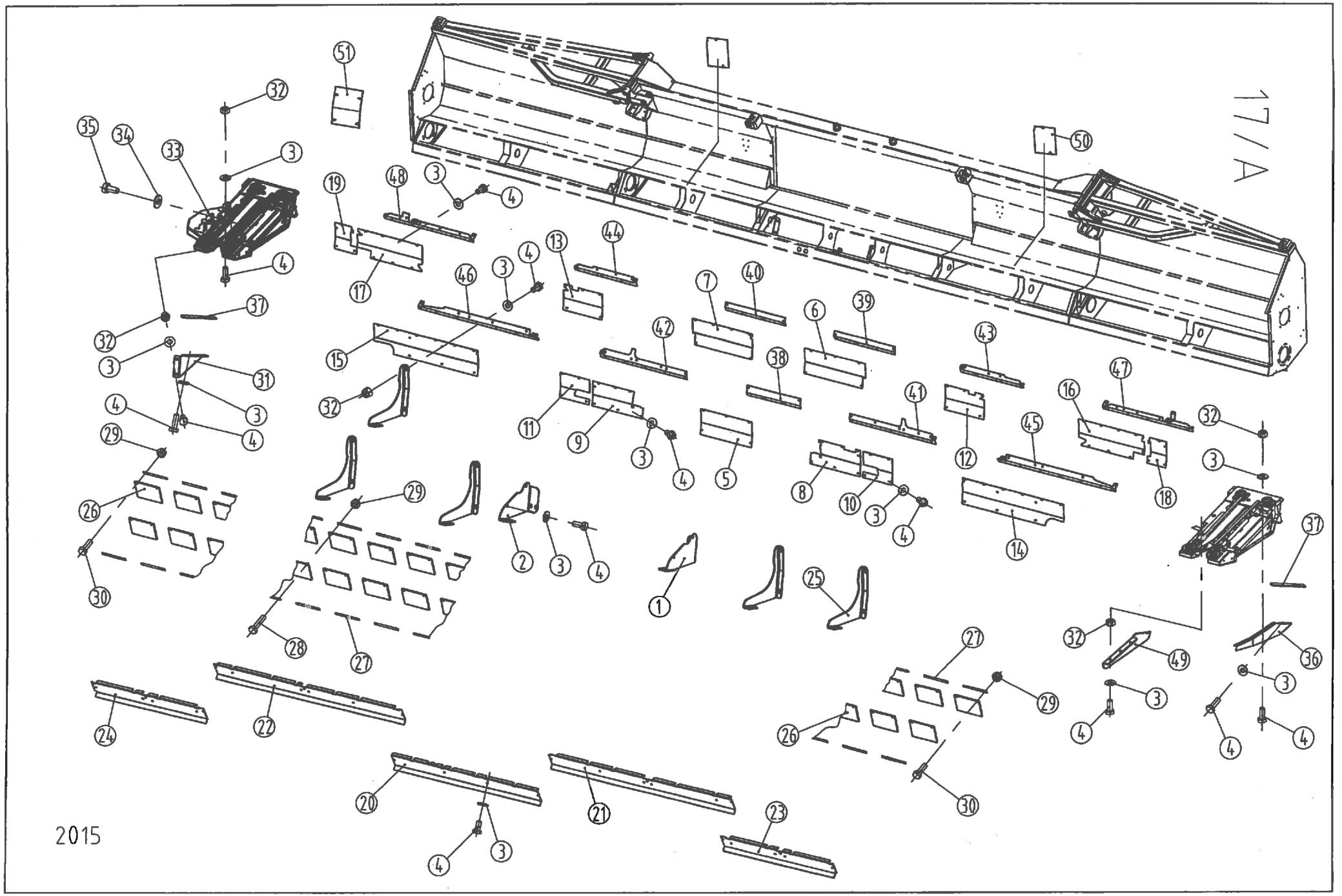
17/A
2015

DRIVE-SHIELDS - FOLDABLE

Ref.	Part Number	Description		6306F 70	6306F	6308F	6309F	6312-70F	6312F
19.	1.378.225	Shield - back (l=230)	→2015	1	1	1	-	-	1
19.	1.378.225	Shield - back (l=230)		-	-	-	1	-	-
20.	1.377.338	Shield - bottom (l=1758)	→2015	-	1	1	-	-	1
20.	1.373.847	Shield - bottom (l=1763)	2016→	-	1	1	-	-	-
20.	1.377.341	Shield - bottom (l=1758)	→2014	1	-	-	-	-	-
20.	1.373.302	Shield - bottom (l=1577)	2015→	1	-	-	-	-	-
20.	1.377.515	Shield - bottom (l=1758)		-	-	-	1	-	-
20.	1.373.963	Shield - bottom (l=2123)	2016→	-	-	-	-	-	1
20.	1.373.982	Shield - bottom (l=1470)		-	-	-	-	1	-
21.	1.377.354	Shield - bottom (l=728)	→2015	-	1	1	-	-	-
21.	1.373.814	Shield - bottom (l=717)	2016→	-	1	1	-	-	-
21.	1.377.356	Shield - bottom (l=1490)	→2015	-	-	-	-	-	1
21.	1.373.965	Shield - bottom (l=1311)	2016→	-	-	-	-	-	1
21.	1.377.350	Shield - bottom (l=573)	→2014	1	-	-	-	-	-
21.	1.373.299	Shield -bottom (l=666)	2015→	1	-	-	-	-	-
21.	1.377.516	Shield - bottom (l=1129)		-	-	-	1	-	-
21.	1.373.983	Shield - bottom (l=1421)		-	-	-	-	1	-
22.	1.377.355	Shield - bottom (l=736)	→2015	-	1	1	-	-	-
22.	1.373.813	Shield - bottom (l=731)	2016→	-	1	1	-	-	-
22.	1.377.357	Shield - bottom (l=1498)	→2015	-	-	-	-	-	1
22.	1.373.964	Shield - bottom (l=1311)	2016→	-	-	-	-	-	1
22.	1.377.351	Shield - bottom (l=581)	→2014	1	-	-	-	-	-
22.	1.373.298	Shield - bottom (l=669)	2015→	1	-	-	-	-	-
22.	1.377.517	Shield - bottom (l=1097)		-	-	-	1	-	-
22.	1.373.984	Shield - bottom (l=1421)		-	-	-	-	1	-
23.	1.377.688	Shield - bottom (l=539)	→2015	-	1	-	-	-	-
23.	1.377.688	Shield - bottom (l=539)	→2014	1	-	-	-	-	-
23.	1.373.300	Shield - bottom (l=541)	2016→	1	1	-	-	-	-
23.	1.377.700	Shield - bottom (l=1301)		-	-	1	1	-	-
23.	1.378.348	Shield - bottom (l=2048)	→2015	-	-	-	-	-	1
23.	1.373.967	Shield - bottom (l=2065)	2016→	-	-	-	-	-	1
23.	1.373.986	Shield - bottom (l=1941)		-	-	-	-	1	-
24.	1.377.689	Shield - bottom (l=574)	→2015	-	1	-	-	-	-
24.	1.377.689	Shield - bottom (l=574)	→2014	1	-	-	-	-	-
24.	1.373.301	Shield - bottom (l=576)	2016→	1	1	-	-	-	-
24.	1.377.701	Shield - bottom (l=1336)		-	-	1	1	-	-
24.	1.378.349	Shield - bottom (l=2083)	→2015	-	-	-	-	-	1
24.	1.373.966	Shield - bottom (l=2100)	2016→	-	-	-	-	-	1
24.	1.373.985	Shield - bottom (l=1976)		-	-	-	-	1	-
25.	1.377.362	Stiffener - LH		-	-	-	8	-	-
25.	1.377.363	Stiffener - RH		-	-	-	7	-	-
25.	1.377.362	Stiffener - LH	→2014	4	4	6	-	6	6
25.	1.377.363	Stiffener - RH	→2014	4	4	6	-	5	5
26.*	1.376.131	Rubber plate		21	23	29	32	43	43
27.*	1.376.127	Flat		21	23	29	32	43	43
28.*	79408003566	Hex bolt M8x35 - DIN933/8.8		20	24	26	27	38	38
29.*	74908000066	Hex nut - plastic insert M8 - DIN982		30	30	36	39	48	48
30.*	79408003566	Hex bolt M8x25 - DIN933/8.8		10	6	10	12	10	10
31.*	1.376.599	Stiffener		1	1	1	1	1	1
32.	73508000066	Hex nut M8 - DIN934		66	66	83	94	112	112
33.*	1.376.007	Knife-shield		1	1	1	1	1	1
33.*	1.379.099	Knife-shield		1	1	1	1	1	1
34.*	91623938861	Spring washer - A10		6	6	6	6	6	6
35.*	79410002066	Hex bolt M10x20 - DIN933/8.8		6	6	6	6	6	6
36.*	1.376.600	Side-shield		1	1	1	1	1	1
37.*	1.377.372	Spacer		2	2	2	2	2	2
38.	1.377.864	Stiffener plate (l=536)		-	1	1	-	-	1
38.	1.377.864	Stiffener plate (l=536)	→2014	1	-	-	-	-	-
38.	1.378.355	Stiffener plate (l=367)		-	-	-	1	-	-
39.	1.377.865	Stiffener plate (l=608)		-	1	1	1	-	1
39.	1.377.865	Stiffener plate (l=608)	→2014	1	-	-	-	-	-
40.	1.377.866	Stiffener plate (l=600)		-	1	1	-	-	1
40.	1.377.866	Stiffener plate (l=600)	→2014	1	-	-	-	-	-
40.	1.378.356	Stiffener plate (l=769)		-	-	-	1	-	-
41.	1.378.342	Stiffener plate (l=860)		-	-	-	-	-	1

Note: the items marked with * are only valid for machines with chopper! The items marked with ** are only valid for machines without a chopper!
2018-> : only for machines with higher serial number than xxxxx16xxx

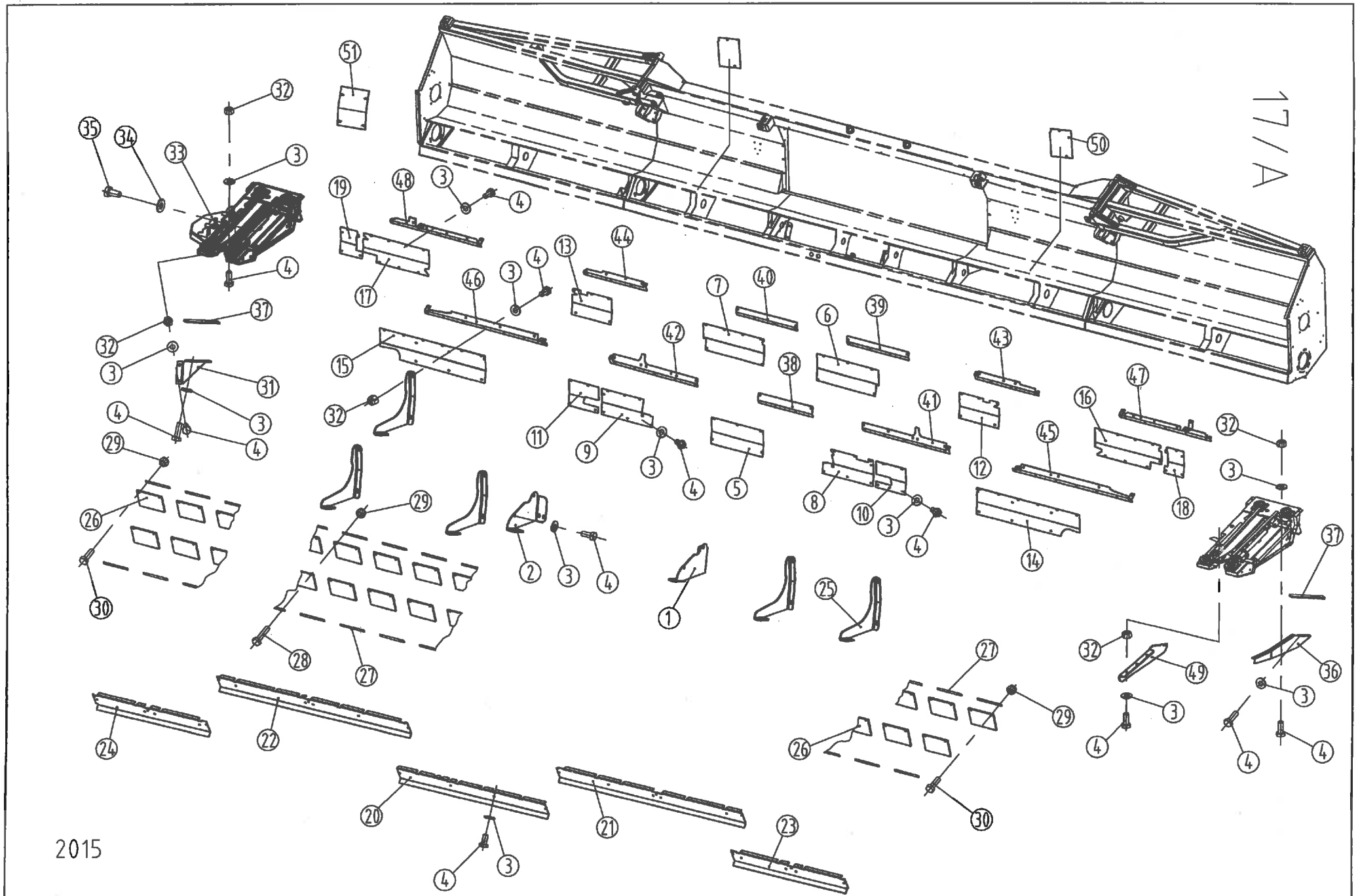
17/A
2015

DRIVE-SHIELDS - FOLDABLE

Ref.	Part Number	Description		6306F 70	6306F	6308F	6309F	6312-70F	6312F
42.	1.378.343	Stiffener plate (l=867.5)		-	-	-	-	-	1
43.	1.378.345	Stiffener plate (l=624)		-	-	-	-	-	1
43.	1.377.885	Stiffener plate (l=724)		-	1	1	-	-	-
43.	1.377.891	Stiffener plate (l=1125)		-	-	-	1	-	-
43.	1.377.881	Stiffener plate (l=569)	→2014	1	-	-	-	-	-
44.	1.378.346	Stiffener plate (l=624.5)		-	-	-	-	-	1
44.	1.377.886	Stiffener plate (l=732)		-	1	1	-	-	-
44.	1.377.892	Stiffener plate (l=1093)		-	-	-	1	-	-
44.	1.377.882	Stiffener plate (l=577)	→2014	1	-	-	-	-	-
45.	1.378.338	Stiffener plate (l=1172)		-	-	-	-	-	1
46.	1.378.339	Stiffener plate (l=1207)		-	-	-	-	-	1
47.	1.378.350	Stiffener plate (l=897)		-	-	-	-	-	1
47.	1.378.336	Stiffener plate (l=1309)		-	-	1	1	-	-
47.	1.377.883	Stiffener plate (l=547)		-	1	-	-	-	-
47.	1.377.883	Stiffener plate (l=547)	→2014	1	-	-	-	-	-
48.	1.378.351	Stiffener plate (l=897)		-	-	-	-	-	1
48.	1.378.337	Stiffener plate (l=1344)		-	-	1	1	-	-
48.	1.377.884	Stiffener plate (l=582)		-	1	-	-	-	-
48.	1.377.884	Stiffener plate (l=582)	→2014	1	-	-	-	-	-
49.*	1.379.534	Deflector plate	2014→	5	5	7	8	-	11
50.	1.373.619	Shield - back	2015→	2	2	2	-	-	-
51.**	1.379.708	Shield	2015→	1	1	1	1	1	1

Note: the items marked with * are only valid for machines with chopper! The items marked with ** are only valid for machines without a chopper!
2015-> : only for machines with higher serial number than xxxxx16xxx

Elektromos törölécállító
Electric snapping plate adjuster

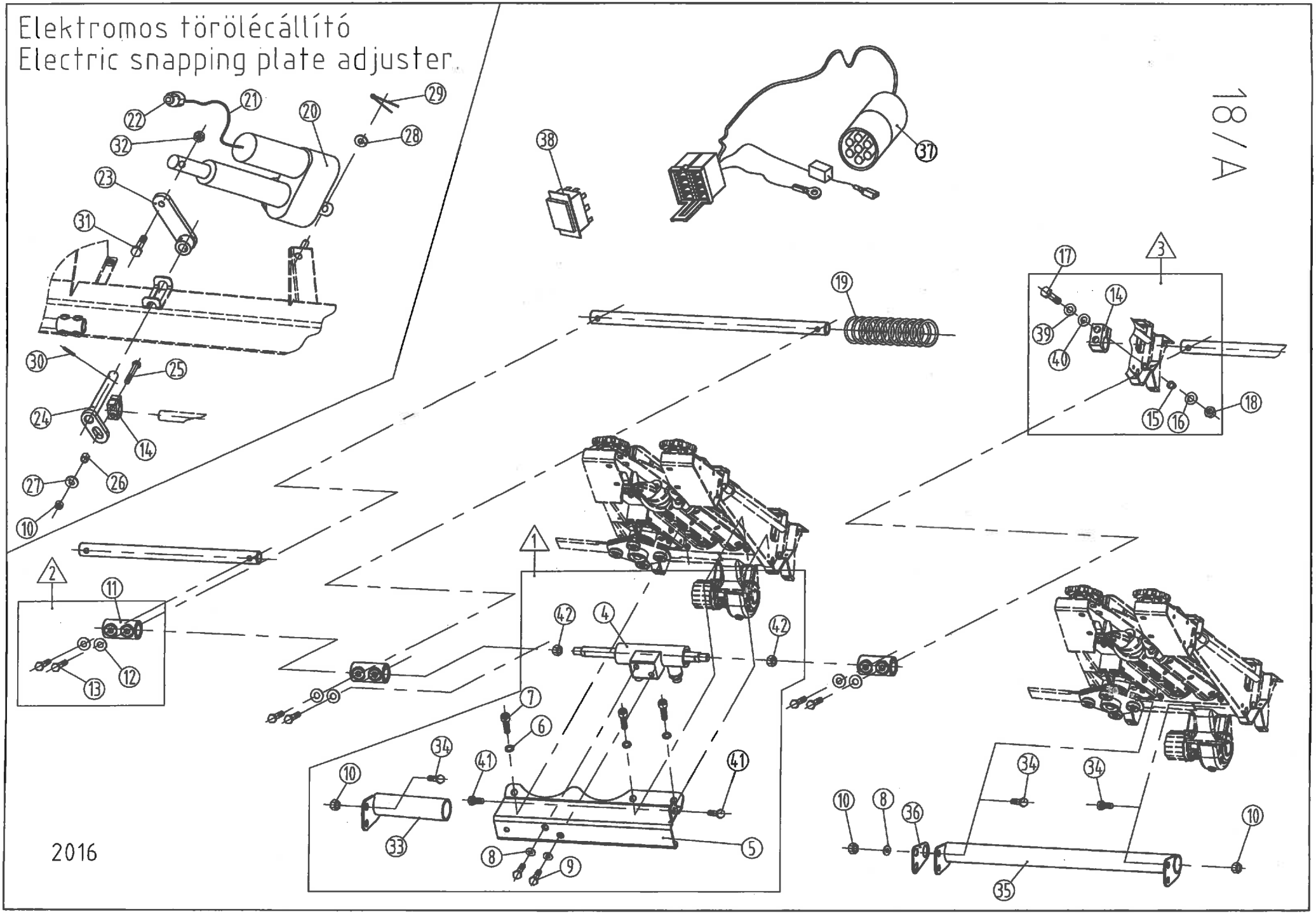

ELECTRIC & HYDRAULIC SNAPPING PLATE ADJUSTER

Ref.	Part Number	Description		6306, 6306 70	6108, 6208	6308, 6308-70	6112, 6212	6312, 6312-70	6316	6306F, 6306F 70	6308F	6309F	6312F, 6312-70F
4.	1.376.104	Hydraulic cylinder	→2015	1	1	1	1	1	1	1	1	1	1
4.	1.373.725	Hydraulic cylinder	2016→	1	1	1	1	1	1	1	1	1	1
5.	1.377.839	Cylinder console	→2015	1	1	1	1	1	1	1	1	1	1
5.	1.373.730	Cylinder console	2016→	1	1	1	1	1	1	1	1	1	1
6.	71810000060	Spring washer M10 - DIN7980 **(see note below!)**		3	3	3	3	3	3	3	3	3	3
7.	80210003563	Hex socket head cap bolt M10x35 - DIN912/10.9 **(see note below!)**		3	3	3	3	3	3	3	3	3	3
8.	91623938861	Spring washer- A10		2	2	2	2	2	2	2	2	2	2
9.	79410001666	Hex bolt -M10x16 - DIN933/8.8		2	2	2	2	2	2	2	2	2	2
10.	74910000066	Hex nut - plastic insert M10 - DIN985		25	32	33	48	49	65	25	33	37	49
11.	1.376.105	Bridge-piece		5	7	7	11	11	15	3	5	6	9
12.	91623938761	Spring washer - A8		10	14	14	22	22	30	6	10	12	18
13.	79408004066	Hex bolt M8x40 - DIN933/8.8		10	14	14	22	22	30	6	10	12	18
14.	1.308.195	Clamp		7	8	9	12	13	17	7	9	10	13
15.	1.376.006	Bushing	→2014	6	8	8	12	12	16	6	8	9	12
15.	1.373.648	Bushing	2015→	6	8	8	12	12	16	6	8	9	12
16.	71410000060	Washer M10 - DIN125		6	8	8	12	12	16	6	8	9	12
17.	79410006066	Hex bolt M10x60 - DIN933/8.8		6	8	8	12	12	16	6	8	9	12
18.	70710000066	Lock nut M10 - DIN980		6	8	8	12	12	16	6	8	9	12
19.	1.375.772	Spring		-	-	-	-	-	-	2	2	2	2
20.	1.308.899	Electric actuator D12 20A 804		1	-	1	-	1	1	1	1	1	1
21.	1.310.553	Wire - 1.2m		1	-	1	-	1	1	1	1	1	1
22.	1.310.551	Connector (12V, 25A)		1	-	1	-	1	1	1	1	1	1
23.	1.376.000	Arm		1	-	1	-	1	1	1	1	1	1
24.	1.376.003	Shaft		1	-	1	-	1	1	1	1	1	1
25.	79410007066	Hex bolt M10x70 - DIN933/8.8		1	-	1	-	1	1	1	1	1	1
26.	1.328.607	Bushing		1	-	1	-	1	1	1	1	1	1
27.	1.375.497	Washer		1	-	1	-	1	1	1	1	1	1
28.	71412000060	Washer M12 - DIN125		1	-	1	-	1	1	1	1	1	1
29.	72404002860	Split pin 4x28 - DIN94		1	-	1	-	1	1	1	1	1	1
30.	73008003601	Spring pin 8x36 - DIN1481		1	-	1	-	1	1	1	1	1	1
30.	73005003601	Spring pin 5x36 - DIN1481		1	-	1	-	1	1	1	1	1	1
31.	79412005566	Hex bolt M12x55 - DIN933/8.8		1	-	1	-	1	1	1	1	1	1
32.	74912000066	Hex nut - plastic insert M12 - DIN985		1	-	1	-	1	1	1	1	1	1
33.	1.377.837	Shield	→2015	1	1	1	1	1	1	1	1	1	1
34.	79410002066	Hex bolt M10x20 - DIN933/8.8		24	32	32	48	48	64	24	32	36	48

Note: Item 6 and 7 are the same as item 6 and 5 pg. 11/A.
Use item 35 instead of item 5 and 33 on electric SPA machine.
Item 37 and 38: for combines without multclutch. 2016-> : only for machines with higher serial number than xxxxx16xxx

Elektromos törölécállító
Electric snapping plate adjuster.

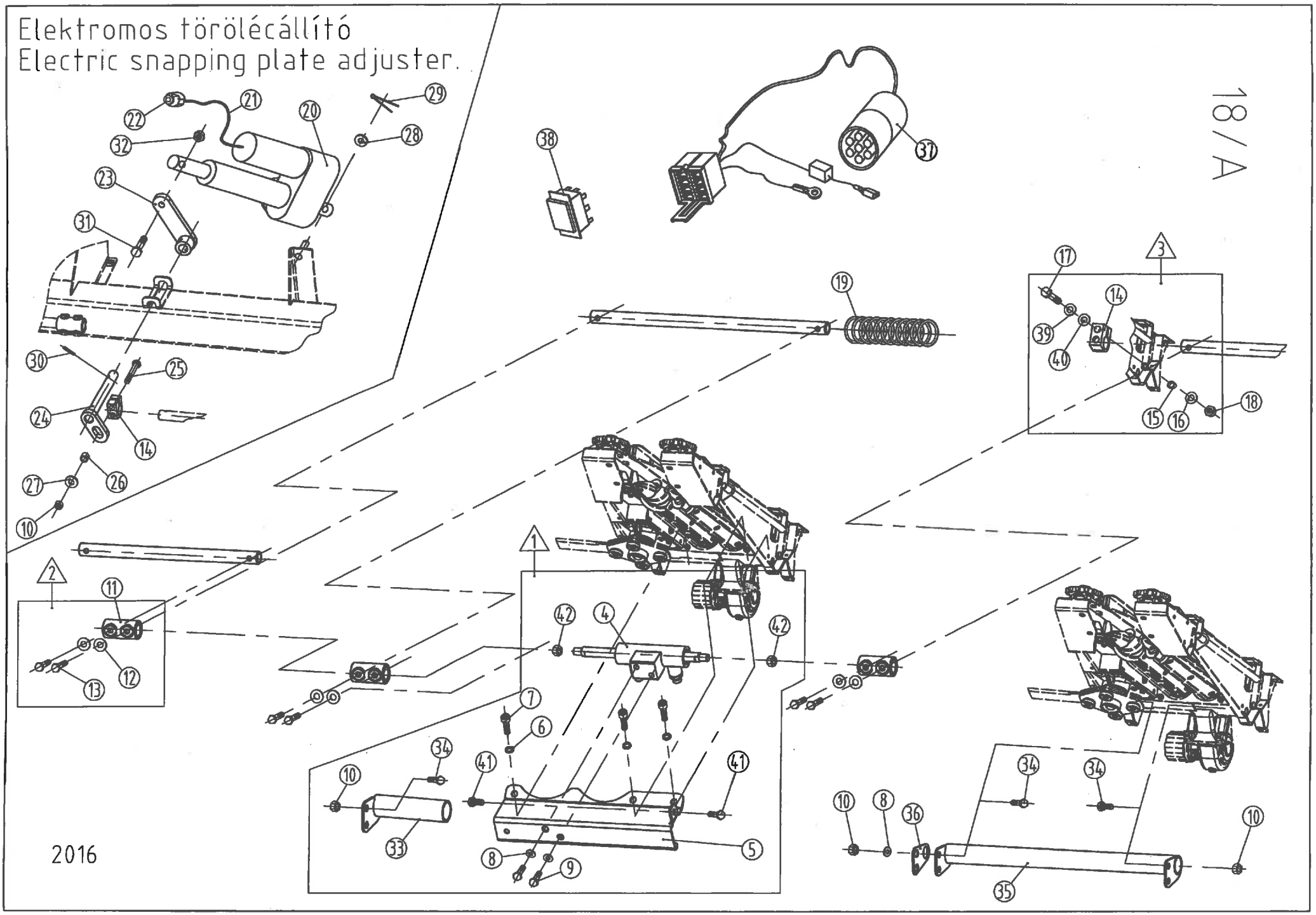

ELECTRIC & HYDRAULIC SNAPPING PLATE ADJUSTER

Ref.	Part Number	Description		6306, 6306 70	6108, 6208	6308, 6308-70	6112, 6212	6312, 6312-70	6316	6306F, 6306F 70	6308F	6309F	6312F, 6312-70F
35.	1.377.834	Shield		5	7	7	11	11	15	5	7	8	11
36.	1.377.861	Cover plate		5	7	7	11	11	15	5	7	8	11
37.	1.321.932	Harness		1	1	1	1	1	1	1	1	1	1
38.	1.310.554	Switch		1	1	1	1	1	1	1	1	1	1
39.	714C1050060	Spherical Washer M10 DIN6319/C	2015→	6	8	8	12	12	16	6	8	9	12
40.	714D1050060	Spherical Washer M10 DIN6319/D	2015→	6	8	8	12	12	16	6	8	9	12
41.	79408002066	Hex bolt M8x20 - DIN933/8.8		2	2	2	2	2	2	2	2	2	2
42.	74914000066	Hex nut - plastic insert M14 - DIN985		2	2	2	2	2	2	2	2	2	2

Note: Item 6 and 7 are the same as item 6 and 5 pg. 11/A.
Use item 35 instead of item 5 and 33 on electric SPA machine.
Item 37 and 38: for combines without multclutch. 2016-> : only for machines with higher serial number than xxxxx16xxx

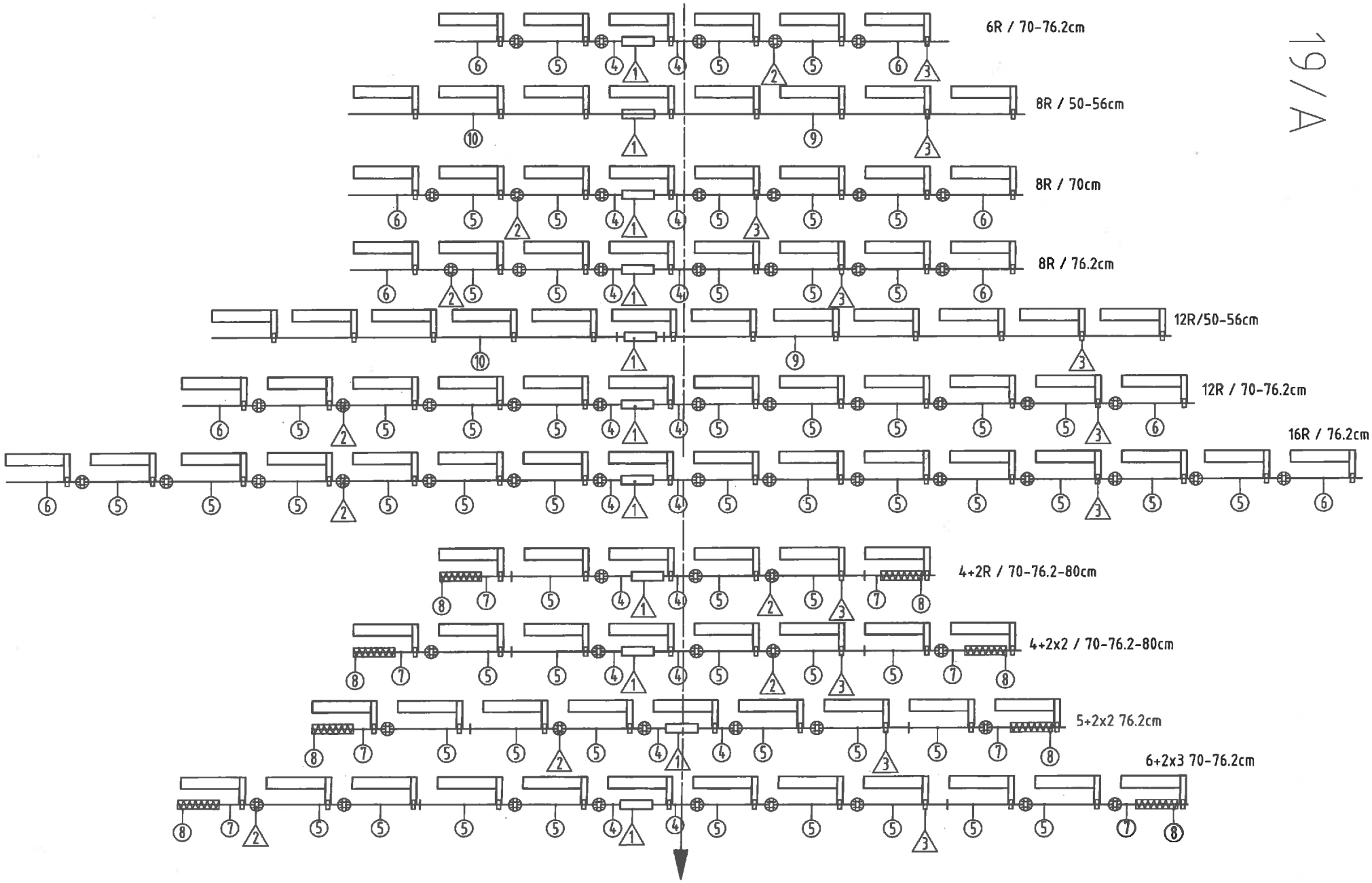
6R / 70-76.2cm
8R / 50-56cm
8R / 70cm
8R / 76.2cm
12R/50-56cm
12R / 70-76.2cm
16R / 76.2cm
4+2R / 70-76.2-80cm
4+2x2 / 70-76.2-80cm
5+2x2 76.2cm
6+2x3 70-76.2cm

19/A

2016

ELECTRIC & HYDRAULIC SNAPPING PLATE ADJUSTER

Ref.	Part Number	Description		6306 70cm	6306	6108	6208	6308 70cm	6308	6112	6212	6312 70cm	6312	6316	6306F 70cm	6306F	6308F	6309F	6312-70F	6312F
1.	-	Hydraulic cylinder and accessories (items 4-10 on pg. 18/A)		1	1	1	1	1	1	1	1	1	1	1	1	1	1	1	1	1
1.	1.379.963	Rod - In case of electric adjustment only	→2015	1	1	-	-	1	1	-	-	1	1	1	1	1	1	1	1	1
1.	1.373.927	Rod - In case of electric adjustment only	2016→	1	1	-	-	1	1	-	-	1	1	1	1	1	1	1	1	1
2.	-	Bridge-piece and hardwares (items 11-13 on pg. 18/A)		5	5	-	-	7	7	-	-	11	11	15	3	3	5	6	9	9
3.	-	Clamp and hardwares (items 14-18 on pg. 18/A)		6	6	8	8	8	8	12	12	12	12	16	6	6	8	9	12	12
4.	1.377.842	Adjusting rod (l=241)	→2015	2	-	-	-	2	-	-	-	2	-	-	2	-	-	-	-	-
4.	1.373.909	Adjusting rod left (l=209)	2016→	1	-	-	-	1	-	-	-	1	-	-	1	-	-	-	1	-
4.	1.373.910	Adjusting rod right (l=209)	2016→	1	-	-	-	1	-	-	-	1	-	-	1	-	-	-	1	-
4.	1.377.843	Adjusting rod (l=272)	→2015	-	2	-	-	-	2	-	-	-	2	2	-	2	2	2	-	2
4.	1.373.732	Adjusting rod left (l=240)	2016→	-	1	-	-	-	1	-	-	-	1	1	-	1	1	1	-	1
4.	1.373.733	Adjusting rod right (l=240)	2016→	-	1	-	-	-	1	-	-	-	1	1	-	1	1	1	-	1
4.	1.373.920	Adjuster left	2016→	-	-	1	1	-	-	1	1	-	-	-	-	-	-	-	-	-
4.	1.373.919	Adjuster right	2016→	-	-	1	1	-	-	1	1	-	-	-	-	-	-	-	-	-
5.	1.377.844	Adjusting rod (l=698)		3	-	-	-	5	-	-	-	9	-	-	3	-	-	-	9	-
5.	1.377.845	Adjusting rod (l=760)		-	3	-	-	-	5	-	-	-	9	13	-	3	5	6	-	9
6.	1.377.852	Adjusting rod (l=623)		2	-	-	-	2	-	-	-	2	-	-	-	-	-	-	-	-
6.	1.377.853	Adjusting rod (l=654)		-	2	-	-	-	2	-	-	-	2	2	-	-	-	-	-	-
7.	1.377.846	Adjusting rod (l=605)		-	-	-	-	-	-	-	-	-	-	-	2	-	-	-	2	-
7.	1.377.847	Adjusting rod (l=636)		-	-	-	-	-	-	-	-	-	-	-	-	2	2	2	-	2
8.	1.375.772	Spring		-	-	-	-	-	-	-	-	-	-	-	2	2	2	2	2	2
9.	1.379.624	Adjusting rod (l=3520)	→2015	-	-	-	-	-	-	-	1	-	-	-	-	-	-	-	-	-
9.	1.373.923	Adjusting rod (l=3485)	2016→	-	-	-	-	-	-	-	1	-	-	-	-	-	-	-	-	-
9.	1.379.668	Adjusting rod (l=3215)	→2015	-	-	-	-	-	-	1	-	-	-	-	-	-	-	-	-	-
9.	1.373.928	Adjusting rod (l=3180)	2016→	-	-	-	-	-	-	1	-	-	-	-	-	-	-	-	-	-
9.	1.373.117	Adjusting rod (l=2199)	→2015	-	-	1	-	-	-	-	-	-	-	-	-	-	-	-	-	-
9.	1.373.937	Adjusting rod (l=2164)	2016→	-	-	1	-	-	-	-	-	-	-	-	-	-	-	-	-	-
9.	1.373.084	Adjusting rod (l=2402)	→2015	-	-	-	1	-	-	-	-	-	-	-	-	-	-	-	-	-
9.	1.373.933	Adjusting rod (l=2367)	2016→	-	-	-	1	-	-	-	-	-	-	-	-	-	-	-	-	-
10.	1.379.625	Adjusting rod (l=2952)	→2015	-	-	-	-	-	-	-	1	-	-	-	-	-	-	-	-	-
10.	1.373.924	Adjusting rod (l=2917)	2016→	-	-	-	-	-	-	-	1	-	-	-	-	-	-	-	-	-
10.	1.379.669	Adjusting rod (l=2698)	→2015	-	-	-	-	-	-	1	-	-	-	-	-	-	-	-	-	-
10.	1.373.929	Adjusting rod (l=2663)	2016→	-	-	-	-	-	-	1	-	-	-	-	-	-	-	-	-	-
10.	1.373.118	Adjusting rod (l=1682)	→2015	-	-	1	-	-	-	-	-	-	-	-	-	-	-	-	-	-
10.	1.373.938	Adjusting rod (l=1647)	2016→	-	-	1	-	-	-	-	-	-	-	-	-	-	-	-	-	-
10.	1.373.085	Adjusting rod (l=1834)	→2015	-	-	-	1	-	-	-	-	-	-	-	-	-	-	-	-	-
10.	1.373.934	Adjusting rod (l=1799)	2016→	-	-	-	1	-	-	-	-	-	-	-	-	-	-	-	-	-

Note: The exploded view of items 1, 2 and 3 are shown on page 18. Item 8 is the same as item 19 page 18/A. 2016-> : only for machines with higher serial number than xxxxx16xxx

20

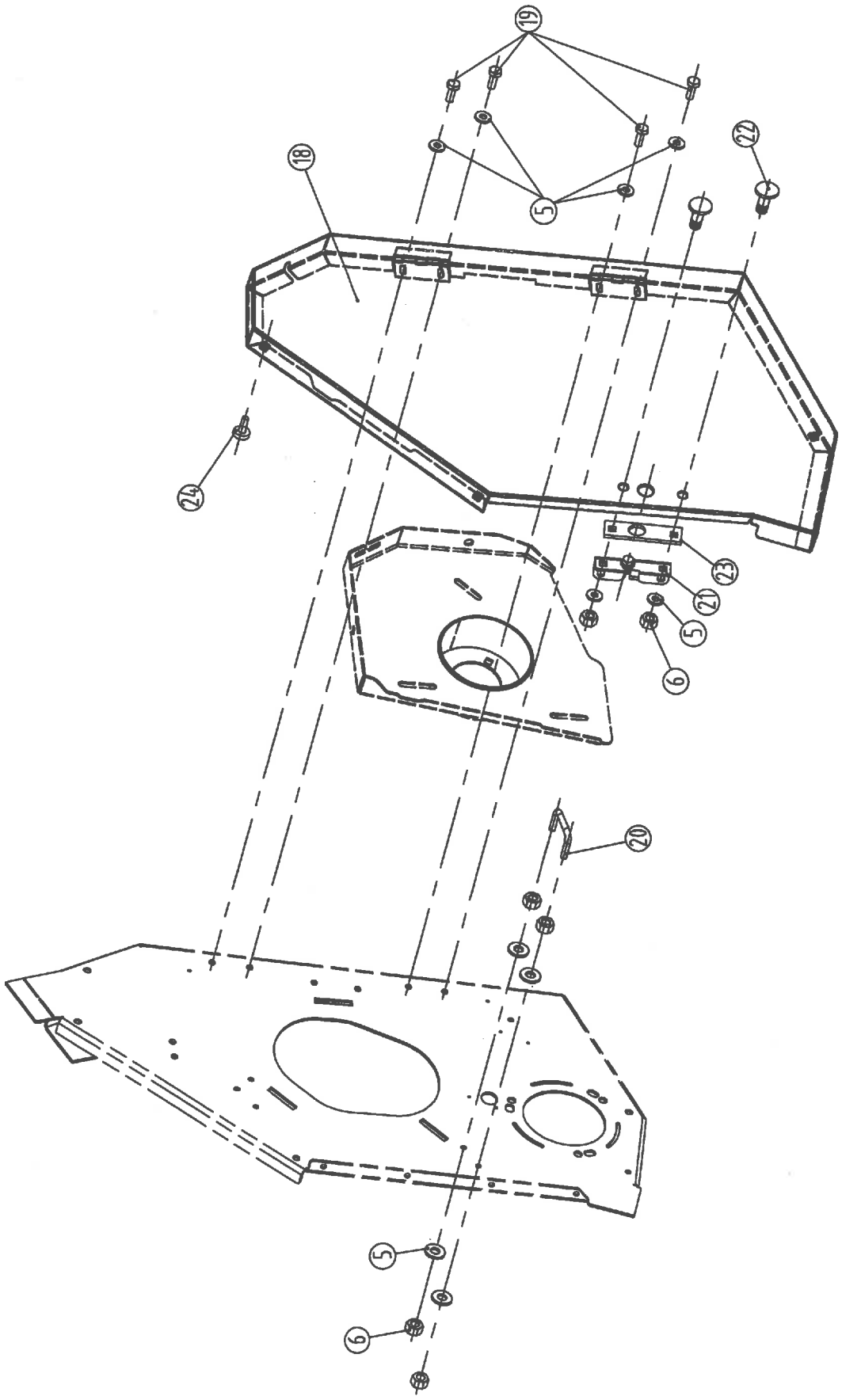

2013

SIDE-SHIELDS

Ref.	Part Number	Description		All models
5.	91623938761	Spring washer		20
6.	73508000066	Hex nut M8 - DIN934		12
18.	1.378.292	Side-shield - LH		1
18.	1.378.293	Side-shield - RH		1
19.	79408002066	Hex bolt M8x20 - DIN933/8.8		8
20.	1.378.390	Hook		2
21.	985AZ102725	Lock		2
22.	76308002066	Carriage bolt M8x20 - DIN603/8.8		4
23.	1.378.391	Spacer		2
24.	975PV615000	Rubber button		6

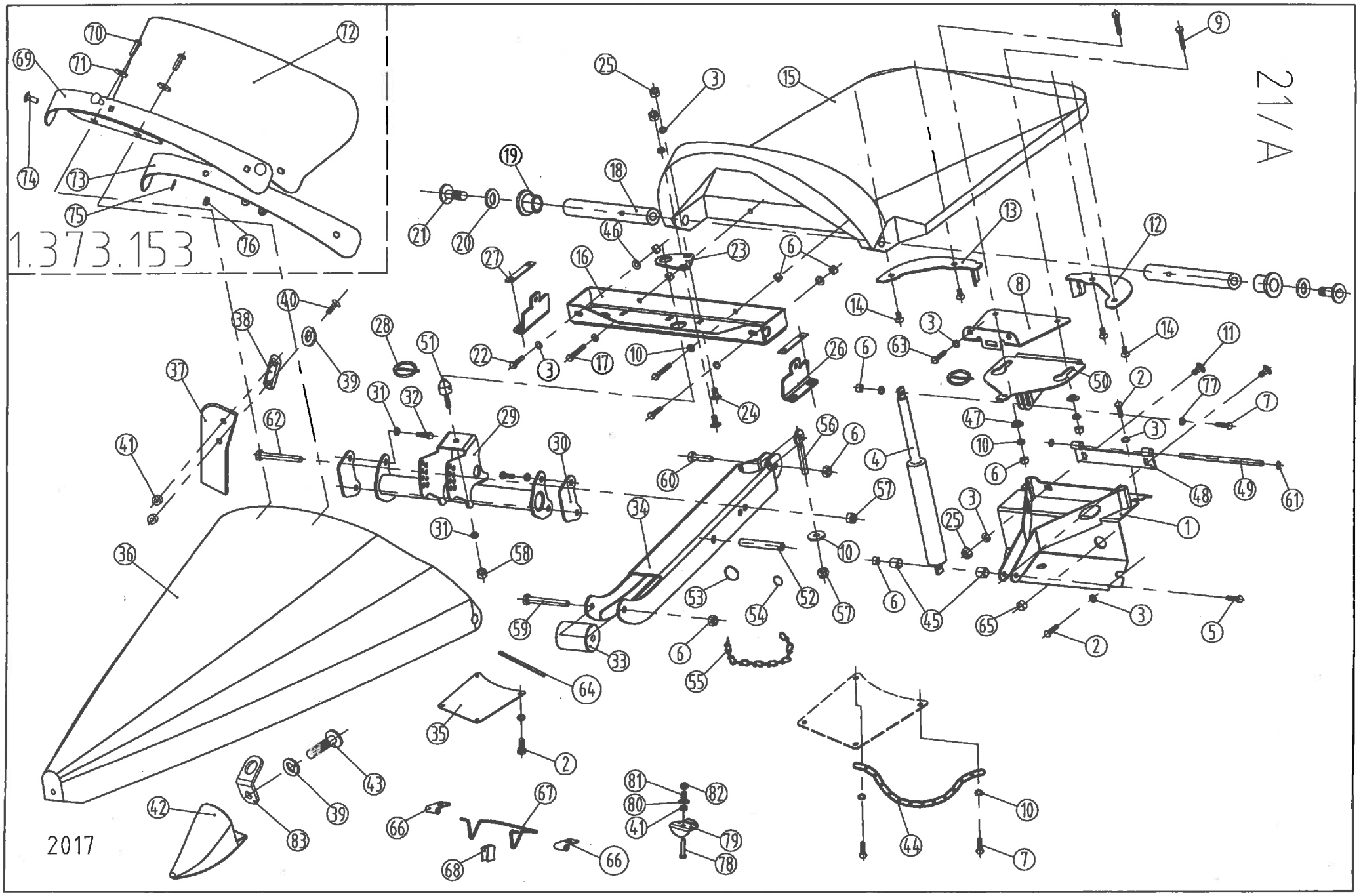
1.373.153
21/A
2017

PLASTIC CENTRAL DIVIDERS - (30"/76,2 cm 2010→), (28"/70 cm)(2011→), (32"/80 cm 2015→)

Ref.	Part Number	Description		6306	6308	6312	6316	6306F	6308F	6309F	6312F
1.	1.377.738	Bracket		5	7	11	15	3	5	6	9
1.	*1.378.576	Bracket		5	7	11	15	3	5	6	9
2.	79408002066	Hex bolt -M8x20 - DIN933/8.8		40	56	88	120	24	36	44	64
3.	91623938761	Spring washer - A8		80	112	176	240	46	80	96	144
4.	1.376.793	Gas spring		5	7	11	15	3	5	6	9
5.	79408004566	Hex bolt -M8x45 - DIN933/8.8		5	7	11	15	3	5	6	9
6.	70708000066	Lock nut - M8 - DIN980		50	70	110	150	30	50	60	90
7.	79408003566	Hex bolt M8x35 - DIN933/8.8		5	7	11	15	3	5	6	9
8.	1.377.748	Bracket		5	7	11	15	3	5	6	9
8.	*1.378.575	Bracket		5	7	11	15	3	5	6	9
9.	79308005066	Hex bolt M8x50 - DIN931/8.8		10	14	22	30	6	10	12	18
10.	1.314.099	Washer		55	77	121	165	33	55	66	99
11.	76308002066	Carriage bolt -M8x20 - DIN603/8.8		10	14	22	30	6	10	12	18
12.	1.377.465	Cleaning plate - LH		5	7	11	15	3	5	6	9
13.	1.377.466	Cleaning plate - RH		5	7	11	15	3	5	6	9
14.	80408001266	Hex socket countersunk-head bolt -M8x12		20	28	44	60	12	20	24	36
15.	1.377.533	Rear divider white		5	7	11	15	3	5	6	9
15.	1.377.533.1	Rear divider red		5	7	11	15	3	5	6	9
15.	1.377.533.2	Rear divider yellow		5	7	11	15	3	5	6	9
15.	1.377.533.3	Rear divider JD green		5	7	11	15	3	5	6	9
15.	1.377.533.4	Rear divider orange		5	7	11	15	3	5	6	9
15.	1.377.533.5	Rear divider Claas green		5	7	11	15	3	5	6	9
15.	1.377.533.6	Rear divider SDF green		5	7	11	15	3	5	6	9
15.	1.377.533.10	Rear divider chassis grey		5	7	11	15	3	5	6	9
15.	*1.376.700	Rear divider white		5	7	11	15	3	5	6	9
15.	*1.376.700.1	Rear divider red		5	7	11	15	3	5	6	9
15.	*1.376.700.2	Rear divider yellow		5	7	11	15	3	5	6	9
15.	*1.376.700.3	Rear divider JD green		5	7	11	15	3	5	6	9
15.	*1.376.700.4	Rear divider orange		5	7	11	15	3	5	6	9
15.	*1.376.700.5	Rear divider Claas green		5	7	11	15	3	5	6	9
15.	*1.376.700.6	Rear divider SDF green		5	7	11	15	3	5	6	9
16.	1.377.462	Support assy		5	7	11	15	3	5	6	9
16.	*1.378.574	Support assy		5	7	11	15	3	5	6	9
17.	79308005566	Hex bolt M8x55 - DIN931/8.8		10	14	22	30	6	10	12	18
18.	1.353.461	Shaft		10	14	22	30	6	10	12	18
19.	1.353.462	Spacer		10	14	22	30	6	10	12	18
20.	91623938961	Spring washer - A12		10	14	22	30	6	10	12	18
21.	81112003563	Hex socket button-head bolt -M12x35		10	14	22	30	6	10	12	18
22.	79308004066	Hex bolt M8x40 - DIN931/8.8		10	14	22	30	6	10	12	18
23.	1.354.571	Plate		5	7	11	15	3	5	6	9
24.	76308002066	Carriage bolt -M8x20 - DIN603/8.8		10	14	22	30	6	10	12	18
25.	73508000066	Hex nut M8 - DIN934		20	28	44	60	12	10	24	36
26.	1.377.862	Support		10	14	22	30	6	10	12	18
27.	1.376.747	Flat		10	14	22	30	6	10	12	18
28.	967PSF30526	Lynch pin DIN11023		10	14	22	30	6	10	12	18
29.	1.377.855	Bracket		5	7	11	15	3	5	6	9
29.	*1.378.582	Bracket		5	7	11	15	3	5	6	9
30.	1.375.957	Shim (1mm)		5	7	11	15	3	5	6	9
30.	1.375.958	Shim (2mm)		5	7	11	15	3	5	6	9
31.	91623938861	Spring washer - A10		25	35	55	75	15	25	30	45
32.	79410002566	Hex bolt M10x25 - DIN933/8.8		20	28	44	60	12	20	24	36
33.	1.377.902	Roll		5	7	11	15	3	5	6	9
34.	1.378.269	Arm assy		5	7	11	15	3	5	6	9
35.	1.354.667	Plate		5	7	11	15	3	5	6	9
36.	1.377.380	Central snout white		5	7	11	15	3	5	6	9
36.	1.377.380.1	Central snout red		5	7	11	15	3	5	6	9
36.	1.377.380.2	Central snout yellow		5	7	11	15	3	5	6	9
36.	1.377.380.3	Central snout JD green		5	7	11	15	3	5	6	9
36.	1.377.380.4	Central snout orange		5	7	11	15	3	5	6	9

Note: Application of shims if necessary.
Parts, marked "*" are used for 28"/70 cm row space.

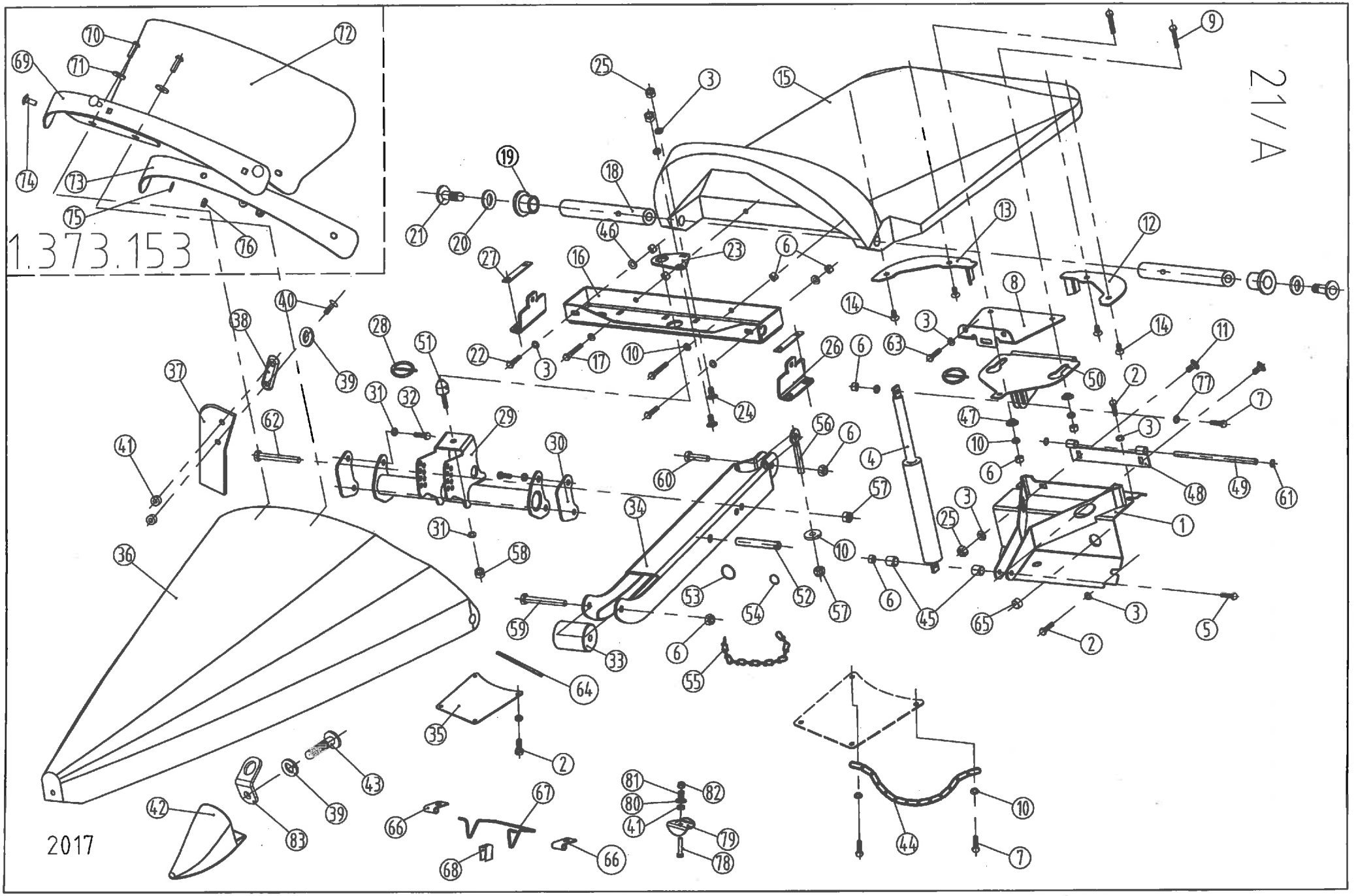
21/A
1.373.153
2017

PLASTIC CENTRAL DIVIDERS - (30"/76,2 cm 2010→), (28"/70 cm)(2011→), (32"/80 cm 2015→)

Ref.	Part Number	Description		6306	6308	6312	6316	6306F	6308F	6309F	6312F
36.	1.377.380.5	Central snout Claas green		5	7	11	15	3	5	6	9
36.	1.377.380.6	Central snout SDF green		5	7	11	15	3	5	6	9
36.	1.377.380.10	Central snout chassis grey		5	7	11	15	3	5	6	9
36.	*1.376.099	Central snout white		5	7	11	15	3	5	6	9
36.	*1.376.099.1	Central snout red		5	7	11	15	3	5	6	9
36.	*1.376.099.2	Central snout yellow		5	7	11	15	3	5	6	9
36.	*1.376.099.3	Central snout JD green		5	7	11	15	3	5	6	9
36.	*1.376.099.4	Central snout orange		5	7	11	15	3	5	6	9
36.	*1.376.099.5	Central snout Claas green		5	7	11	15	3	5	6	9
36.	*1.376.099.6	Central snout SDF green		5	7	11	15	3	5	6	9
37.	1.378.053	Rubber earsaver		10	14	22	30	6	10	12	18
38.	1.329.164	Washer		10	14	22	30	6	10	12	18
39.	72208000060	Spring washer M8 - DIN 128/A		25	35	55	75	15	25	30	45
40.	78208002063	Hex socket button-head bolt M8x20		20	28	44	60	12	20	24	36
41.	1.329.747	Spacer		25	35	55	75	15	25	30	45
42.	1.354.310	Skid shoe		5	7	11	15	3	5	6	9
43.	79308009063	Hex bolt M8x90 - DIN931/10.9		5	7	11	15	3	5	6	9
44.	1.379.914	Chain 4X32X15,2		-	-	-	-	-	2	2	4
45.	993.454.0	Bushing		10	14	22	30	6	10	12	18
46.	1.314.099	Washer		10	14	22	30	6	10	12	18
47.	1.377.751	Washer		10	14	22	30	6	10	12	18
48.	1.377.741	Hinge		5	7	11	15	3	5	6	9
48.	*1.378.577	Hinge		5	7	11	15	3	5	6	9
49.	1.377.747	Shaft		5	7	11	15	3	5	6	9
49.	*1.378.578	Shaft		5	7	11	15	3	5	6	9
50.	1.377.744	Hinge		5	7	11	15	3	5	6	9
50.	*1.378.579	Hinge		5	7	11	15	3	5	6	9
51.	1.310.009	Pin		5	7	11	15	3	5	6	9
52.	1.325.892	Pin		5	7	11	15	3	5	6	9
53.	1.325.440	Retainer ring		5	7	11	15	3	5	6	9
54.	67210000011	Ring		5	7	11	15	3	5	6	9
55.	1.379.913	Chain 2.2x31x10		5	7	11	15	3	5	6	9
56.	77208004560	Eye-bolt -M8x45 DIN44/LB		5	7	11	15	3	5	6	9
57.	74908000066	Hex nut - plastic insert M8 - DIN985		10	14	22	30	6	10	12	18
58.	70710000066	Lock nut - M10 - DIN980		5	7	11	15	3	5	6	9
59.	79408006566	Hex bolt M8x65 - DIN933/8.8		5	7	11	15	3	5	6	9
60.	79408003066	Hex bolt M8x30 - DIN933/8.8		5	7	11	15	3	5	6	9
61.	70110000001	Circlip		10	14	22	30	6	10	12	18
62.	79408008066	Hex bolt M8x80 - DIN933/8.8		10	14	22	30	6	10	12	18
63.	79408001666	Hex bolt M8x16 - DIN933/8.8		10	14	22	30	6	10	12	18
64.	96720070601	Rubber protector	2014.→	5	7	11	15	3	5	6	9
65.	96700000002	Rubber plug		5	7	11	15	3	5	6	9
66.	1.379.152	Hinge		10	14	22	30	6	10	12	18
67.	1.379.151	Spacer		5	7	11	15	3	5	6	9
68.	1.328.006	Spring clamp		5	7	11	15	3	5	6	9
	1.373.153	***Ear saver kit for 28"-30"***	2015.→	***4***	***6***	***10***	***14***	***4***	***6***	***7***	***10***
69.	1.373.148	Bracket 28"-30"		4	6	10	14	4	6	7	10
70.	81108001663	Hex socket button-head bolt- M8x16 - ISO7380/10.9		8	12	20	28	8	12	14	20
71.	91623938861	Spring washer - A10		8	12	20	28	8	12	14	20
72.	1.373.152	Rubber earsaver		4	6	10	14	4	6	7	10
73.	1.373.151	Plate		4	6	10	14	4	6	7	10
74.	76308002566	Carriage bolt M8x25 - DIN603/8.8		12	18	30	42	12	18	21	30
75.	91623938761	Spring washer - A8		12	18	30	42	12	18	21	30
76.	73508000066	Hex nut - M8 - DIN934/8		12	18	30	42	12	18	21	30
77.	71408000060	Washer M8 - DIN125 - 200HV		10	14	22	30	6	10	12	18
78.	79406003066	Hex bolt M6x30 - DIN933/8.8	2016→	5	7	11	15	3	5	6	9
79.	1.373.749	Retainer	2016→	5	7	11	15	3	5	6	9
80.	96702361800	Washer	2016→	5	7	11	15	3	5	6	9
81.	1.327.689	Spring	2016→	5	7	11	15	3	5	6	9
82.	74906000066	Hex nut - plastic insert M6 - DIN985	2016→	5	7	11	15	3	5	6	9
83.	1.372.352	Fül	2017→	5	7	11	15	3	5	6	9

Note: Application of shims if necessary.
Parts, marked "*" are used for 28"/70 cm row space.

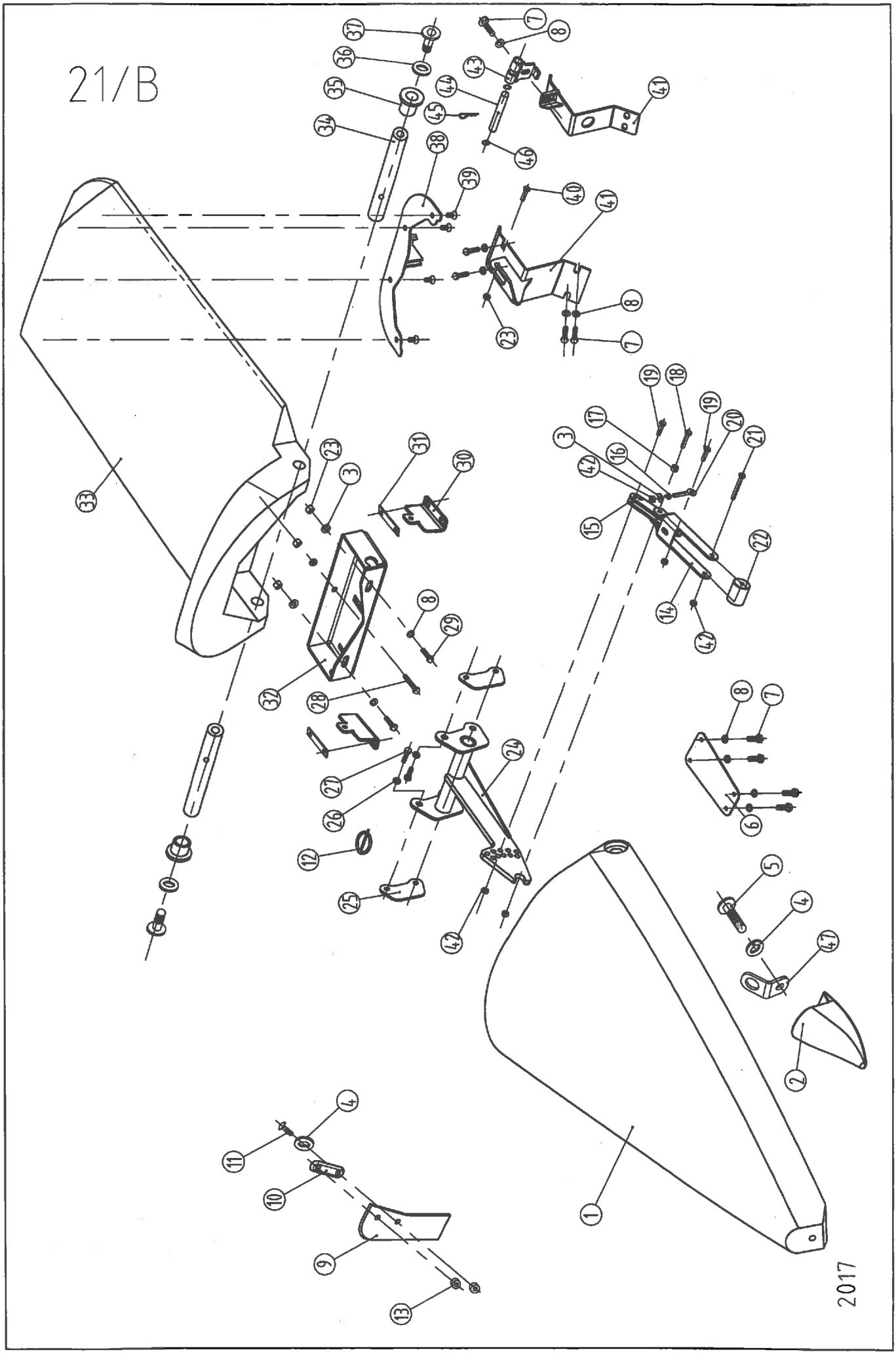
21/B
2017

PLASTIC CENTRAL DIVIDERS - (20";22" / 50;56 cm) (2014→)

Ref.	Part Number	Description		6108	6208	6112	6212
1.	1.379.502	Central snout white		-	7	-	11
1.	1.379.502.1	Central snout red		-	7	-	11
1.	1.379.502.2	Central snout yellow		-	7	-	11
1.	1.379.502.3	Central snout JD green		-	7	-	11
1.	1.379.502.4	Central snout orange		-	7	-	11
1.	1.379.502.5	Central snout Claas green		-	7	-	11
1.	1.379.502.10	Central snout chassis grey		-	7	-	11
1.	1.379.500	Central snout white		7	-	11	-
1.	1.379.500.1	Central snout red		7	-	11	-
1.	1.379.500.2	Central snout yellow		7	-	11	-
1.	1.379.500.3	Central snout JD green		7	-	11	-
1.	1.379.500.4	Central snout orange		7	-	11	-
1.	1.379.500.5	Central snout Claas green		7	-	11	-
1.	1.379.500.10	Central snout chassis grey		7	-	11	-
2.	1.354.310	Skid shoe		7	7	11	11
3.	1.314.099	Washer		21	21	33	33
4.	72208000060	Spring washer M8 - DIN 128/A		35	35	55	55
5.	79308009063	Hex bolt M8x90 - DIN931/10.9		7	7	11	11
6.	1.355.195	Plate		7	7	11	11
7.	79408002066	Hex bolt M8x20 - DIN933/8.8		42	35	66	55
8.	91623938761	Spring washer - A8		83	70	121	110
9.	1.379.499	Rubber earsaver		14	14	22	22
10.	1.329.164	Washer		14	14	22	22
11.	78208002063	Hex socket button-head bolt M8x20		28	28	44	44
12.	967PSF30526	Lynch pin DIN11023		14	14	22	22
13.	1.329.747	Spacer		28	28	44	44
14.	1.379.494	Arm assy		7	7	11	11
15.	1.379.495	Support		14	14	22	22
16.	73508000066	Hex nut - M8 - DIN934/8		7	7	11	11
17.	1.379.516	Bushing		7	7	11	11
18.	79408004066	Hex bolt M8x40 - DIN933/8.8		7	7	11	11
19.	79408003066	Hex bolt M8x30 - DIN933/8.8		14	14	22	22
20.	77208004560	Eye-bolt		7	7	11	11
21.	79308007066	Hex bolt M8x70 - DIN931/8.8		7	7	11	11
22.	1.377.902	Roll		7	7	11	11
23.	70708000066	Lock nut - M8 - DIN980		28	28	44	44
24.	1.379.701	Bracket		-	7	-	11
24.	1.379.496	Bracket		7	-	11	-
25.	1.375.957	Shim (1mm)		7	7	11	11
25.	1.375.958	Shim (2mm)		7	7	11	11
26.	91623938861	Spring washer - A10		28	28	44	44
27.	79410002566	Hex bolt - M10x25 - DIN933/8.8		28	28	44	44
28.	79308005566	Hex bolt - M8x55 - DIN931/8.8		7	7	11	11
29.	79308004066	Hex bolt - M8x40 - DIN931/8.8		14	14	22	22
30.	1.377.862	Support		14	14	22	22
31.	1.376.747	Flat		14	14	22	22
32.	1.379.490	Support assy		-	7	-	11
32.	1.379.489	Support assy		7	-	11	-
33.	1.379.503	Rear divider white		-	7	-	11
33.	1.379.503.1	Rear divider red		-	7	-	11
33.	1.379.503.2	Rear divider yellow		-	7	-	11
33.	1.379.503.3	Rear divider JD green		-	7	-	11
33.	1.379.503.4	Rear divider orange		-	7	-	11
33.	1.379.503.5	Rear divider Claas green		-	7	-	11
33.	1.379.503.10	Rear divider chassis grey		-	7	-	11
33.	1.379.501	Rear divider white		7	-	11	-
33.	1.379.501.1	Rear divider red		7	-	11	-
33.	1.379.501.2	Rear divider yellow		7	-	11	-
33.	1.379.501.3	Rear divider JD green		7	-	11	-
33.	1.379.501.4	Rear divider orange		7	-	11	-

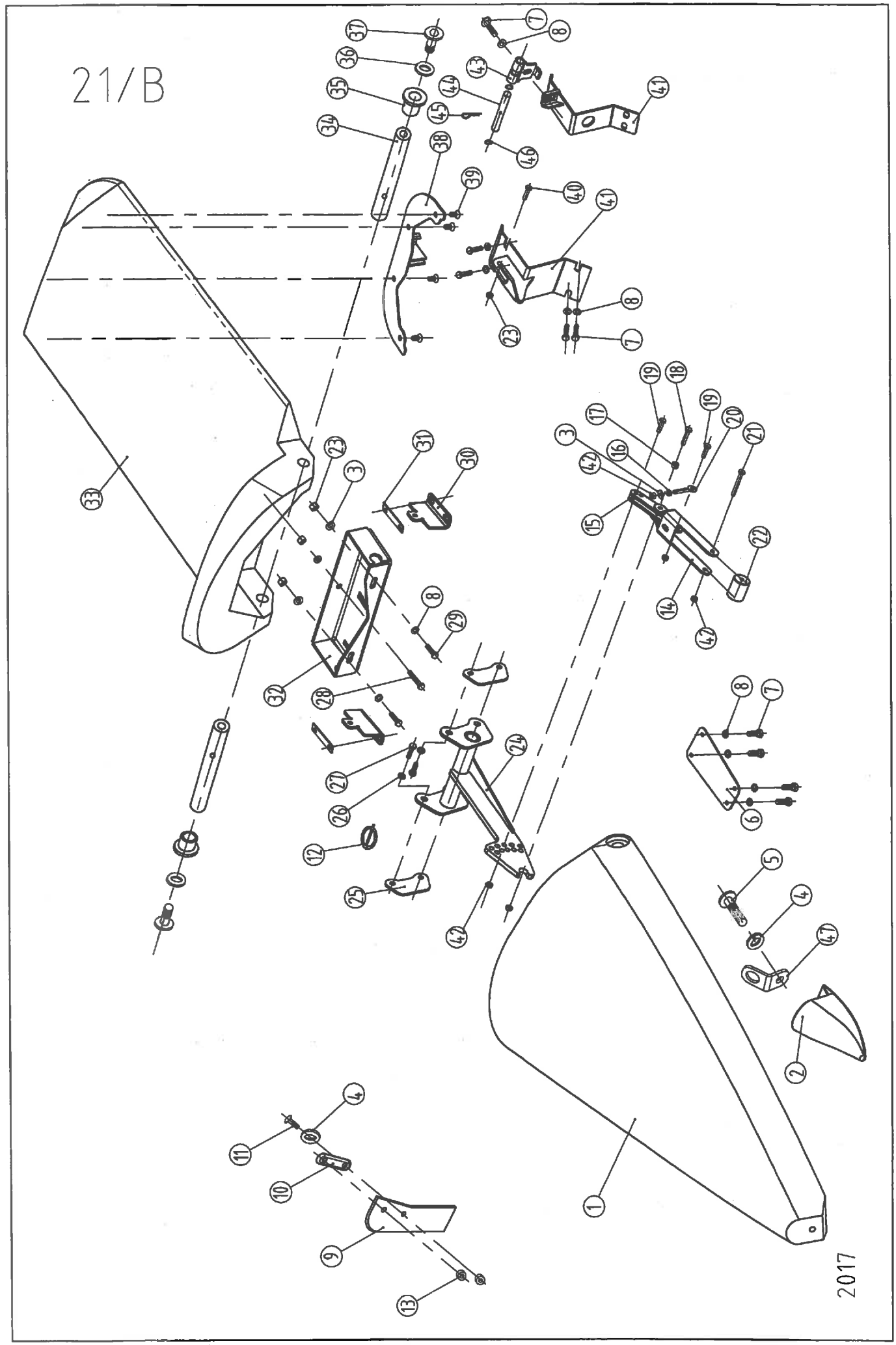
21/B
2017

PLASTIC CENTRAL DIVIDERS - (20";22" / 50;56 cm) (2014→)

Ref.	Part Number	Description		6108	6208	6112	6212
33.	1.379.501.5	Rear divider Claas green		7	-	11	-
33.	1.379.501.10	Rear divider chassis grey		7	-	11	-
34.	1.353.461	Shaft		14	14	22	22
35.	1.353.462	Spacer		14	14	22	22
36.	91623938961	Spring washer - A12		14	14	22	22
37.	81112003563	Hex socket button - head bolt M12x35 - ISO 7380/10.9		14	14	22	22
38.	1.379.704	Bracket		-	7	-	11
38.	1.379.513	Bracket		7	-	11	-
39.	80400802063	Hex socket countersunk-head bolt -M8x20 - DIN7991/8.8		28	28	44	44
40.	79408002566	Hex bolt -M8x25 - DIN933/8.8		7	7	11	11
41.	1.379.702	Bracket		-	7	-	11
41.	1.379.510	Bracket		7	-	11	-
42.	74908000066	Hex nut - plastic insert M8		35	35	55	55
43.	1.379.887	Hinge weld.		7	-	11	-
44.	1.379.889	Shaft		7	-	11	-
45.	72402001660	Cotter pin 2x16		7	-	11	-
46.	70110000001	Circlip		14	-	22	-
47.	1.372.352	Fül	2017→	7	7	11	11

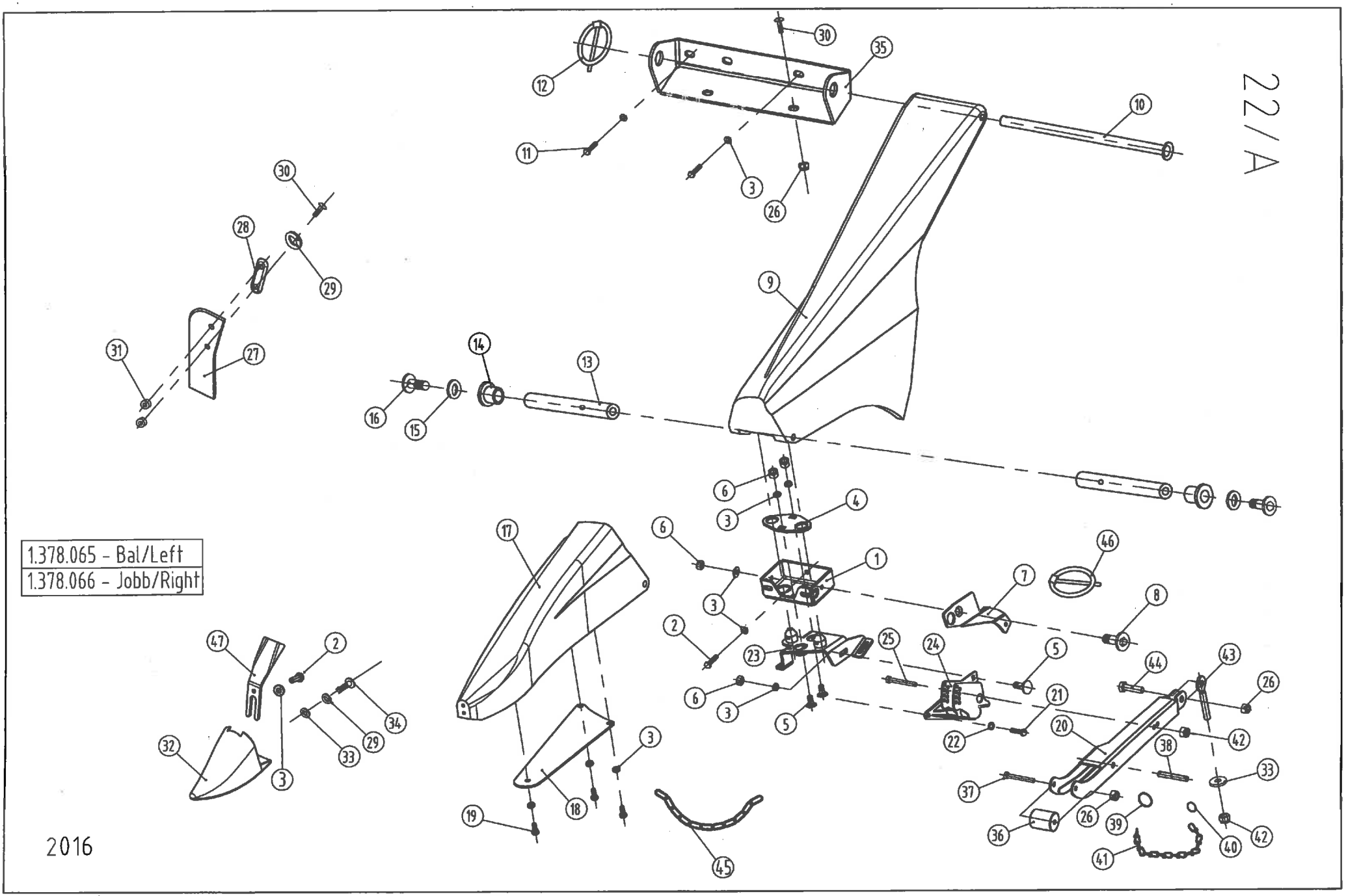
22/A
1.378.065 - Bal/Left
1.378.066 - Jobb/Right
2016

PLASTIC OUTER DIVIDERS (2010→)

Ref.	Part Number	Description		All models
1.	1.376.662	Support assy		2
2.	79408002066	Hex bolt M8x20 - DIN933/8.8		4
3.	91623938761	Spring washer A8		18
4.	1.376.663	Plate		2
5.	76308002066	Carriage bolt M8x20 - DIN603/8.8		6
6.	73508000066	Hex nut M8 - DIN934		8
7.	1.377.967	Bracket - LH	2015→	1
7.	1.377.968	Bracket - RH	2015→	1
7.	1.373.767	Bracket - LH	2016→	1
7.	1.373.768	Bracket - RH	2016→	1
8.	80400802063	Hex socket countersunk-head bolt- M8x20 - DIN7991/10.9		2
9.	1.376.095	Outer divider - LH white		1
9.	1.376.095.1	Outer divider - LH red		1
9.	1.376.095.2	Outer divider - LH yellow		1
9.	1.376.095.3	Outer divider - LH JD green		1
9.	1.376.095.4	Outer divider - LH orange		1
9.	1.376.095.5	Outer divider - LH Claas green		1
9.	1.376.095.6	Outer divider - LH SDF green		1
9.	1.376.095.7	Outer divider - LH AGCO red		1
9.	1.376.095.8	Outer divider - LH CHALLANGER yellow		1
9.	1.376.095.9	Outer divider - LH GLEANER grey		1
9.	1.376.096	Outer divider - RH white		1
9.	1.376.096.1	Outer divider - RH red		1
9.	1.376.096.2	Outer divider - RH yellow		1
9.	1.376.096.3	Outer divider - RH JD green		1
9.	1.376.096.4	Outer divider - RH orange		1
9.	1.376.096.5	Outer divider - RH Claas green		1
9.	1.376.096.6	Outer divider - RH SDF green		1
9.	1.376.096.7	Outer divider - RH AGCO red		1
9.	1.376.096.8	Outer divider - RH CHALLANGER yellow		1
9.	1.376.096.9	Outer divider - RH GLEANER grey		1
10.	1.377.087	Hollow shaft		2
11.	81108002563	Hex socket button-head bolt M8x25 ISO7380/10.9		4
12.	967PSF30526	Lynch pin 4.5 DIN11023		2
13.	1.353.461	Shaft		3
13.	1.376.677	Shaft - RH **(see note below!)**		1
14.	1.353.462	Spacer		4
15.	91623938961	Spring washer A12		4
16.	81112003563	Hex socket button-head bolt -M12x35 - ISO 7380/10.9		4
17.	1.376.093	Outer snout - LH white		1
17.	1.376.093.1	Outer snout - LH red		1
17.	1.376.093.2	Outer snout - LH yellow		1
17.	1.376.093.3	Outer snout - LH JD green		1
17.	1.376.093.4	Outer snout - LH orange		1
17.	1.376.093.5	Outer snout - LH Claas green		1
17.	1.376.093.6	Outer snout - LH SDF green		1
17.	1.376.093.10	Outer snout - LH chassis grey		1
17.	1.376.094	Outer snout - RH white		1
17.	1.376.094.1	Outer snout - RH red		1
17.	1.376.094.2	Outer snout - RH yellow		1
17.	1.376.094.3	Outer snout - RH JD green		1
17.	1.376.094.4	Outer snout - RH orange		1
17.	1.376.094.5	Outer snout - RH Claas green		1

Note: 1.376.677 item 13 only for the RH outer divider ! 1.376.721 and 1.376.722 item 35 are only for 6-row rigid models. * In case of Rotary divider

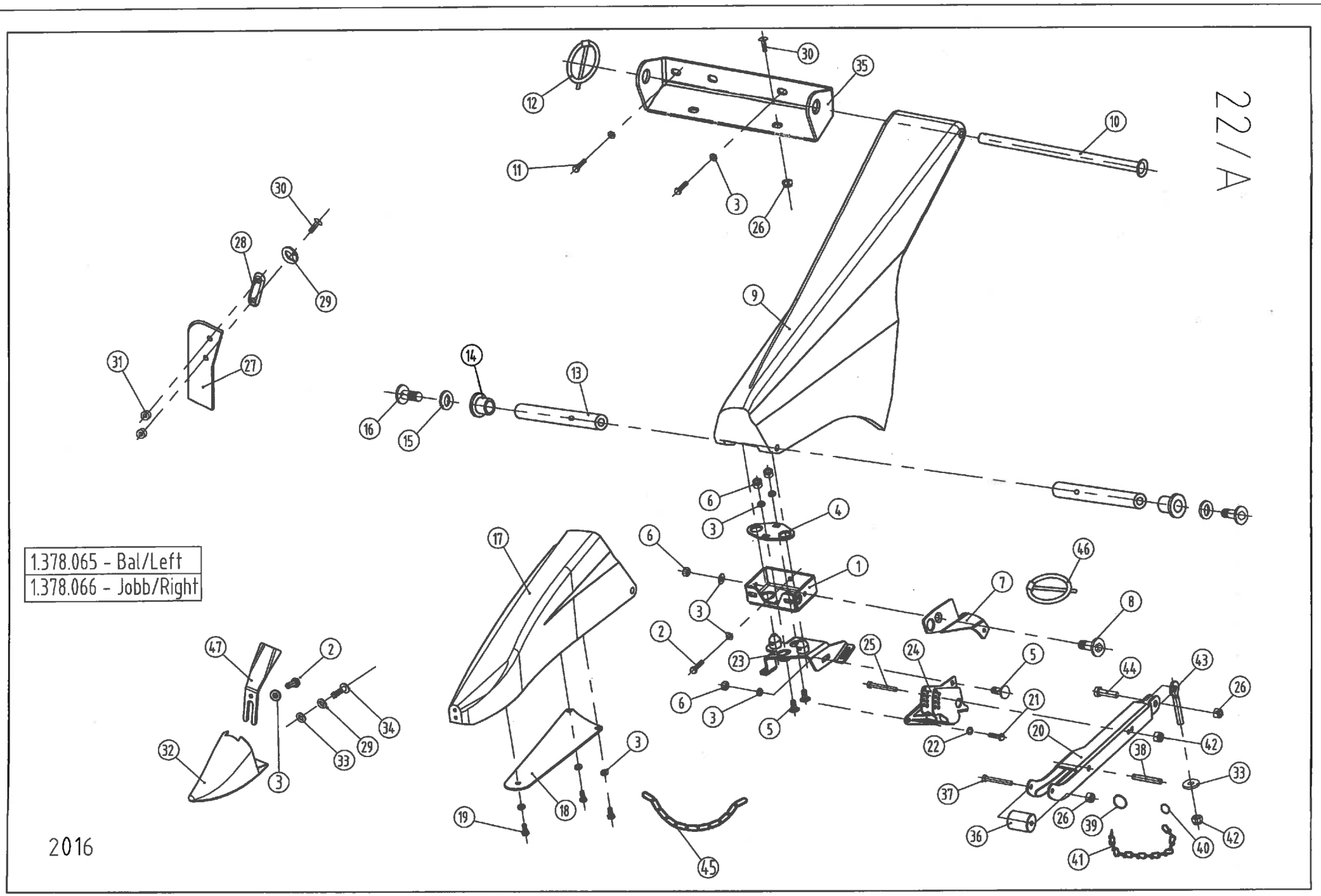
22/A
1.378.065 - Bal/Left
1.378.066 - Jobb/Right
2016

PLASTIC OUTER DIVIDERS (2010→)

Ref.	Part Number	Description		All models
17.	1.376.094.6	Outer snout - RH SDF green		1
17.	1.376.094.10	Outer snout - RH chassis grey		1
18.	1.376.676	Plate		2
19.	79408001666	Hex bolt -M8x16 - DIN933/8.8		6
20.	1.377.975	Bracket - LH		1
20.	1.377.976	Bracket - RH		1
21.	79410002566	Hex bolt -M10x25 - DIN933/8.8		6
22.	91623938861	Spring washer A10		6
23.	1.377.969	Support assy - LH	2015→	1
23.	1.377.970	Support assy - RH	2015→	1
23.	1.373.772	Support assy - LH	2016→	1
23.	1.373.773	Support assy - RH	2016→	1
24.	1.377.960	Arm assy - LH		1
24.	1.377.961	Arm assy - RH		1
25.	79408006066	Hex bolt -M8x60 - DIN933/8.8		2
26.	70708000066	Lock nut VM8 DIN980		4
27.	1.329.163	Rubber earsaver		2
28.	1.329.164	Washer		2
29.	72208000060	Spring washer -M8 - DIN 128/A		4
30.	78208002063	Hex socket button-head bolt M8x20 ISO7380/10.9		8
31.	1.329.747	Spacer		4
32.	1.354.310	Skid shoe	→2015	2
32.	1.373.997	Skid shoe	2016→	2
33.	1.314.099	Washer		12
34.	79308010063	Hex bolt -M8x100 - DIN931/10.9		2
35.	1.377.086	Console		2
35.	1.376.721	Console - LH **(see note below!)**	→2010	1
35.	1.376.722	Console - RH **(see note below!)**	→2010	1
36.	1.377.902	Roll		2
37.	79408006566	Hex bolt -M8x65 - DIN933/8.8		2
38.	1.325.892	Pin		2
39.	1.325.440	Retainer ring		2
40.	67210000011	Ring		2
41.	1.379.913	Chain 2.2x31x10		2
42.	74908000066	Hex nut - plastic insert M8 - DIN985		4
43.	77208004560	Eye-bolt -M8x45 DIN44/LB		2
44.	79408003066	Hex bolt -M8x30 - DIN933/8.8		2
45.*	1.379.914	Chain 4x32x15.2		2
46.	96716002720	Lynch pin 6x27 DIN1382	2016→	2
47.	1.373.998	Cover plate	2016→	2

Note: 1.376.677 item 13 only for the RH outer divider ! 1.376.721 and 1.376.722 item 35 are only for 6-row rigid models. * In case of Rotary divider

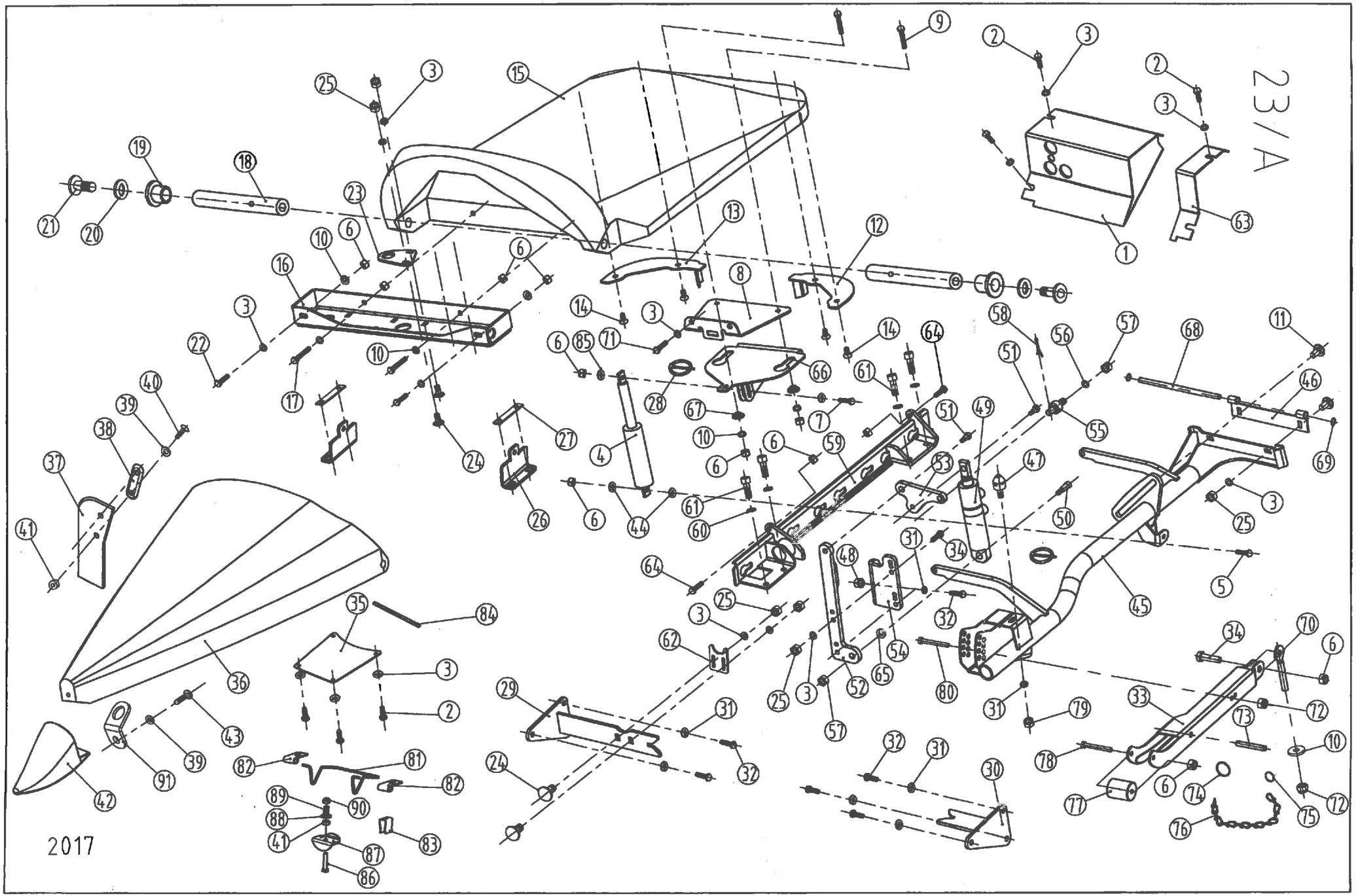
23/A
2017

PLASTIC HINGED DIVIDERS - 6300 series folding models (30") AND (28")

Ref.	Part Number	Description		6306F	6308F	6312F
1.	1.376.039	Bracket - LH	→2015	1	1	1
1.	1.376.041	Bracket - LH	2016→	1	1	1
1.	1.376.040	Bracket - RH	→2015	1	1	1
1.	1.376.042	Bracket - RH	2016→	1	1	1
1.	*1.377.199	Bracket - LH	→2015	1	2	2
1.	*1.377.201	Bracket - LH	2016→	1	2	2
1.	*1.377.200	Bracket - RH	→2015	1	2	2
1.	*1.377.202	Bracket - RH	2016→	1	2	2
2.	79408002066	Hex bolt M8x20 - DIN933/8.8		16	16	16
3.	91623938761	Spring washer - A8		40	40	40
4.	1.376.793	Gas spring		2	2	2
5.	79408004566	Hex bolt M8x45 - DIN933/8.8		2	2	2
6.	70708000066	Lock nut - DIN980 - M8		24	24	24
7.	79408003566	Hex bolt M8x35 - DIN933/8.8		2	2	2
8.	1.377.748	Bracket		2	2	2
8.	*1.378.575	Bracket		2	2	2
9.	79308005066	Hex bolt M8x50 - DIN931/8.8		4	4	4
10.	1.314.099	Washer		14	14	14
11.	76308002066	Carriage bolt M8x20 - DIN603/8.8		8	8	8
12.	1.377.465	Cleaning plate - LH		2	2	2
13.	1.377.466	Cleaning plate - RH		2	2	2
14.	80408001266	Hex socket countersunk-head bolt M8x12 - DIN7991/8.8		8	8	8
15.	1.377.534	Rear divider white		2	2	2
15.	1.377.534.1	Rear divider red		2	2	2
15.	1.377.534.2	Rear divider yellow		2	2	2
15.	1.377.534.3	Rear divider JD green		2	2	2
15.	1.377.534.4	Rear divider orange		2	2	2
15.	1.377.534.5	Rear divider Claas green		2	2	2
15.	1.377.534.6	Rear divider SDF green		2	2	2
15.	*1.379.507	Rear divider white		2	2	2
15.	*1.379.507.1	Rear divider red		2	2	2
15.	*1.379.507.2	Rear divider yellow		2	2	2
15.	*1.379.507.3	Rear divider JD green		2	2	2
15.	*1.379.507.4	Rear divider orange		2	2	2
15.	*1.379.507.5	Rear divider Claas green		2	2	2
16.	1.377.462	Support assy		2	2	2
16.	*1.378.574	Support assy		2	2	2
17.	79308005566	Hex bolt M8x55 - DIN931/8.8		4	4	4
18.	1.353.461	Shaft		4	4	4
19.	1.353.462	Spacer		4	4	4
20.	91623938961	Spring washer - A12		4	4	4
21.	81112003563	Hex socket button-head bolt M12x35 - ISO 7380/10.9		4	4	4
22.	79308004066	Hex bolt M8x40 - DIN931/8.8		4	4	4
23.	1.354.571	Plate		2	2	2
24.	76308002566	Carriage bolt M8x25 - DIN603/8.8		4	4	4
25.	73508000066	Hex nut M8 - DIN934		16	16	16
26.	1.377.862	Support		4	4	4
27.	1.376.747	Flat		4	4	4
28.	967PSF30526	Lynch pin DIN11023		4	4	4
29.	1.377.023	Support - LH		1	1	1
29.	*1.377.213	Support - LH		1	1	1

Note: Item 60 and 61 are the same as item 6 and 4 pg. 11/A.
Parts, marked "*" are used for 28"/70 cm row space.

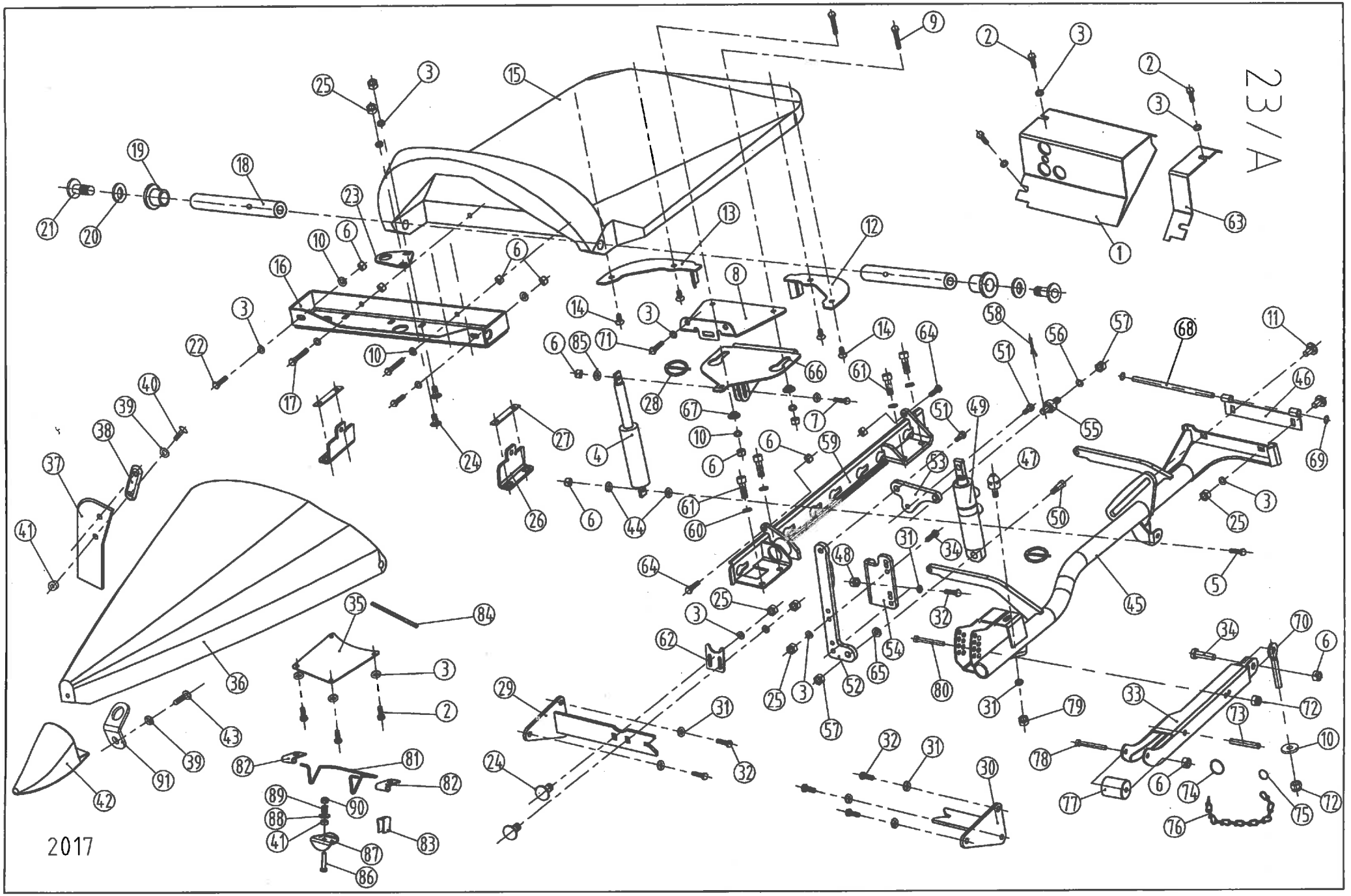
23/A
2017

PLASTIC HINGED DIVIDERS - 6300 series folding models (30") AND (28")

Ref.	Part Number	Description		6306F	6308F	6312F
29.	1.377.024	Support - RH		1	1	1
29.	*1.377.214	Support - RH		1	1	1
30.	1.377.025	Support - LH		1	1	1
30.	*1.377.215	Support - LH		1	1	1
30.	1.377.026	Support - RH		1	1	1
30.	*1.377.216	Support - RH		1	1	1
31.	91623938861	Spring washer - A10		19	19	19
32.	79410002566	Hex bolt M10x25 - DIN933/8.8		17	17	17
33.	1.377.975	Arm assy LH - to the RH of header		1	1	1
33.	1.377.976	Arm assy RH - to the LH of header		1	1	1
34.	79408003066	Hex bolt M8x30 - DIN933/8.8		6	6	6
35.	1.354.667	Plate		2	2	2
36.	1.377.380	Central snout white		2	2	2
36.	1.377.380.1	Central snout red		2	2	2
36.	1.377.380.2	Central snout yellow		2	2	2
36.	1.377.380.3	Central snout JD green		2	2	2
36.	1.377.380.4	Central snout orange		2	2	2
36.	1.377.380.5	Central snout Claas green		2	2	2
36.	1.377.380.6	Central snout SDF green		2	2	2
36.	*1.376.099	Central snout white		2	2	2
36.	*1.376.099.1	Central snout red		2	2	2
36.	*1.376.099.2	Central snout yellow		2	2	2
36.	*1.376.099.3	Central snout JD green		2	2	2
36.	*1.376.099.4	Central snout orange		2	2	2
36.	*1.376.099.5	Central snout Claas green		2	2	2
36.	*1.376.099.6	Central snout SDF green		2	2	2
37.	1.378.053	Rubber earsaver		4	4	4
38.	1.329.164	Shim		4	4	4
39.	72208000060	Spring washer M8 - DIN 128/A		10	10	10
40.	78208002063	Hex socket button-head bolt M8x20 - ISO7380/10.9		8	8	8
41.	1.329.747	Spacer		9	9	9
42.	1.354.310	Skid shoe		2	2	2
43.	79308009063	Hex bolt M8x90 - DIN931/10.9		2	2	2
44.	993.454.0	Bushing		4	4	4
45.	1.378.048	Hinged frame - LH		1	1	1
45.	*1.373.336	Hinged frame - LH		1	1	1
45.	1.378.049	Hinged frame - RH		1	1	1
45.	*1.373.337	Hinged frame - RH		1	1	1
46.	1.377.741	Hinge		2	2	2
47.	1.310.009	Support pin		2	2	2
48.	73510000066	Hex nut M10 - DIN934		2	2	2
49.	1.354.397	Hydraulic cylinder		2	2	2
50.	1.354.382	Bolt - M12		2	2	2
51.	1.354.381	Bolt - M10		4	4	4
52.	1.377.018	Console - LH		1	1	1
52.	1.377.013	Console - RH		1	1	1
53.	1.377.019	Arm		2	2	2
54.	1.377.020	Console - LH		1	1	1
54.	1.377.015	Console - RH		1	1	1
55.	1.329.744	Tapped shaft		2	2	2
56.	71412000060	Washer M12 - DIN125 - 200HV		2	2	2
57.	70712000066	Lock nut - DIN980 - M12		4	4	4

Note: Item 60 and 61 are the same as item 6 and 4 pg. 11/A.
Parts, marked "*" are used for 28"/70 cm row space.

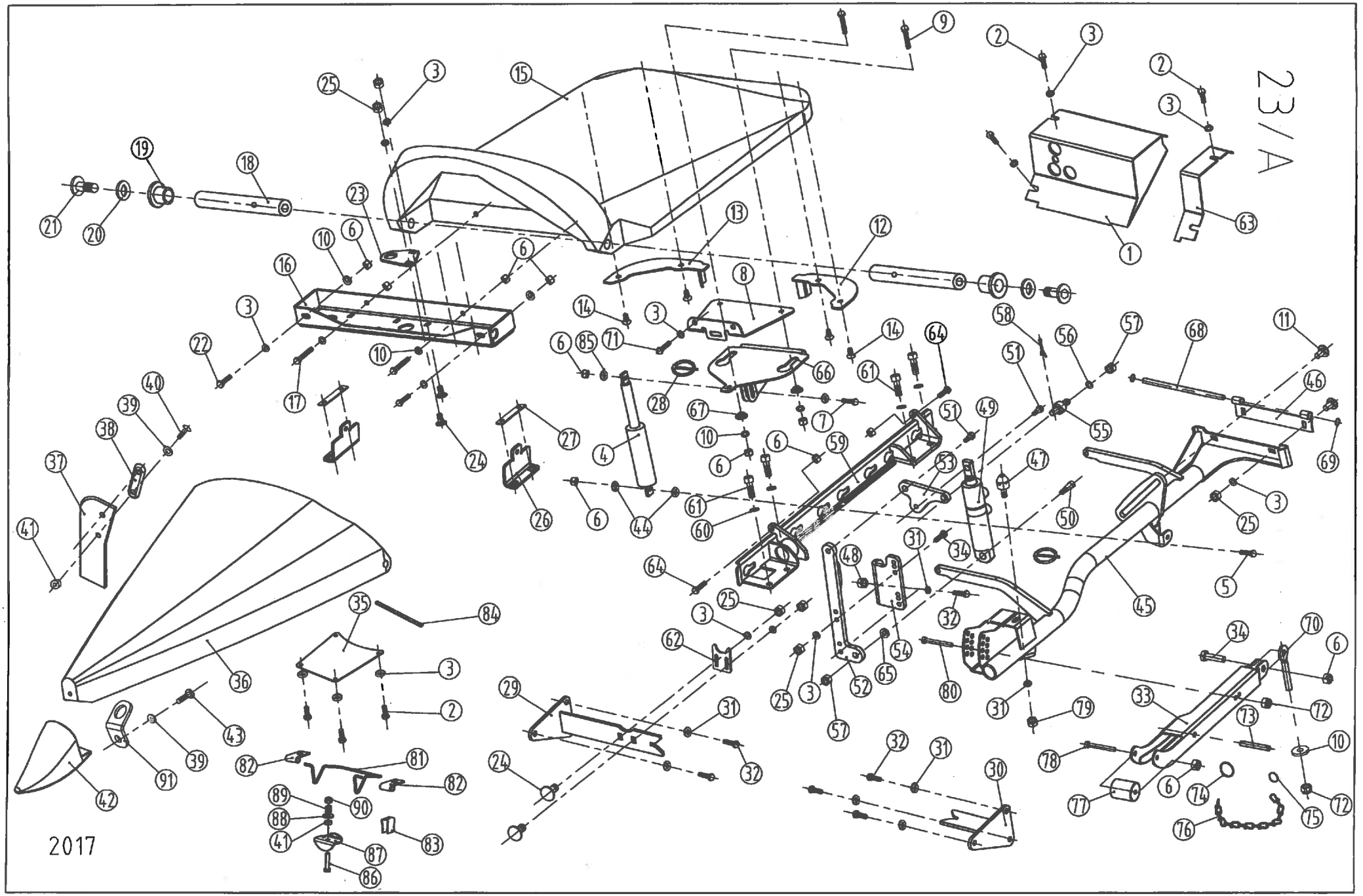
23/A
2017

PLASTIC HINGED DIVIDERS - 6300 series folding models (30") AND (28")

Ref.	Part Number	Description		6306F	6308F	6312F
58.	72402502560	Split pin 2.5x25 - DIN94		2	2	2
59.	1.378.056	Chain guide - LH		1	1	1
59.	1.378.057	Chain guide - RH		1	1	1
60.	71810000060	Spring washer M10 - DIN7980		8	8	8
61.	80210003063	Hex socket head cap bolt M10x30 - DIN912/10.9		8	8	8
62.	1.377.022	Plate		2	2	2
63.	1.376.043	Cover plate - LH		1	1	1
63.	1.376.044	Cover plate - RH		1	1	1
64.	79408003063	Hex bolt M8x30 - DIN933/10.9		4	4	4
65.	1.329.746	Spacer		2	2	2
66.	1.377.744	Hinge		2	2	2
66.	*1.373.339	Hinge - LH		1	1	1
66.	*1.373.341	Hinge - RH		1	1	1
67.	1.377.751	Washer		4	4	4
68.	1.377.747	Shaft		2	2	2
69.	70110000001	Circlip		4	4	4
70.	77208004560	Eye-bolt -M8x45 DIN44/LB		2	2	2
71.	79408001666	Hex bolt M8x16 - DIN933/8.8		4	4	4
72.	74908000066	Hex nut - plastic insert M8 - DIN985		4	4	4
73.	1.325.892	Pin		2	2	2
74.	1.325.440	Retainer ring		2	2	2
75.	67210000011	Ring		2	2	2
76.	1.379.914	4x32x15,2 Band chain		-	2	4
77.	1.377.902	Roll		2	2	2
78.	79408006566	Hex bolt M8x65 - DIN933/8.8		2	2	2
79.	70710000066	Lock nut - M10 - DIN980		2	2	2
80.	79408006066	Hex bolt M8x60 - DIN933/8.8		2	2	2
81.	1.379.151	Spacing		1	1	1
82.	1.379.152	Plate		2	2	2
83.	1.328.006	Spriing clamp	→2015	1	1	1
84.	96720070601	Rubber protector		2	2	2
85.	71408000060	Washer M8 - DIN125 - 200HV		4	4	4
86.	79406003066	Hex bolt M6x30 - DIN933/8.8	2016→	1	1	1
87.	1.373.749	Retainer	2016→	1	1	1
88.	96702361800	Washer	2016→	1	1	1
89.	1.327.689	Spring	2016→	1	1	1
90.	74906000066	Hex nut - plastic insert M6 - DIN985	2016→	1	1	1
91.	1.372.352	Loop	2017→	2	2	2

Note: Item 60 and 61 are the same as item 6 and 4 pg. 11/A.
Parts, marked "*" are used for 28"/70 cm row space.

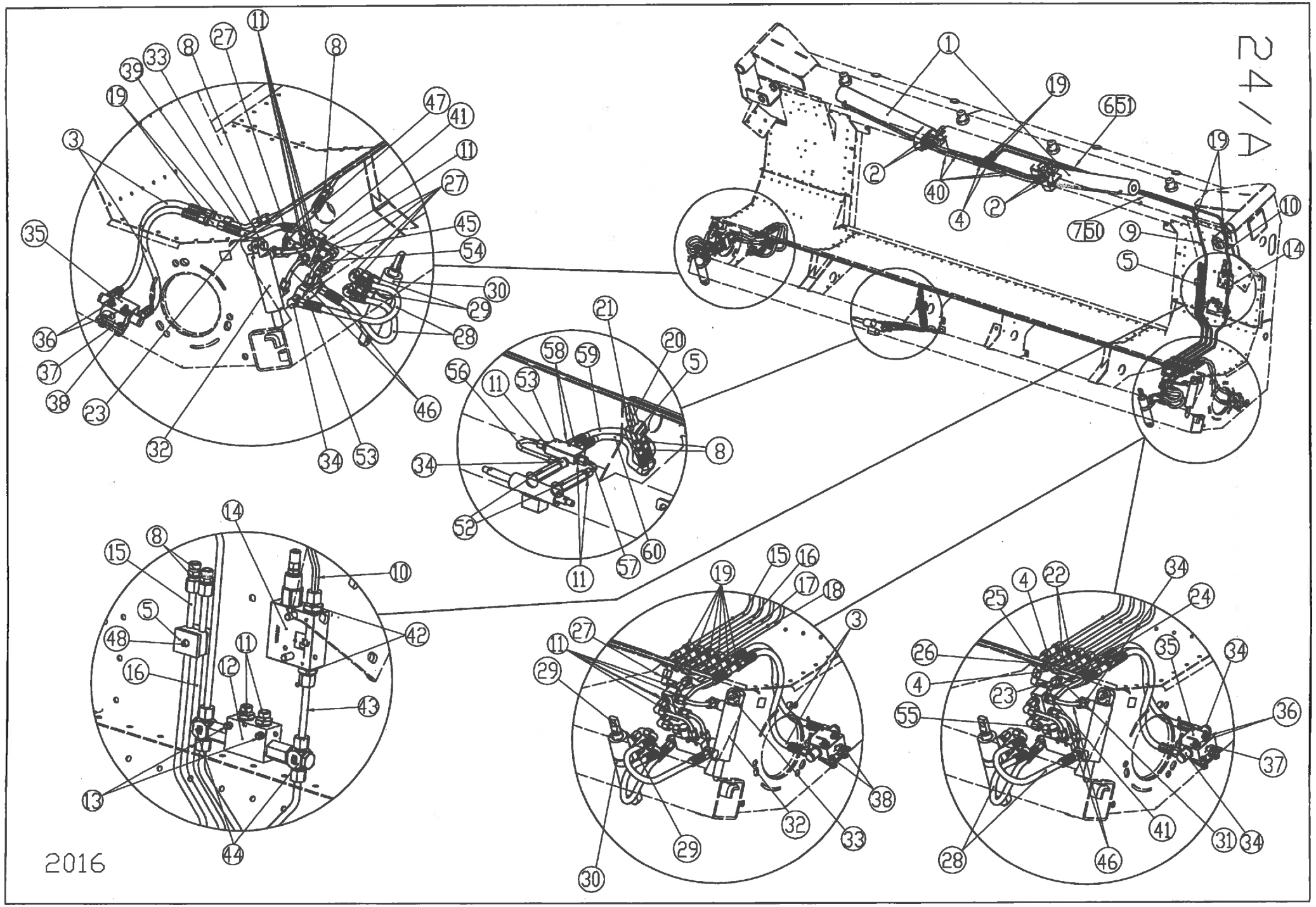
24/D
2016

24/A

HYDRAULIC FOLDABLE

Ref.	Part Number	Description		6306F	6308F	6309F	6312F
1.	1.376.278	Hydraulic cylinder		2	-	-	-
1.	1.375.144	Hydraulic cylinder		-	2	2	-
1.	1.378.415	Hydraulic cylinder		-	-	-	2
2.	1.310.514	Fitting (1 mm hole)		4	4	4	4
2.*	1.355.481	Fitting (0,7 mm hole)		4	4	4	4
3.	1.376.796	Hydraulic hose 1SNDN6-400		4	4	4	-
3.	1.352.896	Hydraulic hose 1SNDN6-450		-	-	-	4
4.	1.354.511	T-form - T8PL		2	2	2	2
5.	1.377.061	Clamp		2	2	2	2
6.	1.378.373	Hydraulic tube		1	1	-	-
6.	1.378.379	Hydraulic tube L=74		-	-	1	1
6.	1.378.376	Hydraulic tube L=1840		-	-	-	1
6.	1.378.380	Hydraulic tube L=1078		-	-	1	-
7.	1.378.372	Hydraulic tube		1	1	-	-
7.	1.378.379	Hydraulic tube L=74		-	-	1	1
7.	1.378.376	Hydraulic tube L=1840		-	-	-	1
7.	1.378.380	Hydraulic tube L=1078		-	-	1	-
8.	1.377.062	Fitting - M14X1.5		6	6	6	6
9.	1.378.845	Hydraulic tube		1	1	1	1
10.	1.378.846	Hydraulic tube		1	1	1	1
11.	1.375.669	Fitting - GE8PLR-ED	→2015	16	16	16	16
11.	1.375.669	Fitting - GE8PLR-ED	2016→	19	19	19	19
12.	1.378.837	Dual controlled check valve FDP 1/4		1	1	1	1
13.	79406004066	Hex bolt M6x40		2	2	2	2
	74906000066	Hex nut - plastic insert M6 - DIN985		2	2	2	2
14.	96703800001	Pressure limit valve C. VS2 3/8"		1	1	1	1
15.	1.377.065	Hydraulic tube		1	1	1	-
15.	1.378.638	Hydraulic tube		-	-	-	1
16.	1.377.066	Hydraulic tube		1	1	1	-
16.	1.378.637	Hydraulic tube		-	-	-	1
17.	1.378.842	Hydraulic tube		1	1	1	-
17.	1.378.854	Hydraulic tube		-	-	-	1
18.	1.377.843	Hydraulic tube		1	1	1	-
18.	1.378.857	Hydraulic tube		-	-	-	1
19.	1.308.783	Fitting - bulkhead HYP 160-8-575 SV8		12	12	12	12
20.	1.377.072	Hydraulic tube L=1501,5		1	1	1	1
21.	1.377.073	Hydraulic tube L=1531,5		1	1	1	1
22.	1.377.074	Hydraulic tube		2	2	2	2
23.	1.378.619	Hydraulic hose 1SNDN6-262		2	2	2	-
23.	1.378.639	Hydraulic hose 1SNDN6-320		-	-	-	2
24.	1.378.614	Hydraulic tube		1	1	-	-
24.	1.378.647	Hydraulic tube		-	-	1	-
24.	1.378.648	Hydraulic tube		-	-	-	1
25.	1.378.615	Hydraulic tube		1	1	-	-
25.	1.378.643	Hydraulic tube		-	-	1	-
25.	1.378.644	Hydraulic tube		-	-	-	1
26.	1.378.616	Hydraulic tube		1	1	-	-
26.	1.378.641	Hydraulic tube		-	-	1	-
26.	1.378.642	Hydraulic tube		-	-	-	1
27.	1.314.510	Fitting - 90deg. EVW 8 PL		10	10	10	10
28.	1.377.089	Hydraulic hose 1SNDN6-355	→2013	4	4	4	4
28.	1.379.477	Hydraulic hose 1SNDN6-410	2014→	4	4	4	4
29.	1.309.601	Fitting - GE-8-PSM-ED		4	4	4	4
29.*	1.310.514	Fitting		4	4	4	4
30.	1.354.397	Hydraulic cylinder		2	2	2	2

Nota: * Loose parts

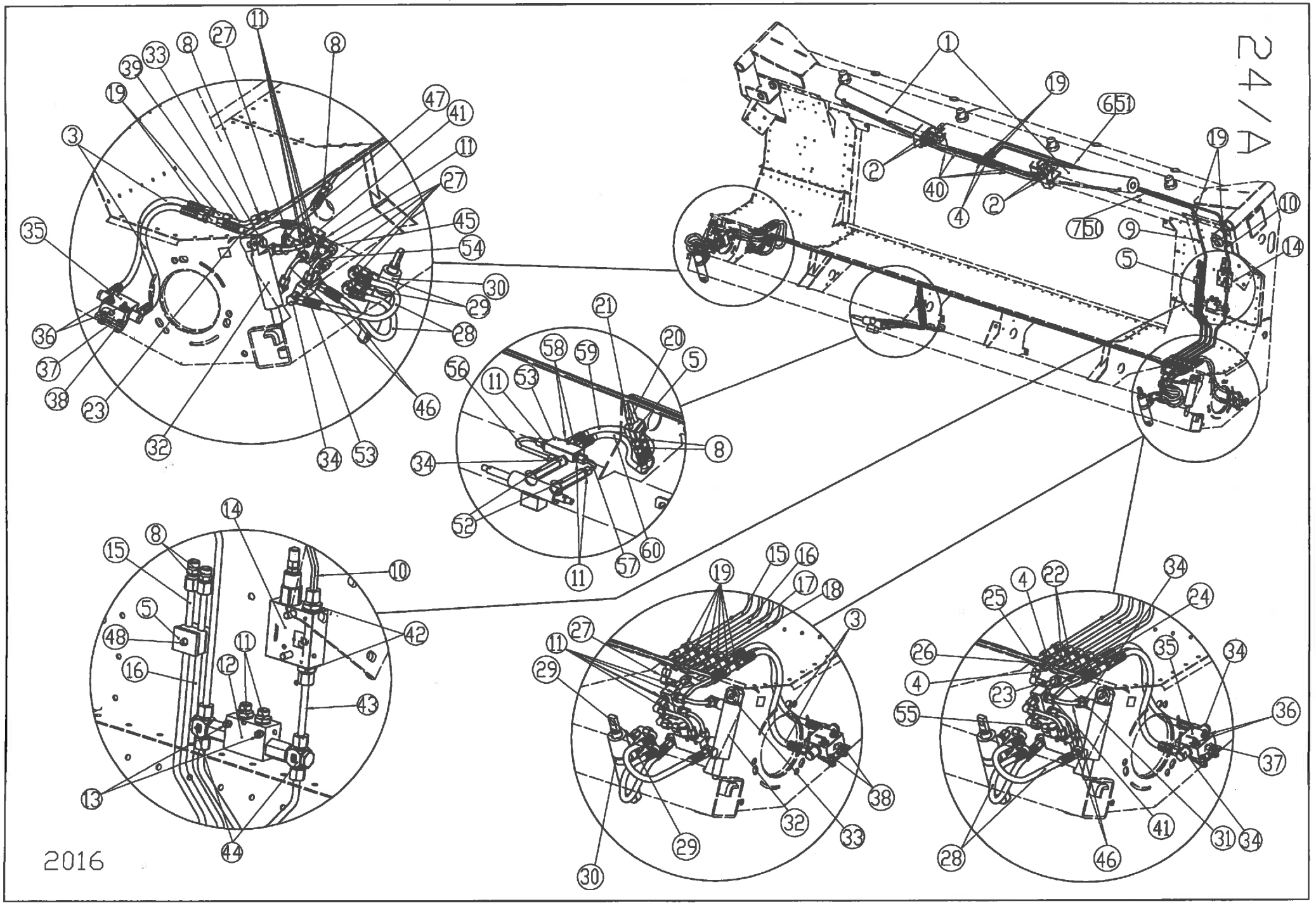
24/A
2016

HYDRAULIC FOLDABLE

Ref.	Part Number	Description		6306F	6308F	6309F	6312F
31.	1.378.613	Hydraulic tube		1	1	-	-
31.	1.378.645	Hydraulic tube		-	-	1	-
31.	1.378.646	Hydraulic tube		-	-	-	1
32.	1.356.118	Hydraulic cylinder		2	2	2	2
33.	1.377.593	Bolt		2	2	2	2
34.	1.314.509	Fitting - SVWE8PL	→2015	14	14	14	14
34.	1.314.509	Fitting - SVWE8PL	2016→	15	15	15	15
35.	1.378.526	Endswitch VFCA - 1401		2	2	2	2
36.	79406005066	Hex bolt M6x50		4	4	4	4
	96702361800	Washer		4	4	4	4
	74900600066	Hex nut - plastic insert M6		4	4	4	4
37.	1.378.530	Plate		2	2	2	2
38.	79408002066	Hex bolt M8x20		4	4	4	4
	74900800066	Hex nut - plastic insert M8		4	4	4	4
39.	1.377.076	Hydraulic tube		1	1	1	1
40.	1.330.772	Hydraulic hose 1SNDN6-375		4	4	4	4
41.	1.378.522	Divider		2	2	2	2
42.	1.353.318	Fitting - M14X1.5 /G3/8		2	2	2	2
43.	1.378.844	Hydraulic tube		1	1	-	-
44.	1.378.836	T-form - TH-8-PLR		2	2	2	2
45.	80208001666	Hex socket head cap bolt M8x16 DIN912/8.8		2	2	2	2
	71808000060	Spring washer M8 DIN7980		2	2	2	2
46.	1.378.612	Hydraulic tube		4	4	4	4
47.	1.330.757	Hydraulic hose 1SNDN6-200		1	1	1	1
48.	79406004566	Hex bolt M6x45		2	2	2	2
49.	1.376.795	Hydraulic hose 1SNDN6-290		1	1	1	1
50.	1.378.381	Hydraulic tube L=655		-	-	1	-
50.	1.378.377	Hydraulic tube L=294		-	-	-	1
51.	1.378.382	Hydraulic tube L=832		-	-	1	-
51.	1.378.378	Hydraulic tube L=471		-	-	-	1
52.	1.378.696	Fitting - GE8PLR-ED		2	2	2	2
53.	1.379.458	Dual controlled check valve FPDLE 1/4 GS	→2015	2	2	2	2
53.	1.379.458	Dual controlled check valve FPDLE 1/4 GS	2016→	3	3	3	3
54.	1.379.457	Hydraulic tube		2	2	2	2
55.	1.379.456	Hydraulic tube L=45		2	2	2	2
56.	1.373.449	Hydraulic tube	2016→	1	1	1	1
57.	1.373.991	Hydraulic tube	2016→	1	1	1	1
58.	1.379.776	Orifice DIA 0,5		2	2	2	2
59.	1.373.488	Hydraulic hose 1SNDN6-535	2016→	1	1	1	1
60.	1.373.585	Hydraulic hose 1SNDN6-470	2016→	1	1	1	1

Note: * Loose parts

24/A1

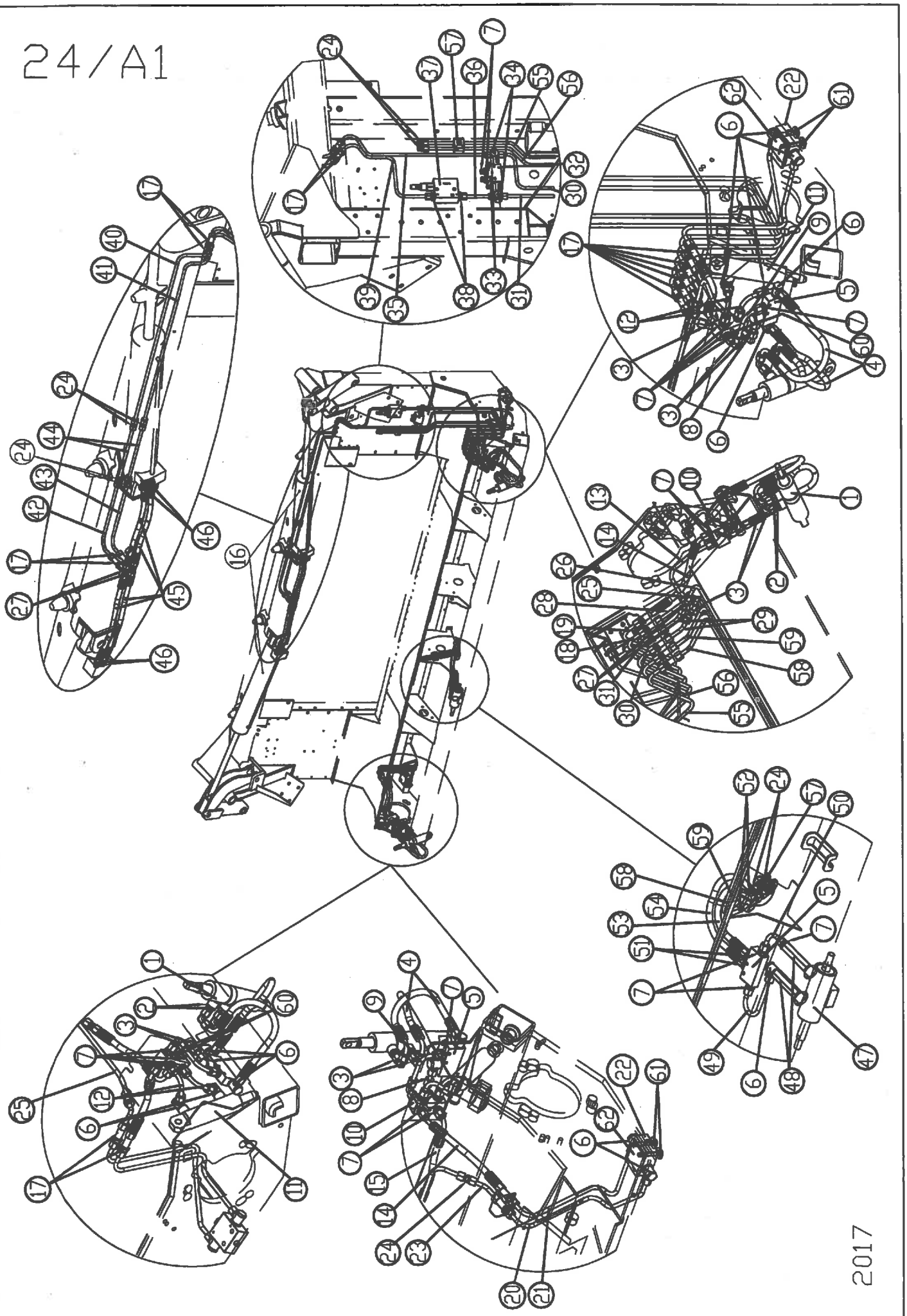

2017

24/A1

HYDRAULIC FOLDABLE

Ref.	Part Number	Description		6306F	6308F
1.	1.354.397	Hydraulic cylinder		2	2
2.	1.309.601	Fitting - GE-8-PSM-ED		4	4
2.*	1.310.514	Fitting - 1 mm hole		4	4
3.	1.314.510	Fitting - 90deg. EVW 8 PL		10	10
4.	1.379.477	Hydraulic hose - 1SNDN6-410		4	4
5.	1.379.458	Dual controlled check valve - FPDLE 1/4 GS		3	3
6.	1.314.509	Fitting - SVWE 8 PL		15	15
7.	1.375.669	Fitting - GE8PLR-ED		21	21
8.	1.379.456	Hydraulic tube - (L=45)		2	2
9.	1.379.457	Hydraulic tube		2	2
10.	1.378.522	Divider		2	2
11.	1.356.118	Hydraulic cylinder		2	2
12.	1.378.612	Hydraulic tube		4	4
13.	1.378.613	Hydraulic tube		1	1
14.	1.378.619	Hydraulic hose - 1SNDN6-262		2	2
15.	1.330.757	Hydraulic hose - 1SNDN6-200		1	1
16.	1.376.278	Hydraulic cylinder		2	-
16.	1.375.144	Hydraulic cylinder		-	2
17.	1.308.783	Fitting - bulkhead - HYP 160-8-575 SV8		12	12
18.	1.373.577	Hydraulic tube		1	1
19.	1.373.313	Hydraulic tube		1	1
20.	1.373.315	Hydraulic tube		1	1
21.	1.373.314	Hydraulic tube		1	1
22.	1.378.526	Endswitch - VFCA - 1401		2	2
23.	1.377.076	Hydraulic tube		1	1
24.	1.377.062	Fitting - M14X1.5		9	9
25.	1.375.615	Hydraulic tube		1	1
26.	1.378.616	Hydraulic tube		1	1
27.	1.354.511	T-form - T8PL		4	4
28.	1.378.614	Hydraulic tube		1	1
29.	1.377.074	Hydraulic tube		2	2
30.	1.373.775	Hydraulic tube		1	1
31.	1.373.774	Hydraulic tube		1	1
32.	1.378.837	Dual controlled check valve - FDP 1/4		1	1
33.	79406004066	Hex bolt - M6X40		2	2
	74906000066	Hex nut - plastic insert - M6 - DIN982		2	2
34.	1.378.836	T-form - TH-8-PLR		2	2
35.	1.373.583	Hydraulic tube		1	1
36.	1.378.844	Hydraulic tube		1	1
37.	96703800001	Pressure limit valve - C. VS2 3/8"		1	1
38.	1.353.318	Fitting - M14X1.5 G3/8		2	2
39.	1.373.584	Hydraulic tube		1	1
40.	1.373.328	Hydraulic tube		1	1
41.	1.373.330	Hydraulic tube		1	1
42.	1.373.329	Hydraulic tube		1	1
43.	1.373.331	Hydraulic tube		1	1
44.	1.372.268	Hydraulic tube		2	2
45.	1.330.772	Hydraulic hose - 1SNDN6-375		4	4
46.	1.310.514	Fitting - 1 mm hole		4	4
46.*	1.355.481	Fitting - 0,7 mm hole		4	4

Note: * Loose parts

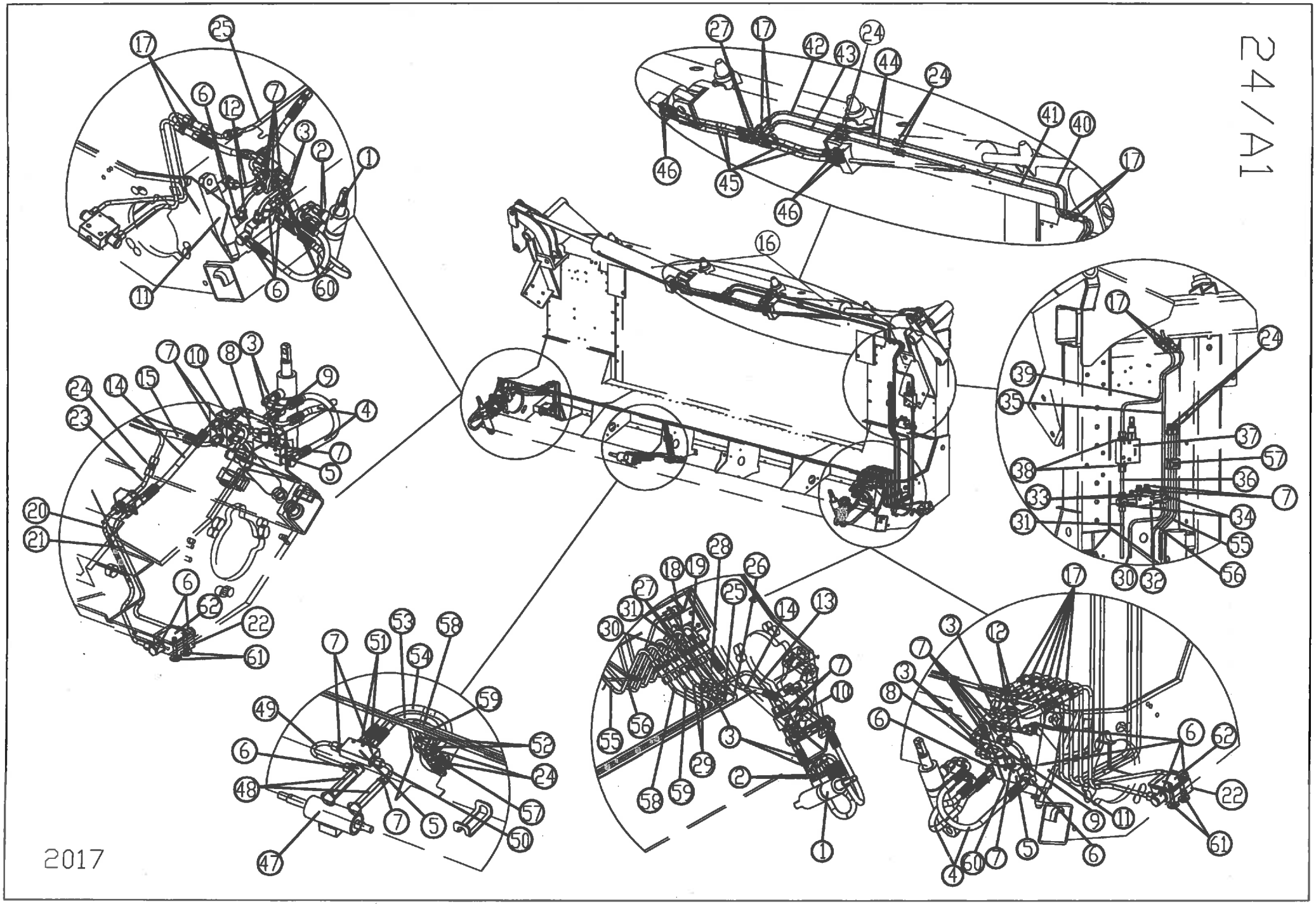
17
25
6
12
7
3
2
1
11
6
60
27
17
42
43
24
44
24
41
40
17
46
45
46
16
17
24
39
35
37
57
38
36
33
7
34
31
55
30
32
56
7
10
8
3
9
4
24
14
15
23
7
5
20
21
6
62
22
61
7
51
53
54
58
59
49
52
6
24
48
57
7
5
50
47
28
18
19
26
27
31
25
14
13
30
7
10
55
56
3
29
2
58
59
1
17
3
12
7
3
8
6
6
62
22
9
11
61
4
60
7
5
6
2017

24/A1

HYDRAULIC FOLDABLE

Ref.	Part Number	Description		6306F	6308F
47.	1.373.725	Hydraulic cylinder		1	1
48.	1.378.696	Fitting - GE8PLR-ED		2	2
49.	1.373.449	Hydraulic tube		1	1
50.	1.373.991	Hydraulic tube		1	1
51.	1.379.776	Orifice DIA 0,5		2	2
52.	79406005066	Hex bolt - M6X50 - DIN933		2	2
	74906000066	Hex nut - plastic insert - M6 - DIN982		2	2
53.	1.373.585	Hydraulic hose - 1SNDN6-470		1	1
54.	1.373.488	Hydraulic hose - 1SNDN6-535		1	1
55.	1.373.777	Hydraulic tube		1	1
56.	1.373.776	Hydraulic tube		1	1
57.	1.377.061	Clamp		2	2
58.	1.377.072	Hydraulic tube - (L=1501,5)		1	1
59.	1.377.073	Hydraulic tube - (L=1531,5)		1	1
60.	80208001666	Hex socket head cap bolt - M8X16 - DIN912/8.8		2	2
	71808000060	Spring washer - M8 - DIN7980		2	2
61.	79408005066	Hex bolt - M8X50 - DIN933/8.8		4	4
	96702378160	Washer - M8 - DIN9021		4	4
62.	1.373.327	Washer		2	2

Note: * Loose parts

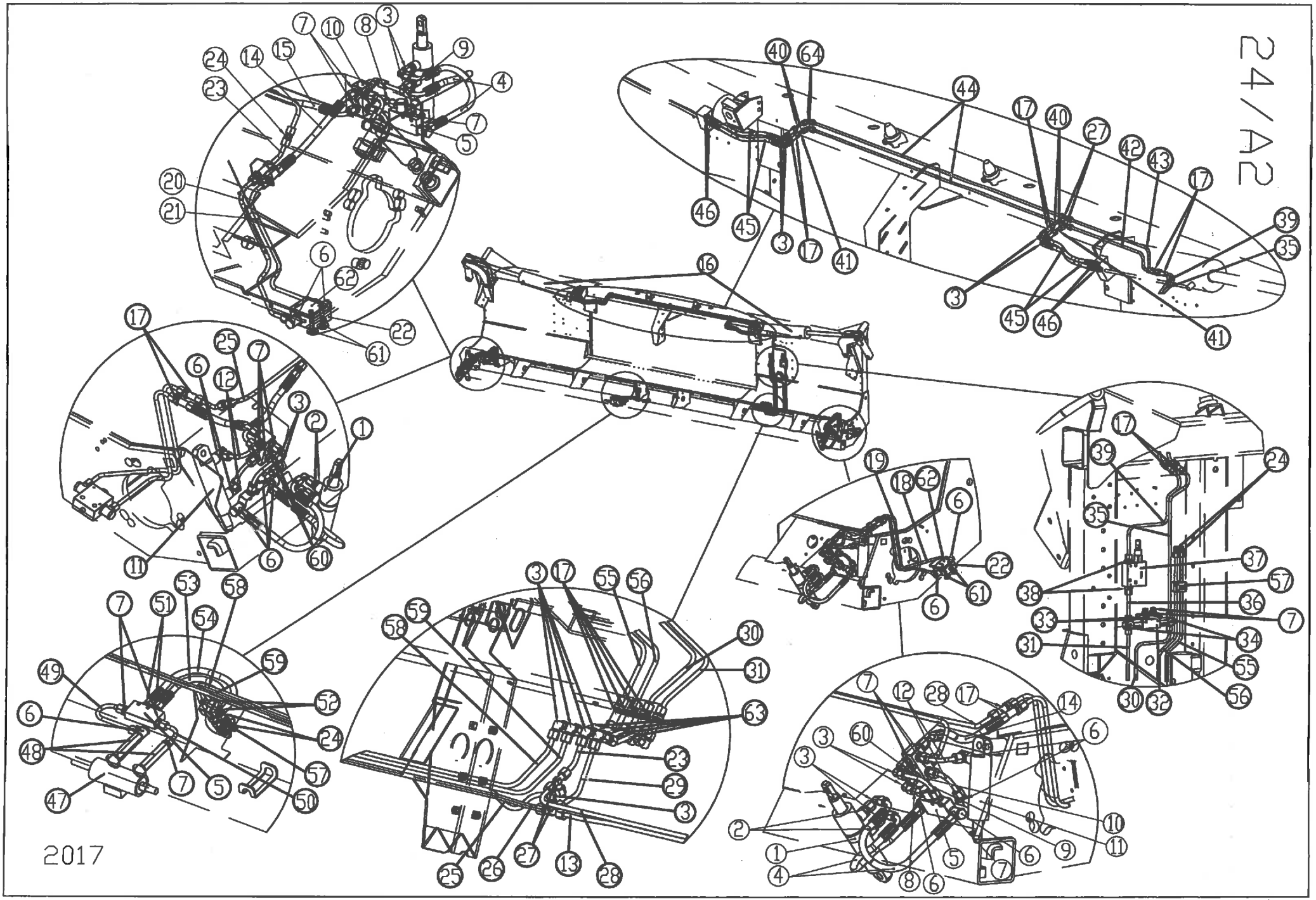
24/A2
2017

24/A2

HYDRAULIC FOLDABLE

Ref.	Part Number	Description		6312-70F	6312F
1.	1.354.397	Hydraulic cylinder		2	2
2.	1.309.601	Fitting - GE-8-PSM-ED		4	4
2.*	1.310.514	Fitting - 1 mm hole		4	4
3.	1.314.510	Fitting - 90deg. EVW 8 PL		18	18
4.	1.379.477	Hydraulic hose - 1SNDN6-410		4	4
5.	1.379.458	Dual controlled check valve - FPDLE 1/4 GS		3	3
6.	1.314.509	Fitting - SVWE 8 PL		15	15
7.	1.375.669	Fitting - GE8PLR-ED		21	21
8.	1.379.456	Hydraulic tube - (L=45)		2	2
9.	1.379.457	Hydraulic tube		2	2
10.	1.378.522	Divider		2	2
11.	1.356.118	Hydraulic cylinder		2	2
12.	1.378.612	Hydraulic tube		4	4
13.	1.373.901	Hydraulic tube		1	1
14.	1.378.639	Hydraulic hose - 1SNDN6-320		2	2
15.	1.330.757	Hydraulic hose - 1SNDN6-200		1	1
16.	1.378.415	Hydraulic cylinder		2	2
17.	1.308.783	Fitting - bulkhead - HYP 160-8-575 SV8		16	16
18.	1.373.577	Hydraulic tube		1	1
19.	1.373.313	Hydraulic tube		1	1
20.	1.373.315	Hydraulic tube		1	1
21.	1.373.314	Hydraulic tube		1	1
22.	1.378.526	Endswitch - VFCA - 1401		2	2
23.	1.377.076	Hydraulic tube		2	1
24.	1.377.062	Fitting - M14X1.5		8	8
25.	1.373.917	Hydraulic tube		-	1
25.	1.373.903	Hydraulic tube		1	-
26.	1.373.900	Hydraulic tube		1	1
27.	1.354.511	T-form - T8PL		2	2
28.	1.373.902	Hydraulic tube		1	1
29.	1.373.899	Hydraulic tube		1	1
30.	1.373.908	Hydraulic tube		1	1
31.	1.373.907	Hydraulic tube		1	1
32.	1.378.837	Dual controlled check valve - FDP 1/4		1	1
33.	79406004066	Hex bolt - M6X40		2	2
	74906000066	Hex nut - plastic insert - M6 - DIN982		2	2
34.	1.378.836	T-form - TH-8-PLR		2	2
35.	1.373.583	Hydraulic tube		1	1
36.	1.378.844	Hydraulic tube		1	1
37.	96703800001	Pressure limit valve - C. VS2 3/8"		1	1
38.	1.353.318	Fitting - M14X1.5 G3/8		2	2
39.	1.373.584	Hydraulic tube		1	1
40.	1.373.970	Hydraulic tube		4	2
41.	1.373.971	Hydraulic tube		-	2
42.	1.373.974	Hydraulic tube		1	1
43.	1.373.973	Hydraulic tube		1	1
44.	1.373.975	Hydraulic tube		2	2
45.	1.330.772	Hydraulic hose - 1SNDN6-375		4	4
46.	1.310.514	Fitting - 1 mm hole		4	4
46.*	1.355.481	Fitting - 0,7 mm hole		4	4

Note: * Loose parts

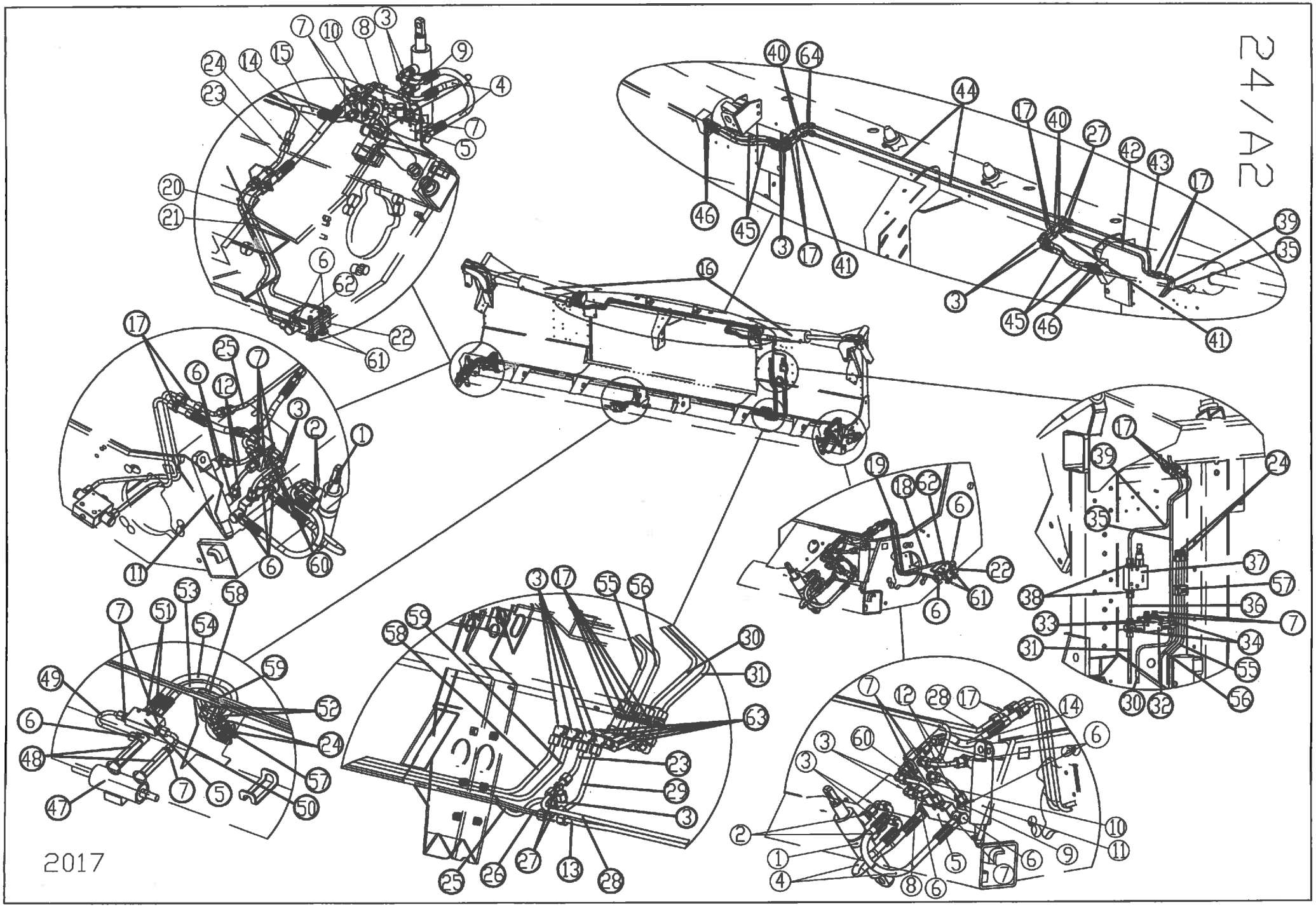
24/A2
2017

24/A2

HYDRAULIC FOLDABLE

Ref.	Part Number	Description		6312-70F	6312F
47.	1.373.725	Hydraulic cylinder		1	1
48.	1.378.696	Fitting - GE8PLR-ED		2	2
49.	1.373.449	Hydraulic tube		1	1
50.	1.373.991	Hydraulic tube		1	1
51.	1.379.776	Orifice DIA 0,5		2	2
52.	79406005066	Hex bolt - M6X50 - DIN933		2	2
	74906000066	Hex nut - plastic insert - M6 - DIN982		2	2
53.	1.373.585	Hydraulic hose - 1SNDN6-470		1	1
54.	1.373.488	Hydraulic hose - 1SNDN6-535		1	1
55.	1.379.065	Hydraulic tube - (L=609,7)		1	1
56.	1.379.066	Hydraulic tube - (L=610,7)		1	1
57.	1.377.061	Clamp		2	2
58.	1.377.072	Hydraulic tube - (L=1501,5)		-	1
58.	1.373.304	Hydraulic tube		1	-
59.	1.377.073	Hydraulic tube - (L=1531,5)		-	1
59.	1.373.305	Hydraulic tube		1	-
60.	80208001666	Hex socket head cap bolt - M8X16 - DIN912/8.8		2	2
	71808000060	Spring washer - M8 - DIN7980		2	2
61.	79408005066	Hex bolt - M8X50 - DIN933/8.8		4	4
	96702378160	Washer - M8 - DIN9021		4	4
62.	1.373.327	Washer		2	2
63.	1.379.067	Hydraulic tube		2	2
64.	1.377.021	Fitting - M14x1.5		2	2

Note: * Loose parts

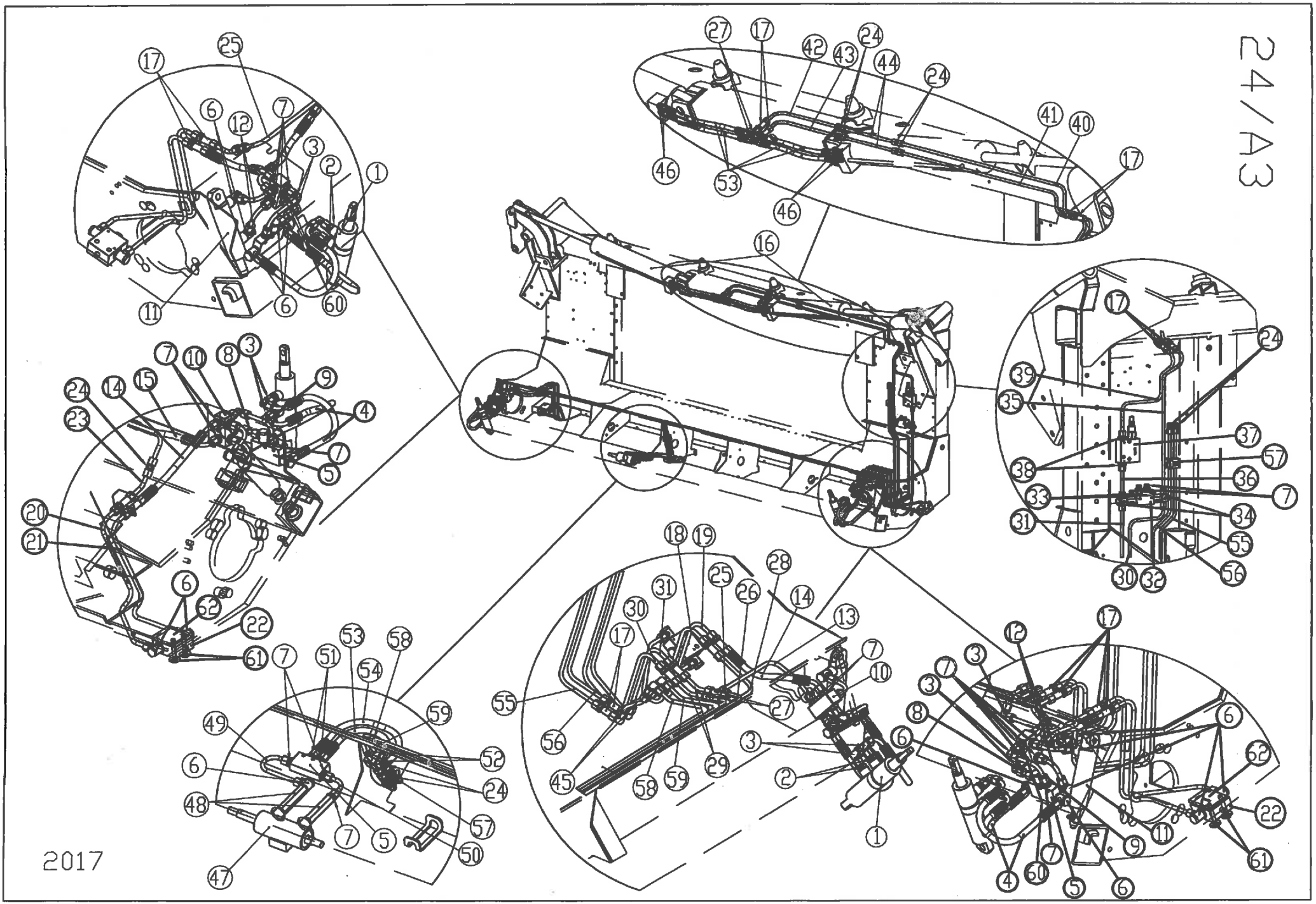
24/A3
2017

24/A3

HYDRAULIC FOLDABLE

Ref.	Part Number	Description		6306-80F	6308-80F
1.	1.354.397	Hydraulic cylinder		2	2
2.	1.309.601	Fitting - GE-8-PSM-ED		4	4
2.*	1.310.514	Fitting - 1 mm hole		4	4
3.	1.314.510	Fitting - 90deg. EVW 8 PL		14	14
4.	1.379.477	Hydraulic hose - 1SNDN6-410		4	4
5.	1.379.458	Dual controlled check valve - FPDLE 1/4 GS		3	3
6.	1.314.509	Fitting - SVWE 8 PL		15	15
7.	1.375.669	Fitting - GE8PLR-ED		19	19
8.	1.379.456	Hydraulic tube - (L=45)		2	2
9.	1.379.457	Hydraulic tube		2	2
10.	1.378.522	Divider		2	2
11.	1.356.118	Hydraulic cylinder		2	2
12.	1.378.612	Hydraulic tube		4	4
13.	1.373.576	Hydraulic tube		1	1
14.	1.378.619	Hydraulic hose - 1SNDN6-262		1	1
15.	1.330.757	Hydraulic hose - 1SNDN6-200		1	1
16.	1.376.278	Hydraulic cylinder			-
16.	1.375.144	Hydraulic cylinder		-	2
17.	1.308.783	Fitting - bulkhead - HYP 160-8-575 SV8		12	12
18.	1.373.577	Hydraulic tube		1	1
19.	1.373.313	Hydraulic tube		1	1
20.	1.373.315	Hydraulic tube		1	1
21.	1.373.314	Hydraulic tube		1	1
22.	1.378.526	Endswitch - VFCA - 1401		2	2
23.	1.377.076	Hydraulic tube		1	1
24.	1.377.062	Fitting - M14X1.5		12	12
25.	1.373.578	Hydraulic tube		1	1
26.	1.373.579	Hydraulic tube		1	1
27.	1.354.511	T-form - T8PL		4	4
28.	1.373.580	Hydraulic tube		1	1
29.	1.377.074	Hydraulic tube		1	1
30.	1.373.582	Hydraulic tube		1	1
31.	1.373.581	Hydraulic tube		1	1
32.	1.378.837	Dual controlled check valve - FDP 1/4		1	1
33.	79406004066	Hex bolt - M6X40		2	2
	74906000066	Hex nut - plastic insert - M6 - DIN982		2	2
34.	1.378.836	T-form - TH-8-PLR		2	2
35.	1.373.583	Hydraulic tube		1	1
36.	1.378.844	Hydraulic tube		1	1
37.	96703800001	Pressure limit valve - C. VS2 3/8"		1	1
38.	1.353.318	Fitting - M14X1.5 G3/8		2	2
39.	1.373.584	Hydraulic tube		1	1
40.	1.373.328	Hydraulic tube		1	1
41.	1.373.330	Hydraulic tube		1	1
42.	1.373.329	Hydraulic tube		1	1
43.	1.373.331	Hydraulic tube		1	1
44.	1.372.268	Hydraulic tube		2	2
45.	1.379.067	Hydraulic tube		2	2
46.	1.310.514	Fitting - 1 mm hole		4	4
46.*	1.355.481	Fitting - 0,7 mm hole		4	4

Note: * Loose parts

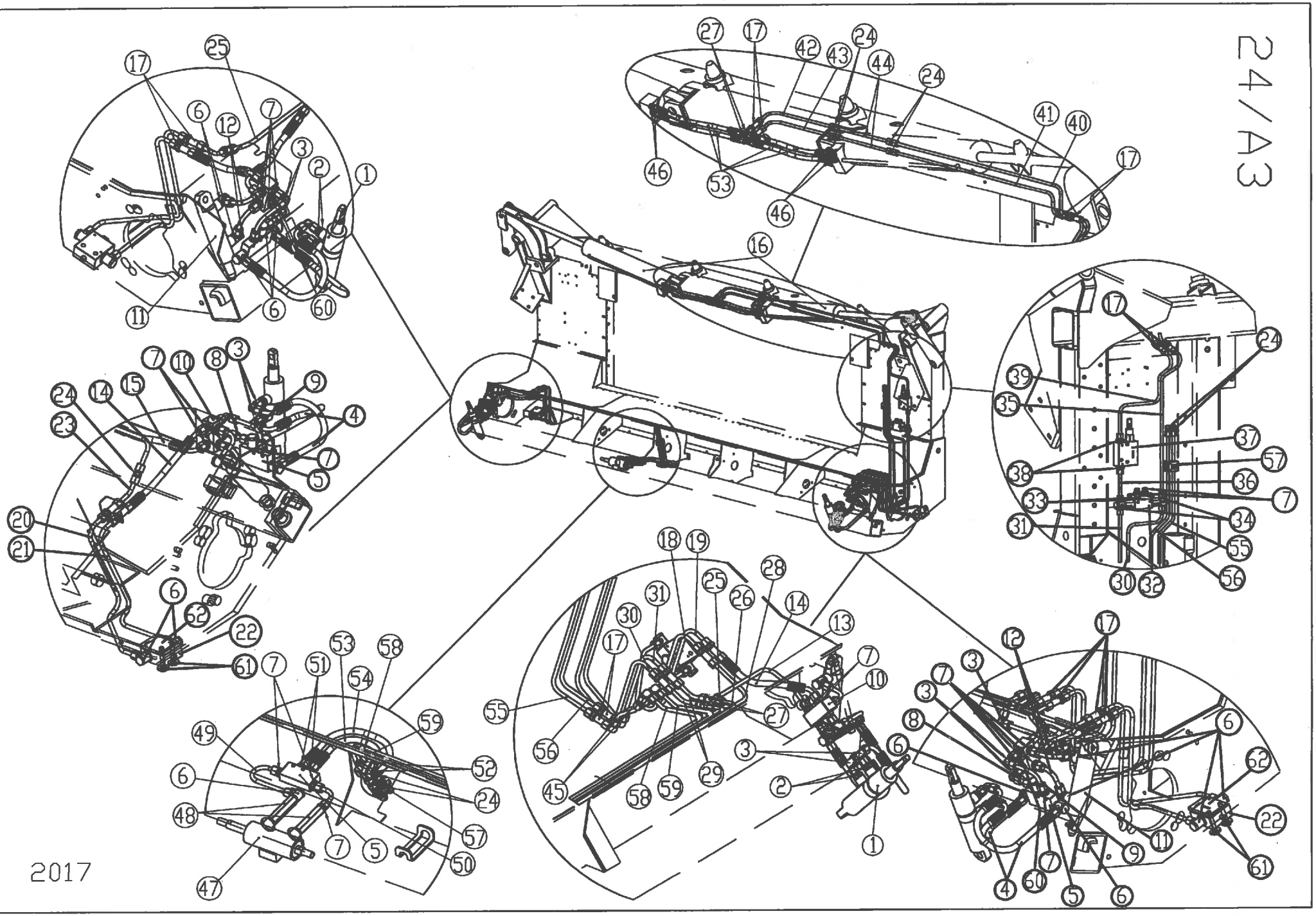
24/A3
2017

24/A3

HYDRAULIC FOLDABLE

Ref.	Part Number	Description		6306-80F	6308-80F
47.	1.373.725	Hydraulic cylinder		1	1
48.	1.378.696	Fitting - GE8PLR-ED		2	2
49.	1.373.449	Hydraulic tube		1	1
50.	1.373.991	Hydraulic tube		1	1
51.	1.379.776	Orifice DIA 0,5		2	2
52.	79406005066	Hex bolt - M6X50 - DIN933		2	2
	74906000066	Hex nut - plastic insert - M6 - DIN982		2	2
53.	1.373.585	Hydraulic hose - 1SNDN6-470		5	5
54.	1.373.488	Hydraulic hose - 1SNDN6-535		1	1
55.	1.379.065	Hydraulic tube - (L=609,7)		1	1
56.	1.379.066	Hydraulic tube - (L=610,7)		1	1
57.	1.377.061	Clamp		2	2
58.	1.377.072	Hydraulic tube - (L=1501,5)		1	1
59.	1.377.073	Hydraulic tube - (L=1531,5)		1	1
60.	80208001666	Hex socket head cap bolt - M8X16 - DIN912/8.8		2	2
	71808000060	Spring washer - M8 - DIN7980		2	2
61.	79408005066	Hex bolt - M8X50 - DIN933/8.8		4	4
	96702378160	Washer - M8 - DIN9021		4	4
62.	1.373.327	Washer		2	2

Note: * Loose parts

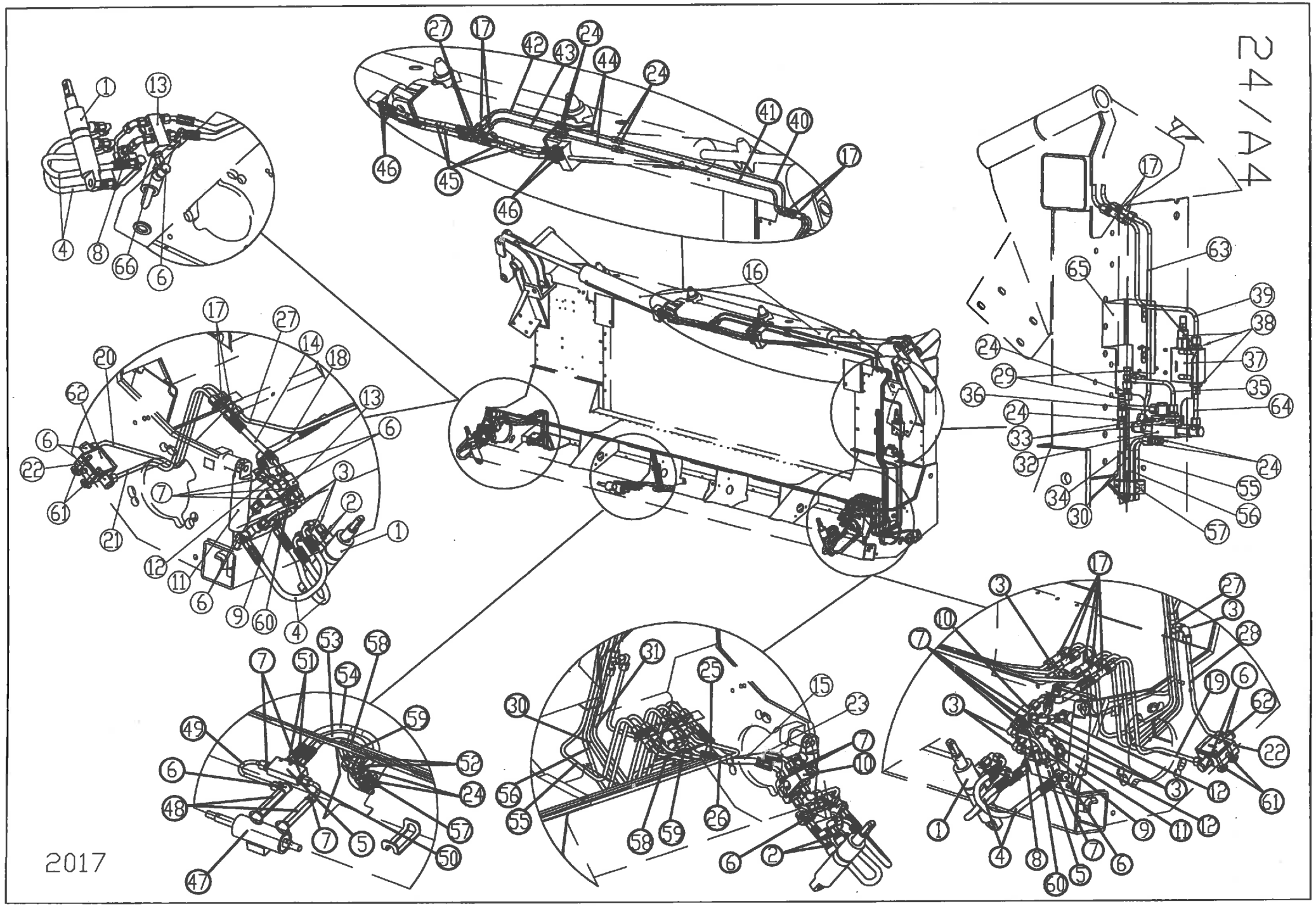
24/44
2017

24/A4

HYDRAULIC FOLDABLE

Ref.	Part Number	Description		6306-70F	6308-70F
1.	1.354.397	Hydraulic cylinder		2	2
2.	1.309.601	Fitting - GE-8-PSM-ED		4	4
2.*	1.310.514	Fitting - 1 mm hole		4	4
3.	1.314.510	Fitting - 90deg. EVW 8 PL		13	13
4.	1.379.477	Hydraulic hose - 1SNDN6-410		4	4
5.	1.379.458	Dual controlled check valve - FPDLE 1/4 GS		3	3
6.	1.314.509	Fitting - SVWE 8 PL		19	19
7.	1.375.669	Fitting - GE8PLR-ED		18	18
8.	1.379.456	Hydraulic tube - (L=45)		2	2
9.	1.379.457	Hydraulic tube		2	2
10.	1.378.522	Divider		1	1
11.	1.356.118	Hydraulic cylinder		2	2
12.	1.373.326	Hydraulic tube		3	3
13.	1.373.311	Divider		1	1
14.	1.378.619	Hydraulic hose - 1SNDN6-320 M14x1.5/45		1	1
15.	1.373.310	Hydraulic hose - 1SNDN6-232 M14x1.5		1	1
16.	1.376.278	Hydraulic cylinder		2	-
16.	1.375.144	Hydraulic cylinder		-	2
17.	1.308.783	Fitting - bulkhead - HYP 160-8-575 SV8		11	11
18.	1.373.308	Hydraulic hose - 1SNDN6-299 M14x1.5/45		1	1
19.	1.373.313	Hydraulic tube		1	1
20.	1.373.315	Hydraulic tube		1	1
21.	1.373.314	Hydraulic tube		1	1
22.	1.378.526	Endswitch - VFCA - 1401		2	2
23.	1.373.309	Hydraulic hose - 1SNDN6-276 M14x1.5/45		1	1
24.	1.377.062	Fitting - M14X1.5		11	11
25.	1.373.306	Hydraulic tube		1	1
26.	1.373.307	Hydraulic tube		1	1
27.	1.354.511	T-form - T8PL		3	3
28.	1.373.312	Hydraulic tube		1	1
29.	1.329.316	T-form - EL8PL		2	2
30.	1.373.318	Hydraulic tube		1	1
31.	1.373.319	Hydraulic tube		1	1
32.	1.378.837	Dual controlled check valve - FDP 1/4		1	1
33.	79406004066	Hex bolt - M6X40		2	2
	74906000066	Hex nut - plastic insert - M6 - DIN982		2	2
34.	1.373.320	Hydraulic tube		1	1
35.	1.373.325	Hydraulic tube		1	1
36.	1.373.323	Hydraulic tube		1	1
37.	96703800001	Pressure limit valve - C. VS2 3/8"		1	1
38.	1.353.318	Fitting - M14X1.5 G3/8		2	2
39.	1.373.324	Hydraulic tube		1	1
40.	1.373.328	Hydraulic tube		1	1
41.	1.373.330	Hydraulic tube		1	1
42.	1.373.329	Hydraulic tube		1	1
43.	1.373.331	Hydraulic tube		1	1
44.	1.372.268	Hydraulic tube		2	2
45.	1.373.332	Hydraulic hose - 1SNDN6-220 M14x1.5		4	4
46.	1.310.514	Fitting - 1 mm hole		4	4
46.*	1.355.481	Fitting - 0,7 mm hole		4	4

Note: * Loose parts

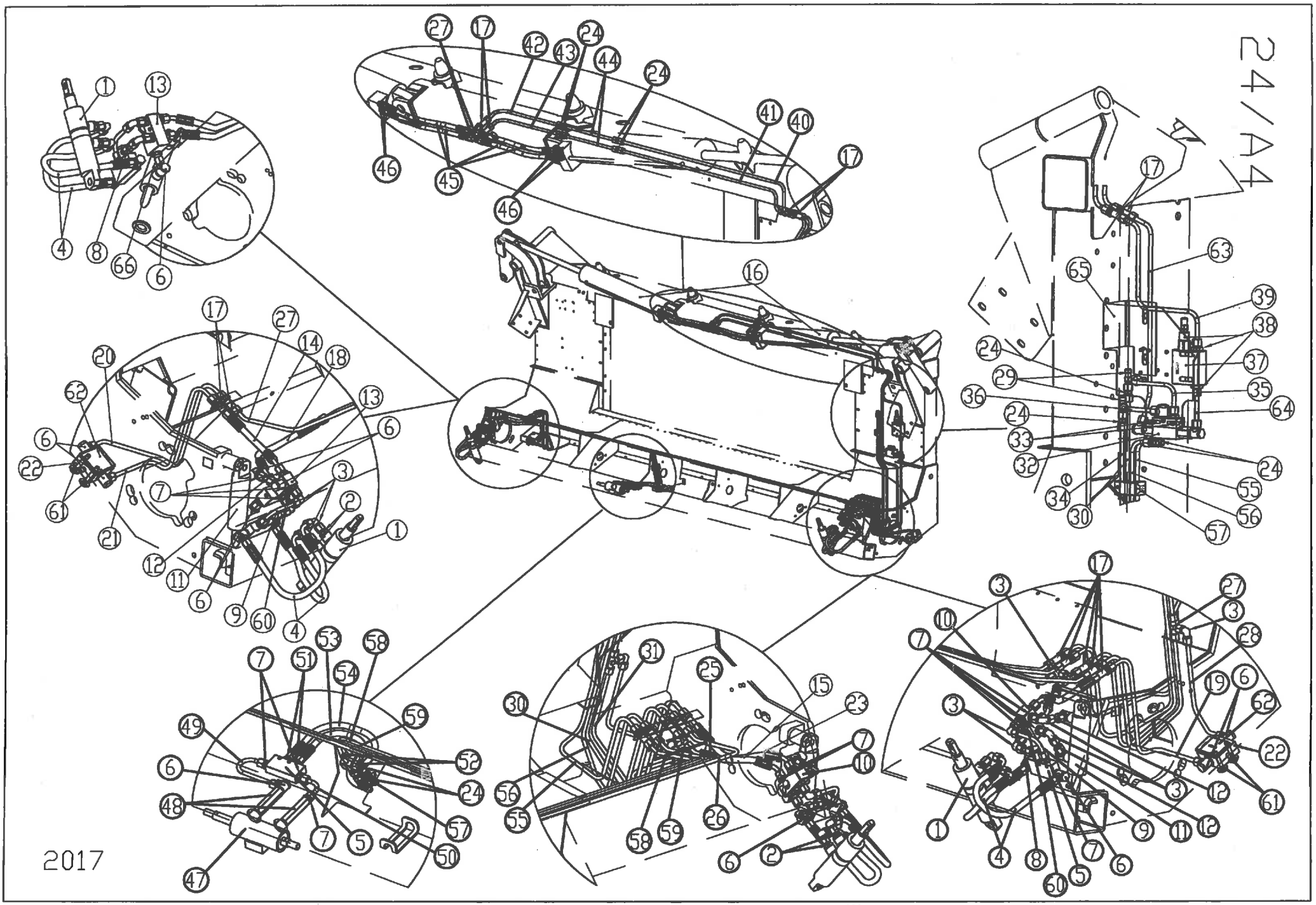
24/44
2017

24/A4

HYDRAULIC FOLDABLE

Ref.	Part Number	Description		6306-70F	6308-70F
47.	1.373.725	Hydraulic cylinder		1	1
48.	1.378.696	Fitting - GE8PLR-ED		2	2
49.	1.373.449	Hydraulic tube		1	1
50.	1.373.991	Hydraulic tube		1	1
51.	1.379.776	Orifice DIA 0,5		2	2
52.	79406005066	Hex bolt - M6X50 - DIN933		3	3
	74906000066	Hex nut - plastic insert - M6 - DIN982		3	3
53.	1.373.585	Hydraulic hose - 1SNDN6-470		1	1
54.	1.373.488	Hydraulic hose - 1SNDN6-535		1	1
55.	1.373.316	Hydraulic tube		1	1
56.	1.373.317	Hydraulic tube		1	1
57.	1.377.061	Clamp		3	3
58.	1.373.304	Hydraulic tube		1	1
59.	1.373.305	Hydraulic tube		1	1
60.	80208001666	Hex socket head cap bolt - M8X16 - DIN912/8.8		2	2
	71808000060	Spring washer - M8 - DIN7980		2	2
61.	79408005066	Hex bolt - M8X50 - DIN933/8.8		4	4
	96702378160	Washer - M8 - DIN9021		4	4
62.	1.373.327	Washer		2	2
63.	1.373.321	Hydraulic tube		1	1
64.	1.373.322	Hydraulic tube		1	1
65.	1.373.618	Support plate		1	1
66.	1.355.187	Fitting - EGE-8-LR-ED		1	1

Note: * Loose parts

24/B

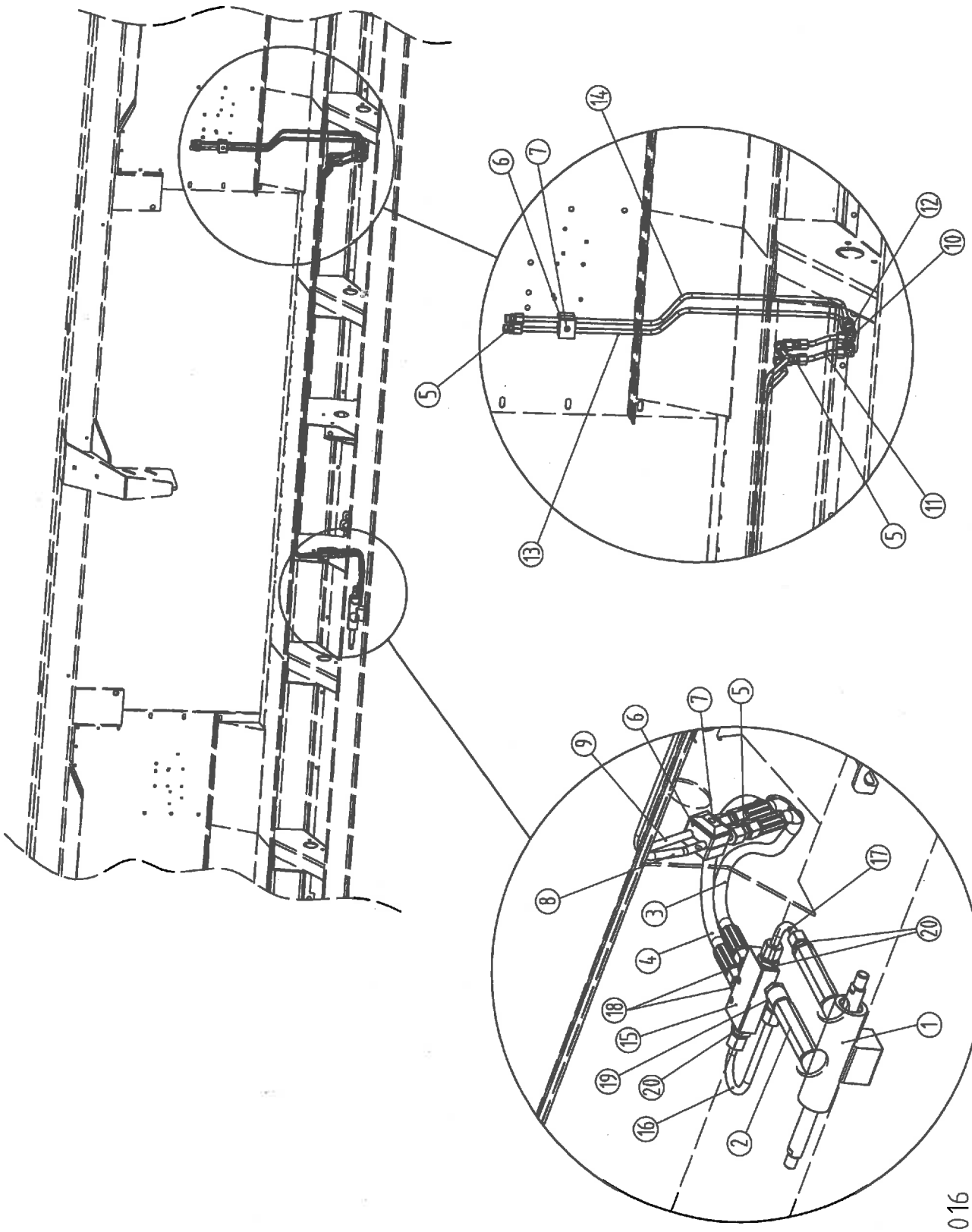

2016

HYDRAULIC RIGID (2014→)

Ref.	Part Number	Description		6306	6308	6312	6108 6208	6112 6212	6316
1.	1.376.104	Hydraulic cylinder	→2015	1	1	1	1	1	1
1.	1.373.725	Hydraulic cylinder	2016→	1	1	1	1	1	1
2.	1.378.696	Fitting - GE8PLR-ED		2	2	2	2	2	2
3.	1.376.795	Hydraulic hose 1SNDN6-290	→2015	1	1	1	1	1	1
3.	1.373.585	Hydraulic hose 1SNDN6-470	2016→	1	1	1	1	1	1
4.	1.330.772	Hydraulic hose 1SNDN6-375	→2015	1	1	1	1	1	1
4.	1.373.488	Hydraulic hose 1SNDN6-535	2016→	1	1	1	1	1	1
5.	1.377.062	Fitting - M14X1.5		4	4	4	6	6	6
6.	1.377.061	Clamp		2	2	2	2	2	2
7.	79406005066	Hex bolt M6x50		2	2	2	2	2	2
-	74900600066	Hex nut - plastic insert M6		2	2	2	2	2	2
8.	1.377.073	Hydraulic tube L=1531,5		1	1	1	-	-	1
8.	1.379.679	Hydraulic tube L=1430,5		-	-	-	1	1	-
9.	1.377.072	Hydraulic tube L=1501,5		1	1	1	-	-	1
9.	1.379.678	Hydraulic tube L=1400,5		-	-	-	1	1	-
10.	1.314.510	Fitting - 90deg. EVW 8 PL		-	-	-	4	4	4
11.	1.379.067	Hydraulic tube		-	-	-	2	2	2
12.	1.308.783	Fitting - bulkhead HYP 160-8-575 SV8		2	2	2	2	2	2
13.	1.379.065	Hydraulic tube L=609,7		-	-	-	1	1	1
13.	1.377.065	Hydraulic tube		1	1	-	-	-	-
13.	1.378.637	Hydraulic tube		-	-	1	-	-	-
14.	1.379.066	Hydraulic tube L=610,7		-	-	-	1	1	1
14.	1.377.066	Hydraulic tube		1	1	-	-	-	-
14.	1.378.638	Hydraulic tube		-	-	1	-	-	-
15.	1.379.458	Dual controlled check valve FPDLE 1/4 GS	2016→	1	1	1	1	1	1
16.	1.373.449	Hydraulic tube	2016→	1	1	1	1	1	1
17.	1.373.991	Hydraulic tube	2016→	1	1	1	1	1	1
18.	1.379.776	Orifice DIA 0,5		2	2	2	2	2	2
19.	1.314.509	Fitting - SVWE8PL	2016→	1	1	1	1	1	1
20.	1.375.669	Fitting - GE8PLR-ED	2016→	3	3	3	3	3	3

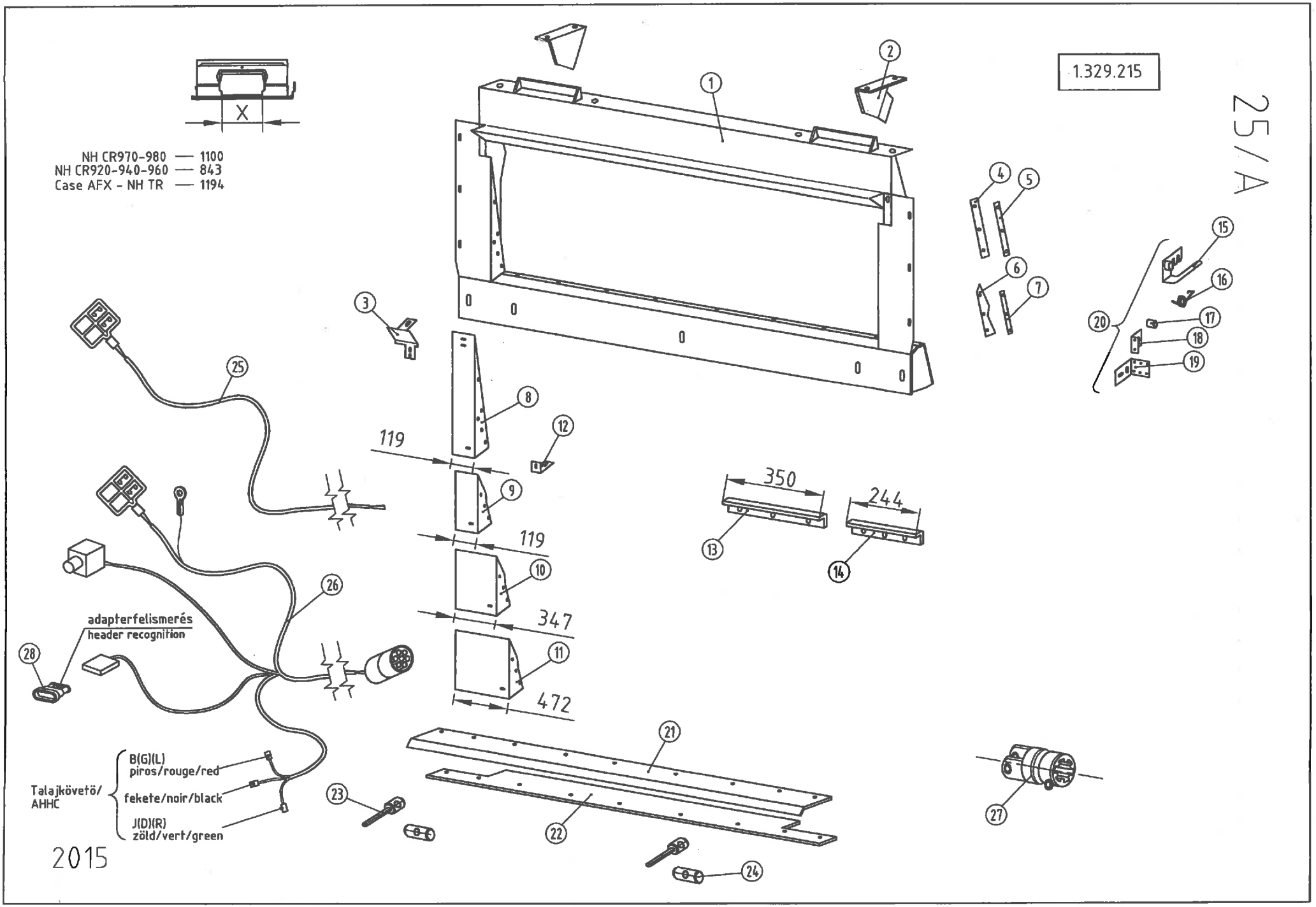
1.329.215
25/A
X
NH CR970-980 — 1100
NH CR920-940-960 — 843
Case AFX - NH TR — 1194
119
119
347
472
350
244
adapterfelismerés
header recognition
Talajkövető/
AHHC
B(G)(L)
piros/rouge/red
fekete/noir/black
J(D)(R)
zöld/vert/green
2015

MOUNTING KIT: CNH CX, CR, TR, CASE AFX (2010.→FOLDING; FIXED 2011->)

Ref.	Part Number	Description		6-8R	12-16R
1.	1.329.216	Frame assy		1	1
2.	1.326.285	Inlet - left NH TR		1	1
2.	1.326.286	Inlet - right NH TR		1	1
3.	1.329.238	Inlet - left for NH TR		1	1
3.	1.329.239	Inlet - right for NH TR		1	1
4.	1.328.547	Rubber plate		2	2
5.	1.328.548	Flat iron		2	2
6.	1.329.254	Rubber plate		2	2
7.	1.329.255	Flat iron		2	2
8.	1.329.236	Inlet - left l=119 for NH TR		1	1
8.	1.329.237	Inlet - right l=119 for NH TR		1	1
9.	1.329.240	Inlet - left l=119 for NH AFX		1	1
9.	1.329.241	Inlet - right l=119 for NH AFX		1	1
10.	1.329.242	Inlet - left l=347 for NH CR970-980		1	1
10.	1.329.243	Inlet - right l=347 for NH CR970-980		1	1
11.	1.329.244	Inlet - left l=472 for NH CR920-940-960		1	1
11.	1.329.245	Inlet - right l=472 for NH CR920-940-960		1	1
12.	1.329.235	Support		2	2
13.	1.329.294	Angle - for NH TR		-	-
13.	1.329.294	Angle - for AFX		-	-
13.	1.329.294	Angle - for NH CR970-980	→2013	1	1
13.	1.379.632	Angle - for NH CR970-980	2014→	1	1
13.	1.329.294	Angle - for NH CR920-940-960	→2013	2	2
13.	1.379.632	Angle - for NH CR920-940-960	2014→	2	2
14.	1.329.295	Angle - for NH TR	→2013	2	2
14.	1.379.631	Angle - for NH TR	2014→	2	2
14.	1.329.295	Angle - for AFX	→2013	2	2
14.	1.379.631	Angle - for AFX	2014→	2	2
14.	1.329.295	Angle - for NH CR970-980		-	-
14.	1.329.295	Angle - for NH CR920-940-960	→2013	2	2
14.	1.379.631	Angle - for NH CR920-940-960	2014→	2	2
15.	1.329.247	Arm assy		1	1
16.	1.329.253	Spring		1	1
17.	1.329.250	Bushing		1	1
18.	1.329.251	Support plate		1	1
19.	1.329.296	Support		1	1
20.	1.329.246	Support assy NH		1	1
21.	1.329.233	Flat iron		1	1
22.	1.329.234	Rubber plate		1	1
23.	1.327.601	Retainer - for NH TR only		2	2
24.	1.327.536	Pin - for NH TR only		2	2
25.	1.327.638	Wire		1	1
26.	1.353.422	Wire CASE AFX, NH CR (see note below!)		1	1
26.	1.353.561	Wire CASE AFX, NH CR (see note below!)		1	1
27.	1.327.663	Yoke - 6spline (P400)		2	-
27.	1.327.488	Yoke - 6spline (P500)		-	2
28.	1.332.458	Header recognizer	2014→	1	1

Note for item: 26.- 1.353.422 is for those machines which have hydraulic snapping plate adjustment 26.- 1.353.561 is for those machines which have electric snapping plate adjustment

1.379.308

25/B

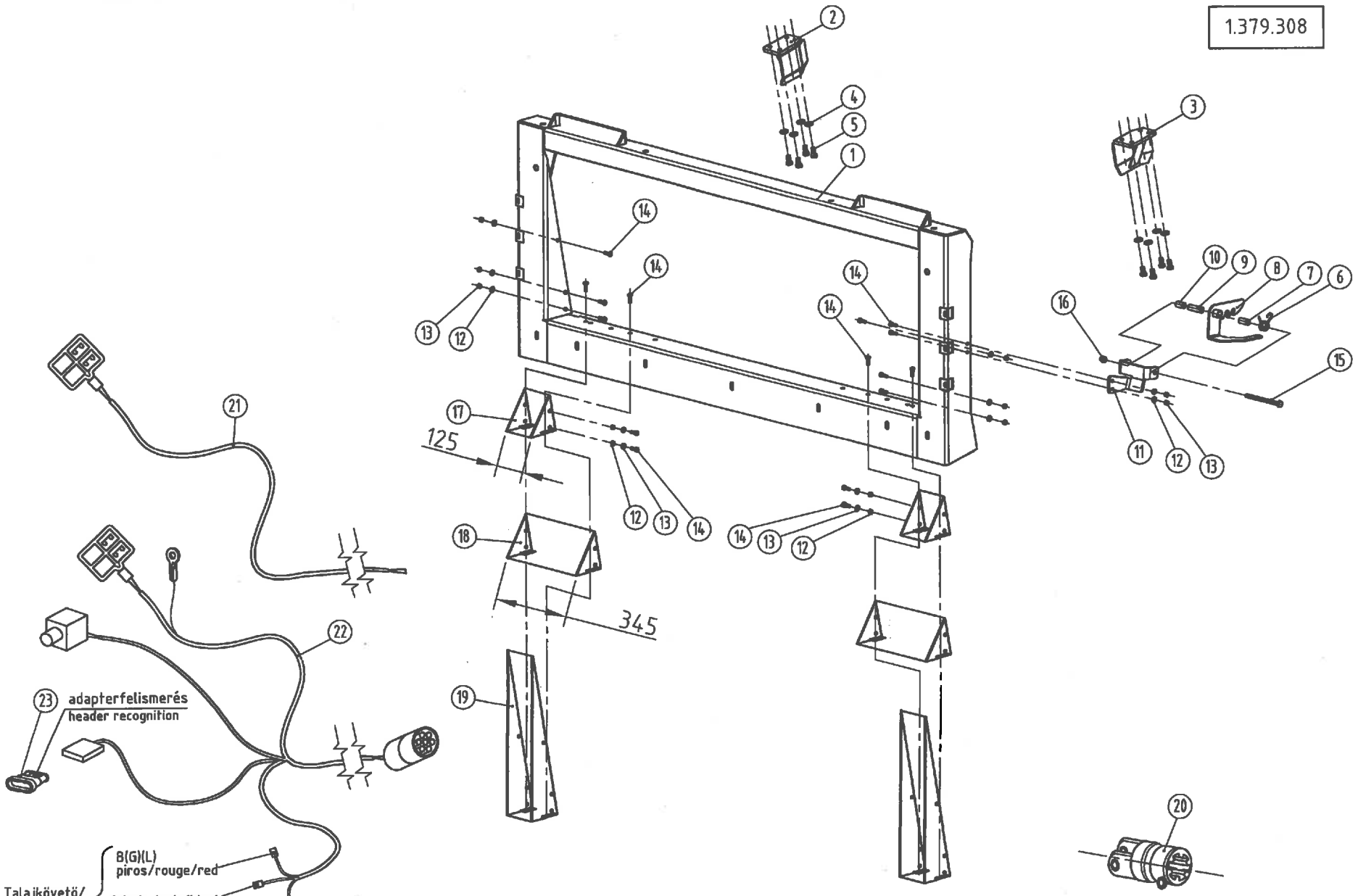

2016

MOUNTING KIT: CNH CX, CR, TR, TX, TC, TF, CASE AFX (2016→)

Ref.	Part Number	Description		6-8 R	12-16 R
1.	1.379.307	Frame assy		1	1
2.	1.376.548	Inlet - right NH TX 62,64,66,68 ; TC 56,59 ; TF 76 → 2002		1	1
3.	1.376.547	Inlet - left NH TX 62,64,66,68 ; TC 56,59 ; TF 76 → 2002		1	1
4.	91623938861	Spring washer-A10		8	8
5.	79410002566	Hex bolt M10x25		8	8
6.	1.329.253	Spring		1	1
7.	1.329.250	Bushing		1	1
8.	1.329.247	Arm assy		1	1
9.	1.376.541	Spacer		1	1
10.	1.376.542	Spacer		1	1
11.	1.372.283	Support		1	1
12.	91623938761	Spring washer - A8		18	18
13.	73508000066	Hex nut - M8		18	18
14.	79408002566	Hex bolt M8x25		18	18
15.	79312016066	Hex bolt M12x160		1	1
16.	74901200066	Lock nut - plastic insert M12		1	1
17.	1.379.322	Inlet l=125		2	2
18.	1.379.323	Inlet l=345		2	2
19.	1.372.282	Inlet NH TX 62,64,66,68 ; TC 56,59 ; TF 76 → 2002		2	2
20.	1.327.663	Yoke - 6spline (P400)		2	-
20.	1.327.488	Yoke - 6spline (P500)		-	2
21.	1.327.638	Wire		1	1
22.	1.353.422	Wire CASE AFX, NH CR (see note below!)		1	1
22.	1.353.561	Wire CASE AFX, NH CR (see note below!)		1	1
23.	1.332.458	Header recognizer		1	1

Note for item: 22.- 1.353.422 is for those machines which have hydraulic snapping plate adjustment,
22.- 1.353.561 is for those machines which have electric snapping plate adjustment

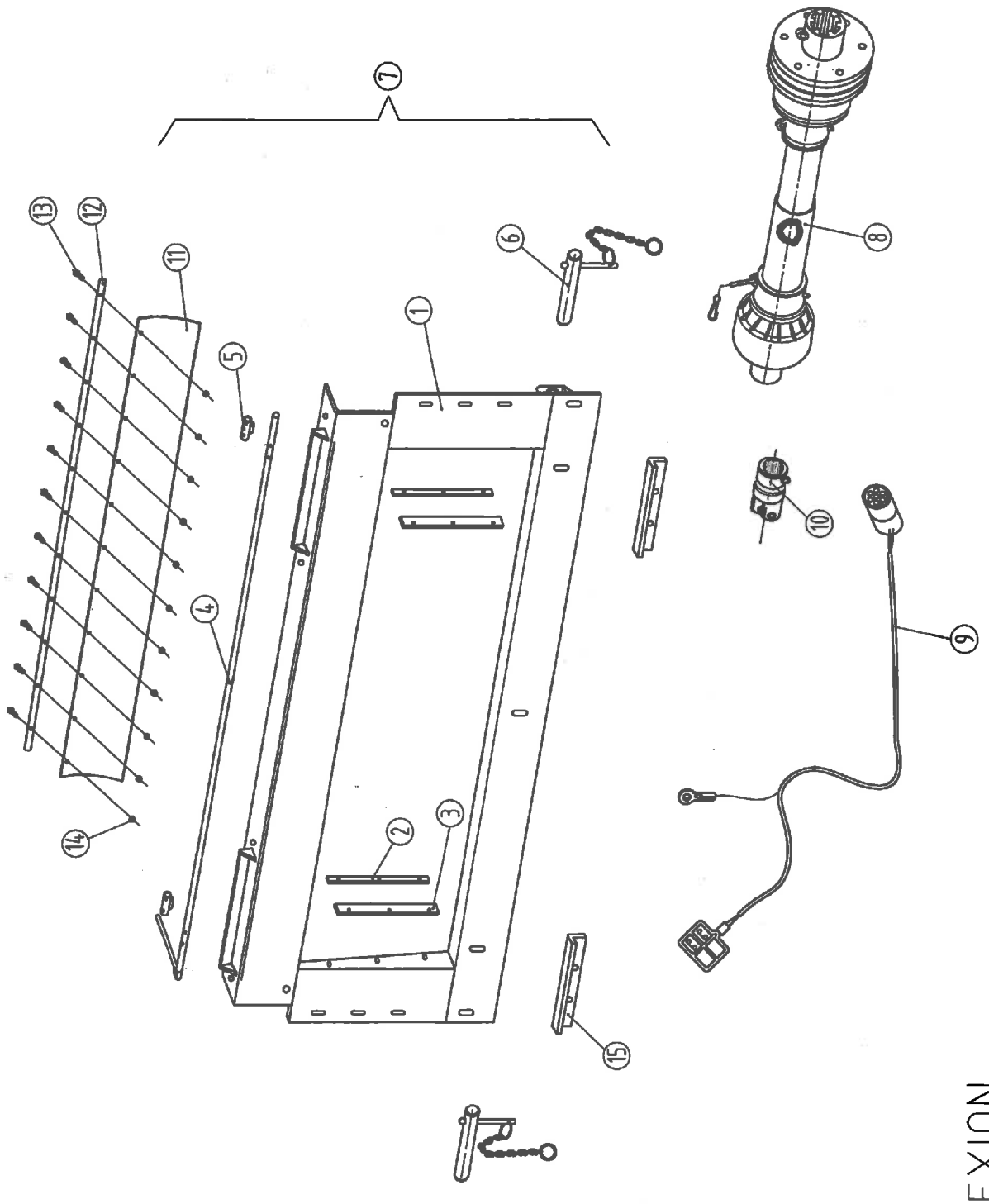

CLAAS LEXION
2015

MOUNTING KIT: LEXION

Ref.	Part Number	Description		6-8R	12-16R
1	1.329.485	Filler welded		1	1
2	1.320.280	Flat iron		2	2
3	1.328.539	Rubber plate		2	2
4	1.329.500	Fixture welded		1	1
5	1.329.501	Fixture		2	2
6	1.329.498	Safety-pin		2	2
7	1.329.484	Mounting kit assy		1	1
8	-	PTO drive shaft		See page 1!	See page 1!
9	1.354.171	Wire		1	1
10.	1.327.662	Yoke - 21spline (P400)		2	-
10.	1.327.486	Yoke - 21spline (P500)		-	2
11.	1.332.478	Rubber plate	2014→	1	1
12.	1.332.479	Flat iron	2014→	1	1
13.	79408002566	Hex bolt M8x25 DIN933/8.8	2014→	11	11
14.	74908000066	Hex nut - plastic insert	2014→	11	11
15.	1.379.635	Angle	2014→	2	2

1.329.386

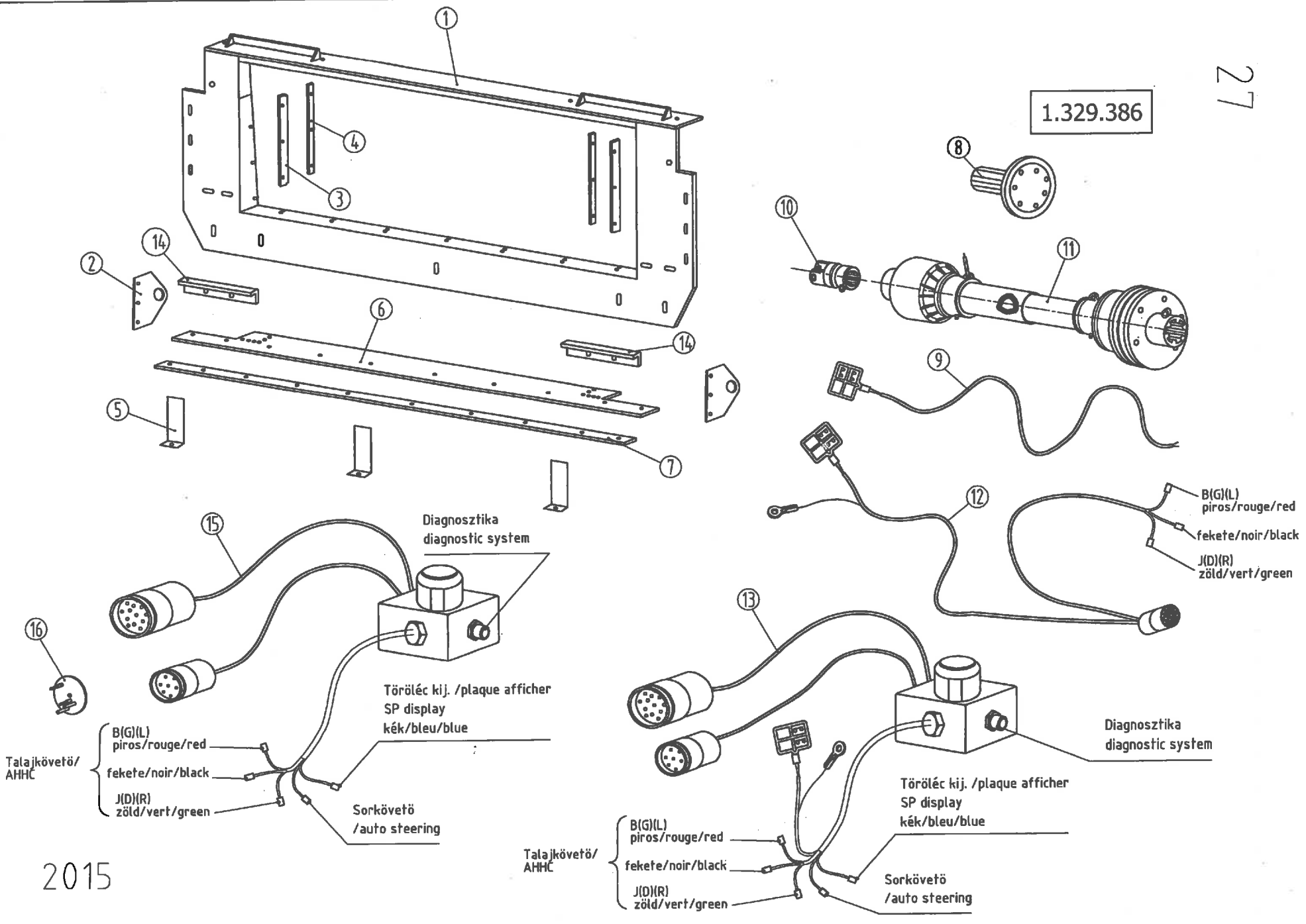

2015

MOUNTING KIT: JD

Ref.	Part Number	Description		6-8R	12-16R
1.	1.329.387	Frame assy		1	1
2.	1.329.398	Retainer		2	2
3.	1.328.539	Rubber plate		2	2
4.	1.320.280	Flat iron		2	2
5.	1.329.397	Filler		3	3
6.	1.320.828	Rubber plate		1	1
7.	1.329.400	Plate		1	1
8.	1.321.225	Shaft assy - 21 spline		2	2
9.	1.327.638	Wire JD pre "60" series		1	1
10.	1.327.662	Yoke - 21spline (P400)		2	-
10.	1.327.486	Yoke - 21spline (P500)		-	2
11.	-	PTO drive shaft		See page 1!	See page 1!
12.	1.353.562	Harness JD "60" series (see note below!)		1	1
13.	1.353.559	Harness JD "60" series (see note below!)		1	1
14.	1.379.635	Angle	2014→	2	2
15.	1.327.062	Harness (only for folding machines)		1	1
16.	1.327.066	Jumper (only for rigid machines)		1	1

Note for item: 12.- 1.353.562 is for those machines which have hydraulic snapping plate adjustment. Note for item: 13.- 1.353.559 is for those machines which have electric snapping plate adjustment

Fix vázú csőtörő hidraulikus törőlécállítással
Fixed corn heads with hydr. SPA

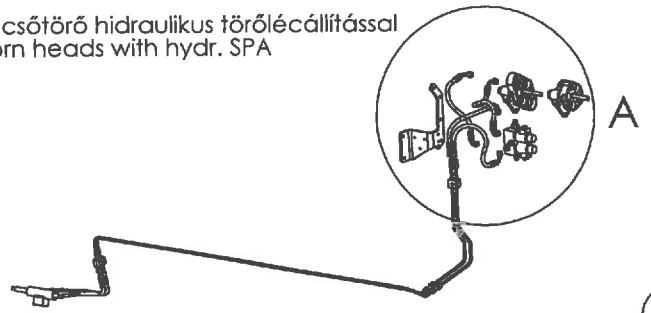

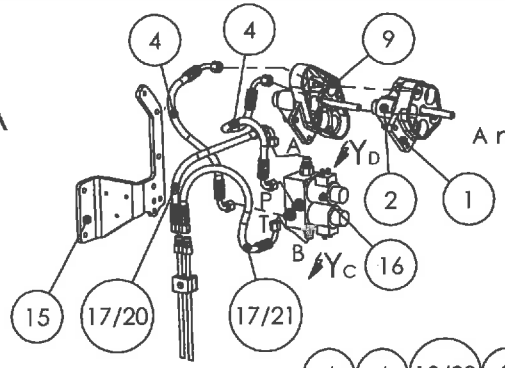

A nézet

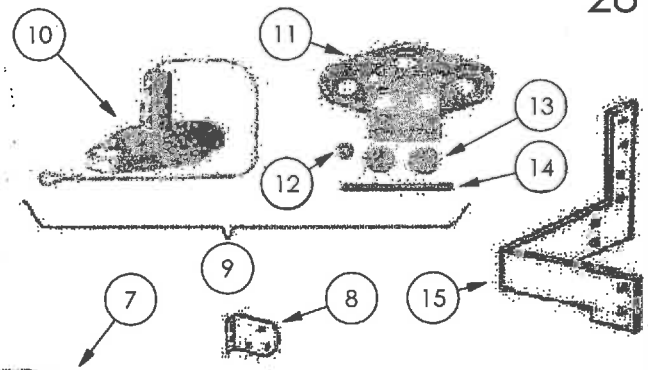

Csukható csőtörő hidraulikus törőlécállítással
Foldable corn heads with hydr. SPA

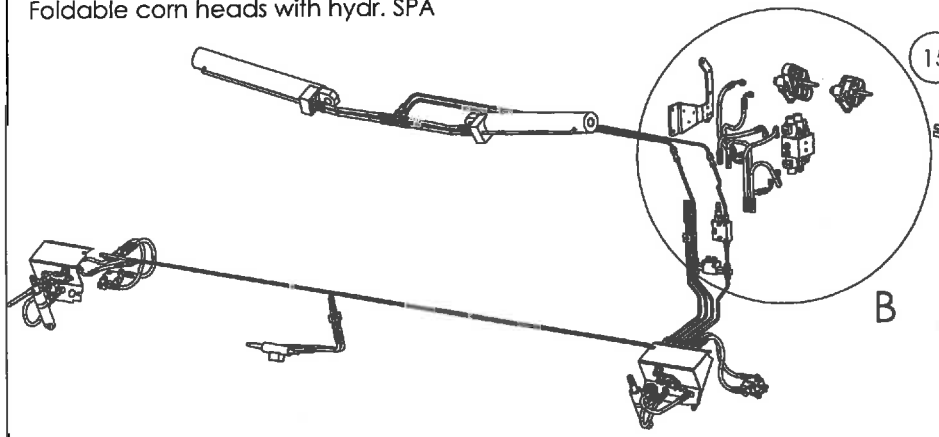

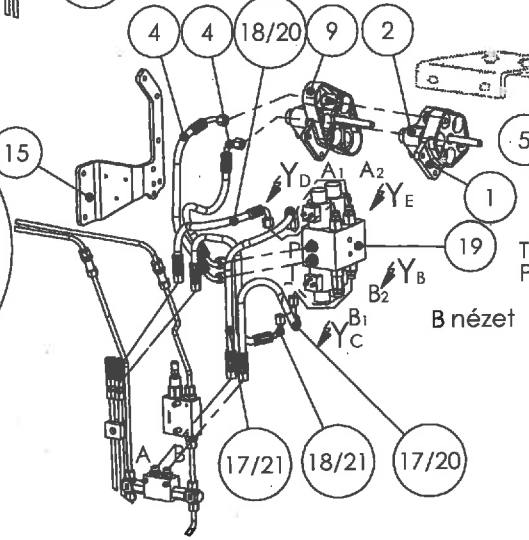

B nézet

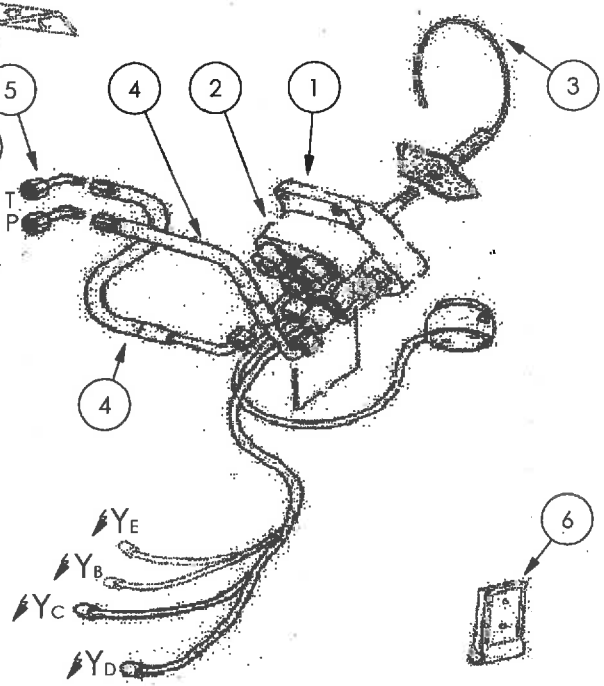

Csukható csőtörő elektormos törőlécállítással
Foldable corn heads with electr. SPA

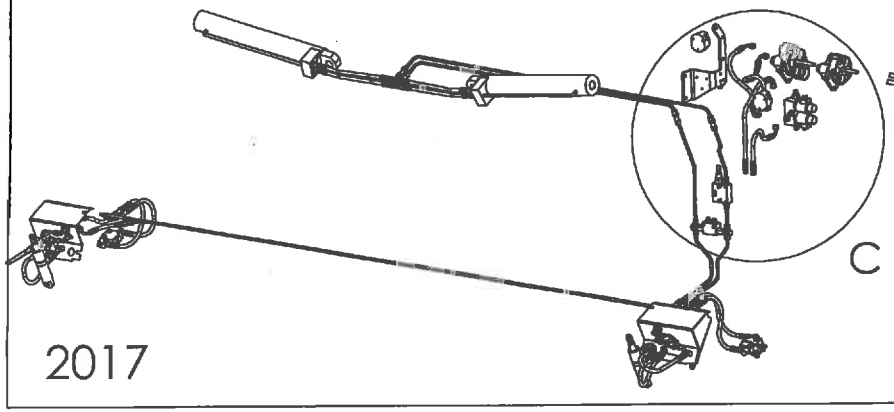

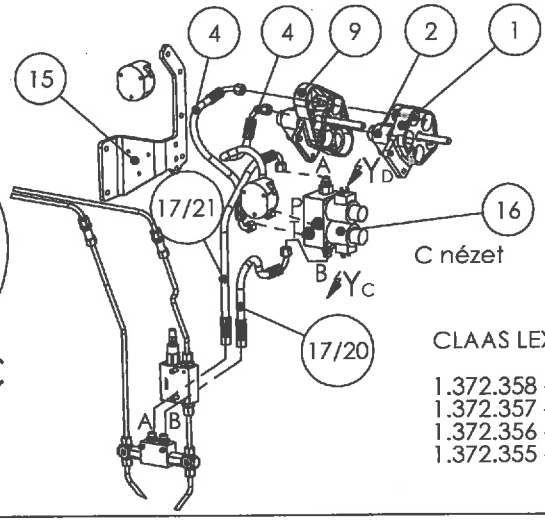

C nézet

CLAAS LEXION

1.372.358 - LEXION 400
1.372.357 - LEXION 400 for foldable corn heads with hydr. SPA
1.372.356 - LEXION 500
1.372.355 - LEXION 500 for foldable corn heads with hydr. SPA

2017

LEXION MULTI-COUPLING KITS

Ref.	Part Number	Description		Rigid models with hydr. SPA or folding models with electr. SPA	Folding models with hydr. SPA
1.	668.800.0	Multi-coupling for LEXION 400 serie		1	1
2.	013.208.2	Cable-kit		1	1
3.	668.818.0	Cover		1	1
4.	1.319.232	Hydraulic hose (575mm) 1SNDN6-575	→2010	2	2
4.	1.323.327	Hydraulic hose (400mm) 1SNDN6-400	2011→	2	2
5.	1.314.510	Fitting - 90deg. EVW 8 PL	→2010	2	3
6.	013.268.0	Block	→2016	1	1
7.	1.309.604	Plate	→2010	1	-
8.	994.610.0	Console	→2010	1	1
9.	905.875.0	Hydraulic kit for LEXION 500 series		1	1
10.	683.725.0	Cover		1	1
11.	683.721.1	Socket		1	1
12.	73612000066	Low nut - M12 - DIN936		1	1
13.	213.607.0	Plug		2	2
14.	683.722.1	Stud-bolt		1	1
15.	1.351.922	Support	→2010	1	1
15.	1.378.528	Support	2011→	1	1
16.	1.372.373	Hydraulic valve		1	-
17.	1.319.233	Hydraulic hose (315mm) 1SNDN6-315	→2010	2	2
18.	1.353.195	Hydraulic hose (1200mm) 1SNDN6-1200	→2010	-	2
19.	1.372.374	Hydraulic valve		-	1
20.	1.314.514	Hydraulic hose (365mm) 1SNDN6-365	2011→	1	2
21.	1.351.402	Hydraulic hose (475mm) 1SNDN6-475	2011→	1	2

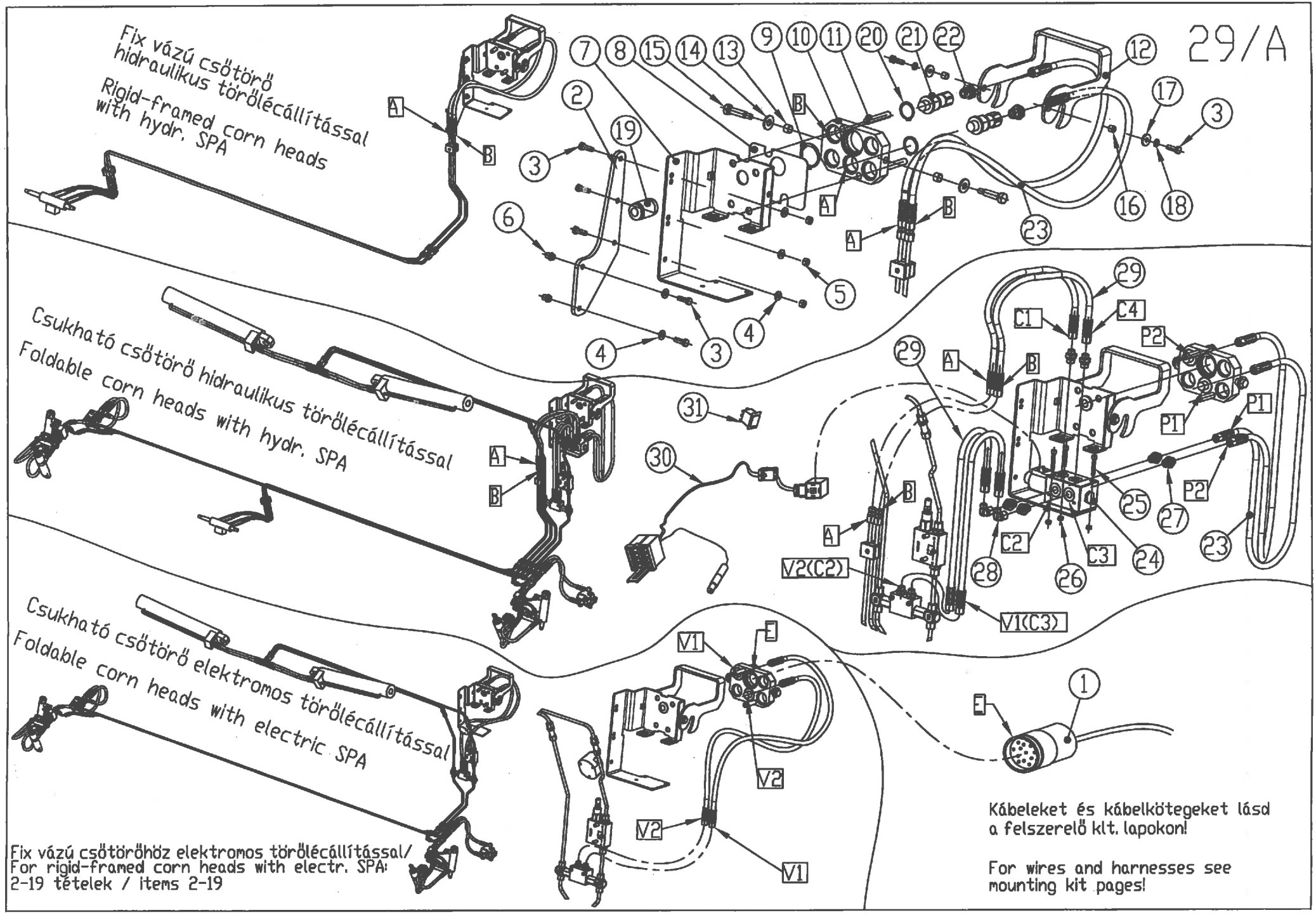
Fix vázú csötörő
hidraulikus törölécállítással
Rigid-framed corn heads
with hydr. SPA
Csukható csötörő hidraulikus törölécállítással
Foldable corn heads with hydr. SPA
Csukható csötörő elektromos törölécállítással
Foldable corn heads with electric SPA
Fix vázú csötörőhöz elektromos törölécállítással/
For rigid-framed corn heads with electr. SPA:
2-19 tételek / items 2-19
Kábeleket és kábelkötegeket lásd
a felszerelő klt. lapokon!
For wires and harnesses see
mounting kit pages!

MULTI-COUPLING KIT: JD

Ref.	Part Number	Description	RIGID with hydr. SPA	RIGID with electr. SPA	FOLDABLE with hydr. SPA	FOLDABLE with electr. SPA
1.	See mounting kit pages	Harness				
2.	1.355.489	Support plate	1	1	1	1
3.	79408002566	Hex bolt M8x25 - DIN933/8.8	7	7	7	7
4.	91623938761	Spring washer	5	5	5	5
5.	73508000066	Hex nut M8 - DIN934	3	3	3	3
6.	70808000026	Rivet nut M8	2	2	2	2
7.	1.379.398	Bracket	1	1	1	1
8.	1.353.553	Pad H201010	1	1	1	1
9.	70200004561	Retaining ring - external 45x1.6 - DIN471	1	1	1	1
10.	1.327.000	Support - JD	1	1	1	1
11.	1.327.003	Pin	2	2	2	2
12.	1.354.106	Arm	1	1	1	1
13.	1.327.002	Ring	2	2	2	2
14.	1.377.251	Washer	2	2	2	2
15.	1.327.001	Bolt	2	2	2	2
16.	1.354.107	Spacer	2	2	2	2
17.	1.314.099	Washer	2	2	2	2
18.	72208000060	Spring washer M8 - DIN128/A	2	2	2	2
19.	1.353.552	Plug H176288	1	1	1	1
20.	1.327.052	Retaining ring - external 32x1.5 - DIN471	2	-	2	2
21.	1.327.054	Hydraulic quick-coupler	2	-	2	2
22.	1.327.053	Fitting M14x1.5/UNF 3/4-16	2	-	2	2
23.	1.353.195	Hydraulic hose 1SNDN6-1200	2	-	2	2
24.	1.379.394	Directional valve LC 6/2	-	-	1	-
25.	80206004066	Hex socket head cap bolt M6x40 DIN912/8.8	-	-	3	-
26.	74906000066	Hex nut - plastic insert M6 - DIN985	-	-	3	-
27.	1.353.318	Fitting - M14X1.5 /G3/8	-	-	6	-
28.	1.314.510	Fitting - 90deg. EVW 8 PL	-	-	2	-
29.	1.331.795	Hydraulic hose 1SNDN6-630	-	-	4	-
30.	1.353.204	Harness	-	-	1	-
31.	1.353.213	Switch 6FH 007 832-121 HELLA	-	-	1	-
-	1.379.399	Holder assy (item 7,12,16,17)				
-	1.379.472	Directional valve assy (24-31)				
-	1.379.474	Hydraulic multipoint kit. (2,6,8,9,10,11,13,14,15,19,20,21,22,32)				

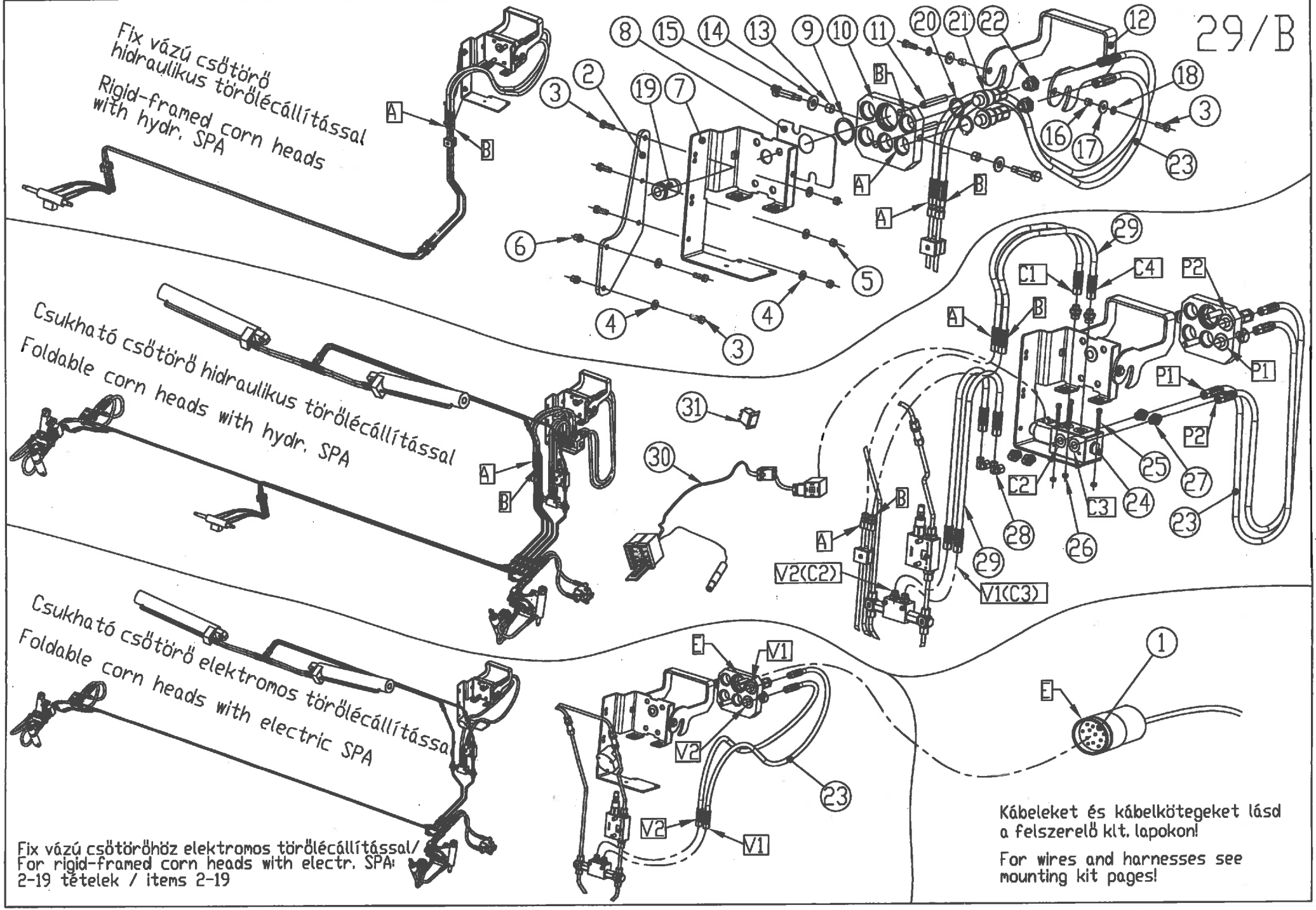
Fix vázú csötörő
hidraulikus törölécállítással
Rigid-framed corn heads
with hydr. SPA
Csukható csötörő hidraulikus törölécállítással
Foldable corn heads with hydr. SPA
Csukható csötörő elektromos törölécállítással
Foldable corn heads with electric SPA
Fix vázú csötöröhöz elektromos törölécállítással/
For rigid-framed corn heads with electr. SPA:
2-19 tételek / items 2-19
Kábeleket és kábelkötegeket lásd
a felszerelö klt. lapokon!
For wires and harnesses see
mounting kit pages!

MULTI-COUPLING KIT: AGCO

Ref.	Part Number	Description	RIGID with hydr. SPA	RIGID with electr. SPA	FOLDABLE with hydr. SPA	FOLDABLE with electr. SPA
1.	See mounting kit pages	Harness				
2.	1.355.489	Support plate	1	1	1	1
3.	79408002566	Hex bolt M8x25 - DIN933/8.8	7	7	7	7
4.	91623938761	Spring washer	5	5	5	5
5.	73508000066	Hex nut M8 - DIN934	3	3	3	3
6.	70808000026	Rivet nut M8	2	2	2	2
7.	1.379.398	Bracket	1	1	1	1
8.	1.353.553	Pad H201010	1	1	1	1
9.	70200004561	Retaining ring - external 45x1.6 - DIN471	1	1	1	1
10.	1.356.060	Support - JD	1	1	1	1
11.	1.327.003	Pin	2	2	2	2
12.	1.354.106	Arm	1	1	1	1
13.	1.327.002	Ring	2	2	2	2
14.	1.377.251	Washer	2	2	2	2
15.	1.327.001	Bolt	2	2	2	2
16.	1.354.107	Spacer	2	2	2	2
17.	1.314.099	Washer	2	2	2	2
18.	72208000060	Spring washer M8 - DIN128/A	2	2	2	2
19.	1.353.552	Plug H176288	1	1	1	1
20.	1.327.052	Retaining ring - external 32x1.5 - DIN471	2	-	2	2
21.	1.327.054	Hydraulic quick-coupler	2	-	2	2
22.	1.327.053	Fitting M14x1.5/UNF 3/4-16	2	-	2	2
23.	1.353.195	Hydraulic hose 1SNDN6-1200	2	-	2	2
24.	1.379.394	Directional valve LC 6/2	-	-	1	-
25.	80206004066	Hex socket head cap bolt M6x40 DIN912/8.8	-	-	3	-
26.	74906000066	Hex nut - plastic insert M6 - DIN985	-	-	3	-
27.	1.353.318	Fitting - M14X1.5 /G3/8	-	-	6	-
28.	1.314.510	Fitting - 90deg. EVW 8 PL	-	-	2	-
29.	1.331.795	Hydraulic hose 1SNDN6-630	-	-	4	-
30.	1.353.204	Harness	-	-	1	-
31.	1.353.213	Switch 6FH 007 832-121 HELLA	-	-	1	-
-	1.379.399	Holder assy (item 7,12,16,17)				
-	1.379.472	Directional valve assy (24-31)				
-	1.379.473	Hydraulic multipoint kit. (2,6,8,9,10,11,13,14,15,16,19,20,21,22,32)				

31/A

Lubrication table

#	type	period	qty.
1	Liton EP2	250 [h]	look at the operator's manual
2	Liton EP2	250 [h]	look at the operator's manual
3	Liton EP2	50 [h]	look at the operator's manual
4	EP-00 grease	250 [h]	5,5 [pounds], 2,5 [kg]
5	Liton EP2	250 [h]	look at the operator's manual
6	Liton EP2	50 [h]	look at the operator's manual
7	Liton EP2	50 [h]	look at the operator's manual
8	Liton EP2	250 [h]	look at the operator's manual
9	Liton EP2	250 [h]	look at the operator's manual
10	Gearbox oil	50 [h]	look at the operator's manual
11	Gearbox oil	10 [h]	look at the operator's manual
12	SAE 80W-140	50 [h]	10,15 [fl.oz.]; 0,3[l]
13	SAE 80W-140	250 [h]	30,45 [fl.oz.]; 0,9 [l]

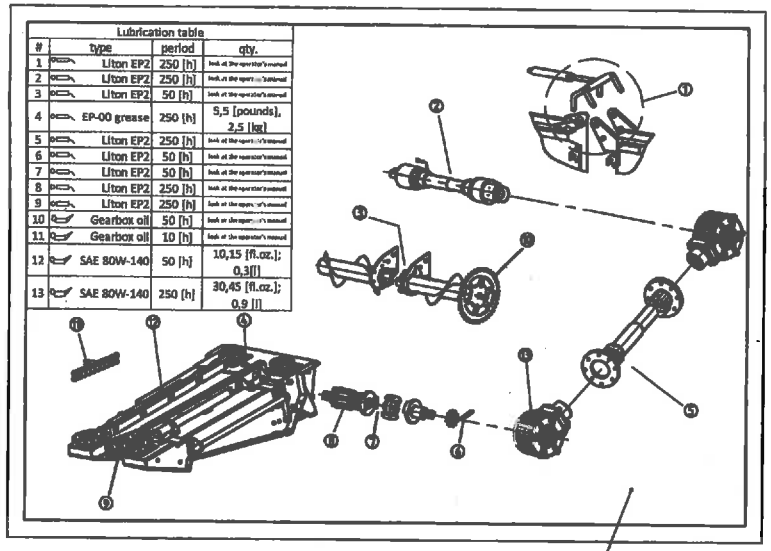

1

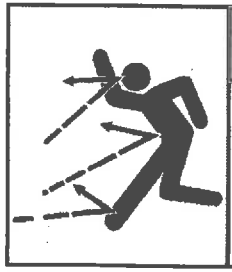

WARNING

Stay clear of discharge when engine is running.

2

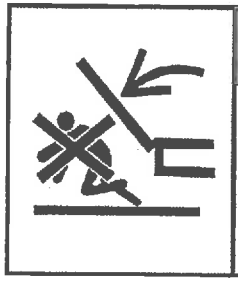

WARNING

Stay clear of the wings when corn head is being folded or un-folded.

4

3

DANGER

Stop engine before unclogging. Header takes in crop faster than you can let go.

WARNING

To ensure adequate clearance always lower header before folding wings.

11

WARNING

Do not operate feeder lateral tilt feature with this Cornhead Damage may result!

12

WARNING

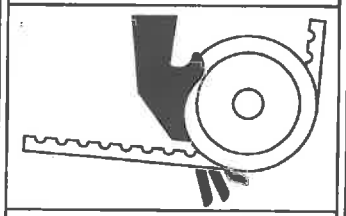

Do not open until engine and all movement have stopped.

5

DANGER

CONTACT WITH ROTATING DRIVELINE CAN CAUSE DEATH

Do not operate without
- all driveline shields in place.
- both driveline ends securely attached.
- driveline shield rotating freely & restraints properly attached

6

DANGER

Stop engine before unclogging or making any adjustments.

7

DANGER

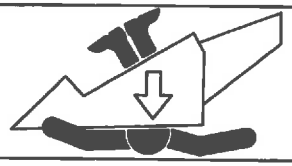

Engage feeder lift cylinder safety stop before going under header or feeder.

8

WARNING

Stop engine and wait for all movement to stop before servicing chopper.

9

10

2016

LABELS - WARNING

Ref.	Part Number	Description	Rigid models	Folding models
1.	1.377.253	Lubricating label	1	1
2.	1.353.431	Warning label - chopper models only	2	2
3.	111671 W1	Warning label	2	2
4.	1.353.432	Warning label - folding models only	-	4
5.	111670 W1	Warning label	2	2
6.	111672 W1	Warning label	2	2
7.	111096 W1	Warning label	2	2
8.	111095 W1	Warning label	4	4
9.	1.353.433	Warning label - chopper models only	2	2
10.	1.304.921	Reflective strip, amber	2	2
10.	1.304.922	Reflective strip, red	2	2
10.	1.327.130	Reflective strip, orange	2	2
11.	1.355.485	Warning label - folding models only	-	2
12.	1.379.138	Warning label	-	1

32

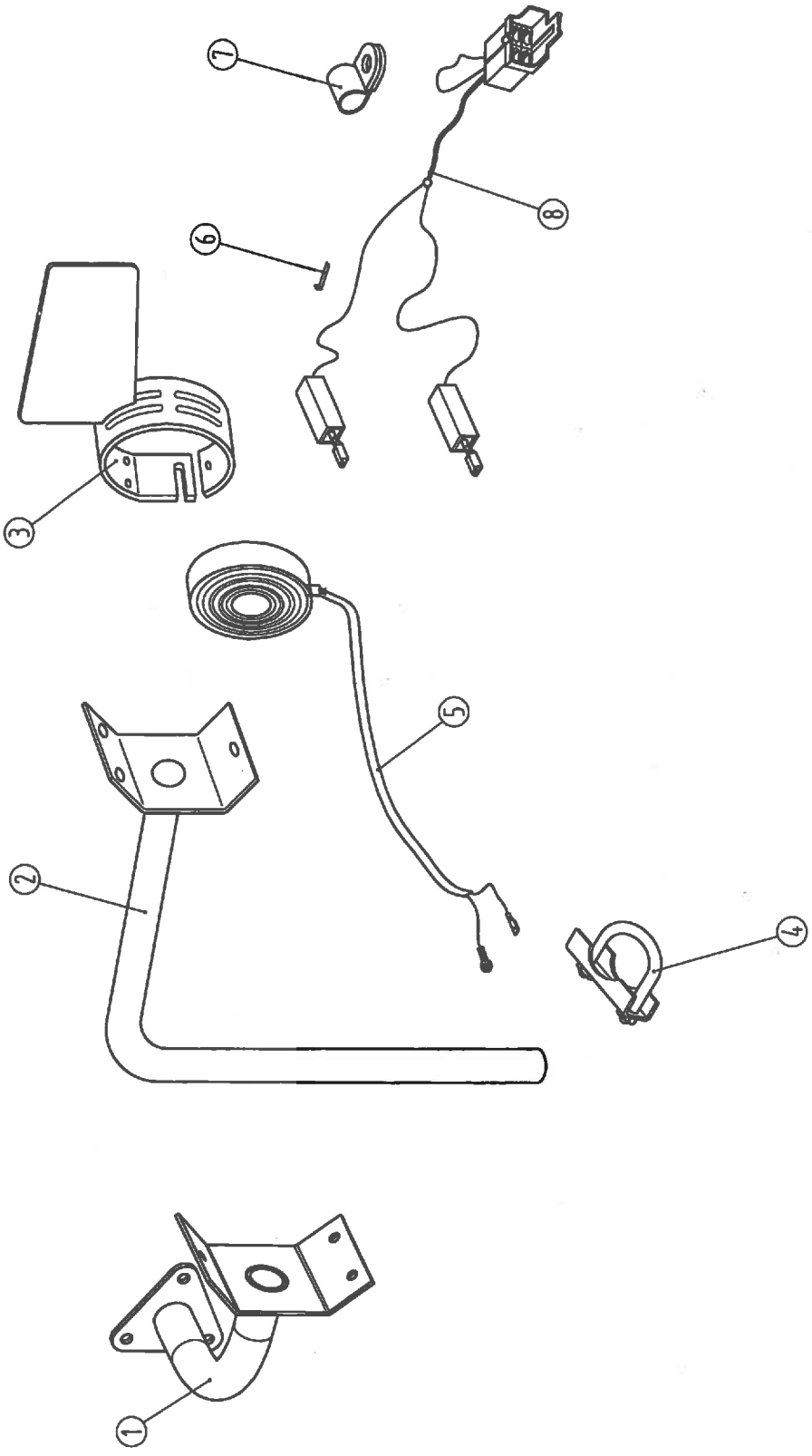

2015

LIGHTING

Ref.	Part Number	Description		6306	6308 70	6108 6208 6308	6112 6212 6312 6316	6306F 70	6306F	6308F	6309F	6312F
1.	1.379.105	Lamp - bracket		-	-	-	-	2	2	2	2	2
2.	1.321.217	Lamp - bracket		2	2	2	2	-	-	-	-	-
3.	1.327.127	Shield		2	2	2	2	2	2	2	2	2
4.	1.320.289	Retainer	→2013	4	4	4	4	-	-	-	-	-
4.	97517031100	Retainer	2014→	4	4	4	4	-	-	-	-	-
5.	99611171000	Lamp assy		2	2	2	2	2	2	2	2	2
6.	99652123700	Strap		2	2	2	2	2	2	2	2	2
7.	97324001370	Band		3	3	3	3	3	3	3	3	3
8.	1.320.072	Wire		1	1	1	-	1	1	1	1	1
8.	1.353.978	Wire		-	-	-	1	-	-	-	-	-

1.329.165

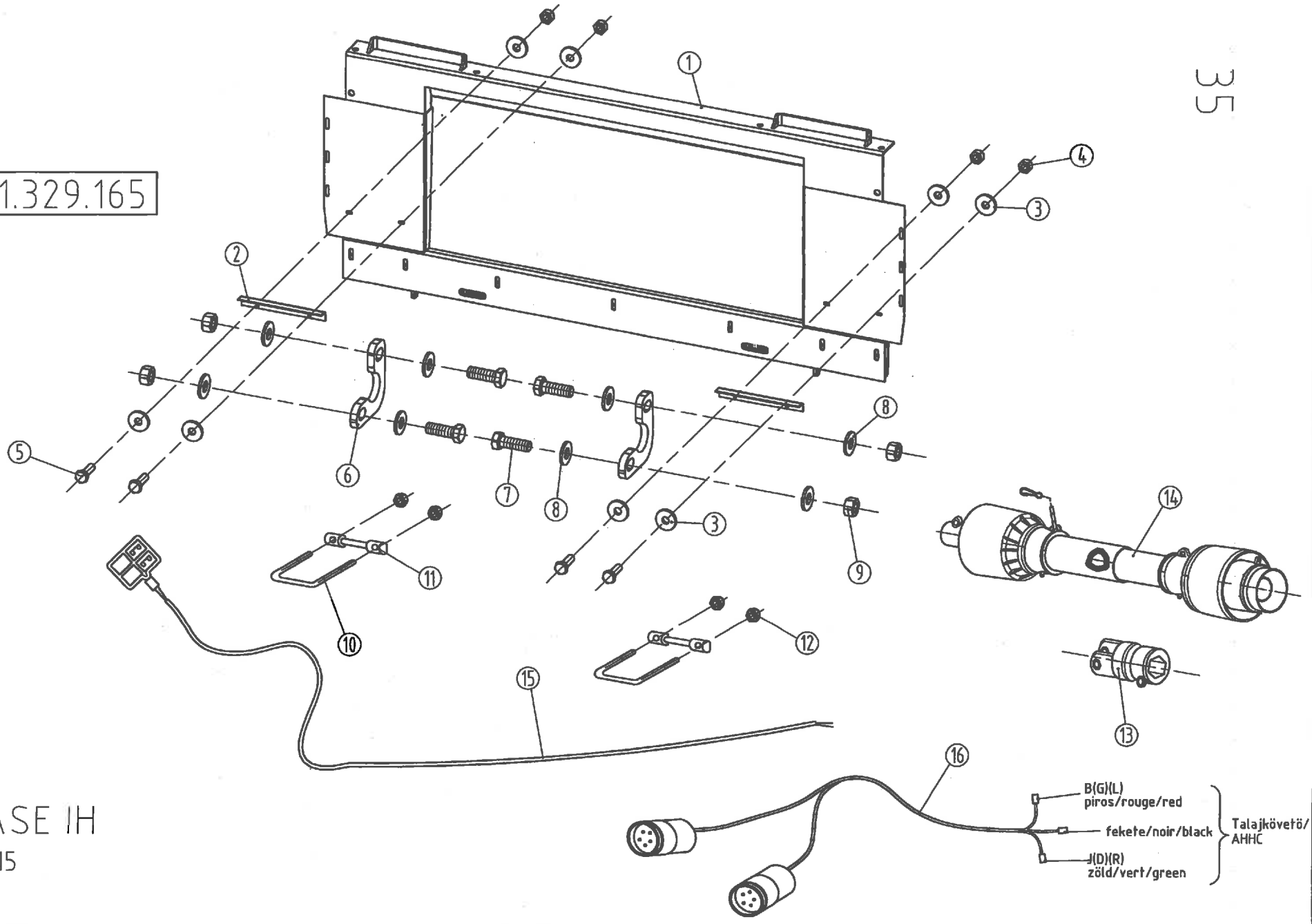

CASE IH

2015

MOUNTING KIT: CASE IH (→2500 series combines, 2008→)

Ref.	Part Number	Description	6-8R	12-16R
1.	1.329.166	Frame assy	1	1
2.	1.320.558	Angle	2	2
3.	1.314.099	Washer	8	8
4.	70708000066	Lock nut M8 - DIN980	10	10
5.	79408002566	Hex bolt M8x25 - DIN933/8.8	10	10
6.	1.329.977	Clip plate	2	2
7.	79412003566	Hex bolt M12x35 - DIN933	4	4
8.	91623938961	Spring washer - A12	8	8
9.	73512000066	Hex nut M12 - DN934	4	4
10.	1.301.068	Retainer	2	2
11.	1.301.069	Pin	2	2
12.	70716000066	Lock nut M16 - DIN980	4	4
13.	1.327.664	Yoke - 1.125 hex (P400)	2	-
13.	1.327.487	Kardánvilla - 1.125 hex (P500)	-	2
14.	-	PTO drive shaft	See page 1!	See page 1!
15.	1.327.638	Wire	1	1
16.	1.379.536	Harness	1	1

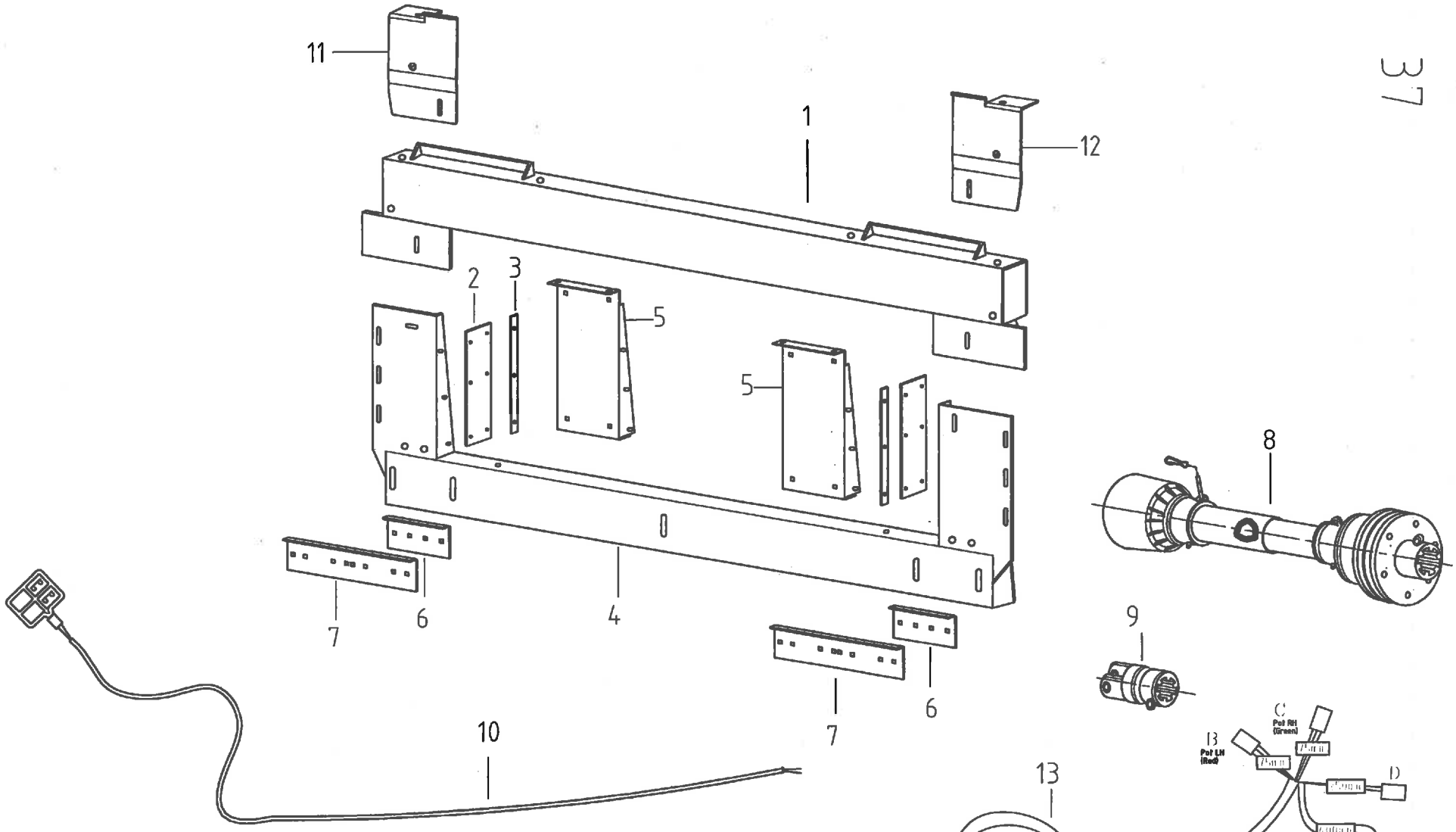

MF 8680,8780,9690,9790
Gleaner C, A
2013

MOUNTING KIT: MF 8680, Gleaner C, 8780, 9690, 9790,CHALLENGER

Ref.	Part Number	Description		6-8R	12-16R
1.	1.322.351	Upper filler - without LTM		1	1
2.	1.328.546	Rubber plate		2	2
3.	1.320.280	Flat iron		2	2
4.	1.322.329	Lower filler		1	1
5.	71 38 50 03	Inlet MF 8780		2	2
6.	1.322.332	Angle MF 8680, Gleaner C		2	2
7.	1.322.333	Angle MF 8780, 9690, 9790		2	2
8.	-	PTO drive shaft		See page 1!	See page 1!
9.	1.327.662	Yoke - 21spline (P400)		2	-
9.	1.327.486	Yoke - 21spline (P500)		-	2
10.	1.327.638	Wire		1	1
11.	1.332.447	Guide welded - right - with LTM		1	1
11.	1.332.462	Guide welded - right - with LTM Agco Challenger		1	1
12.	1.332.446	Guide welded - left - with LTM		1	1
12.	1.332.461	Guide welded - left - with LTM Agco Challenger		1	1
13.	1.355.966	Harness for AGCO multi-coupler		1	1

39

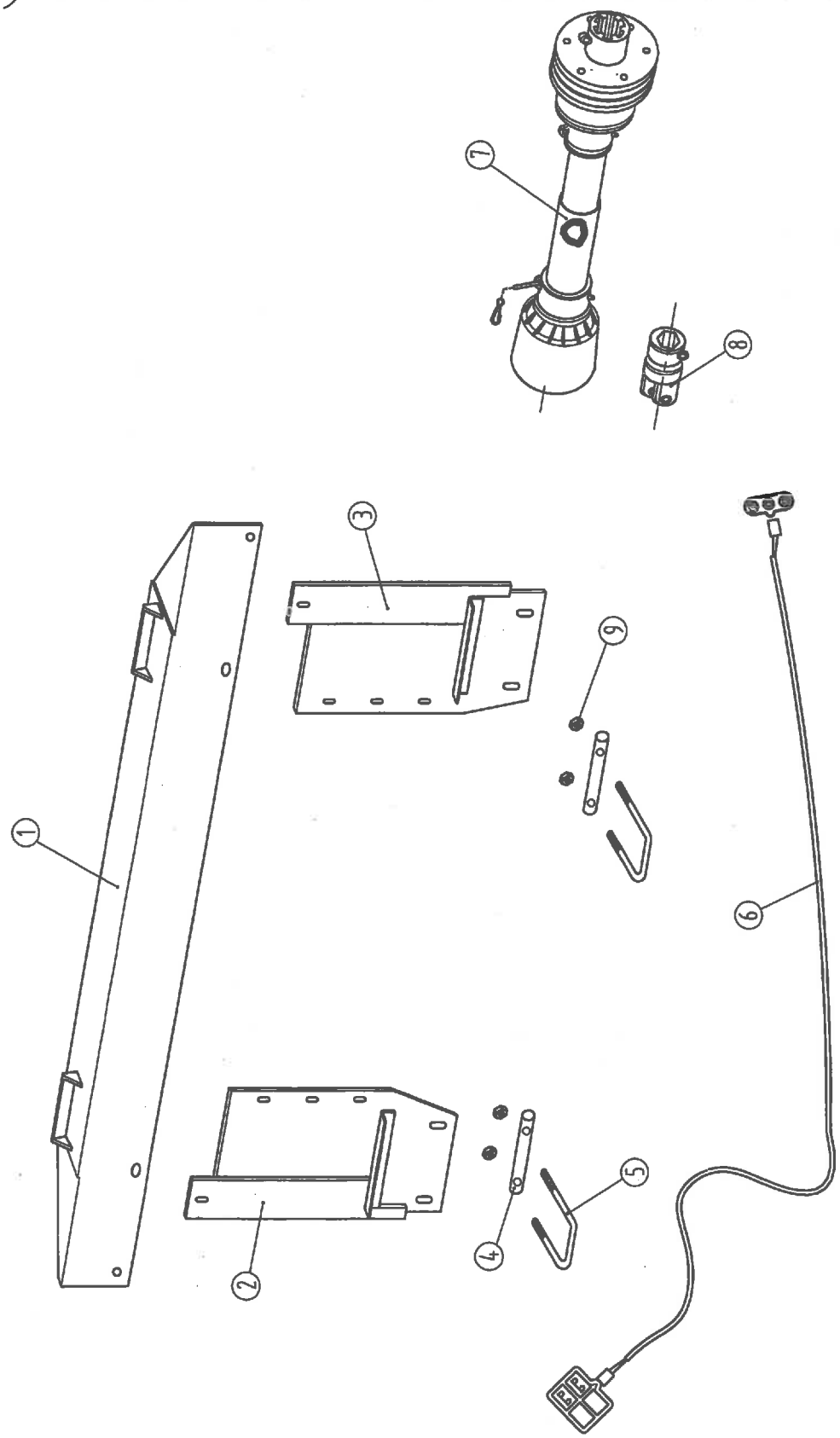

MF 8570

2007

MOUNTING KIT: MF 8570

Ref.	Part Number	Description	6306	6308
1.	1.320.291	Upper filler assy.	1	1
2.	1.322.394	Inlet weld. - RH	1	1
3.	1.322.393	Inlet weld. - LH	1	1
4.	1.304.985	Pin	2	2
5.	1.304.143	Retainer	2	2
6.	1.320.275	Wire	1	1
7.	-	PTO drive shaft (See page 1!)		
8.	1.353.755	Yoke - 1.26 hex (P400)	2	2
9.	70716000066	Lock nut M16 - DIN980	4	4

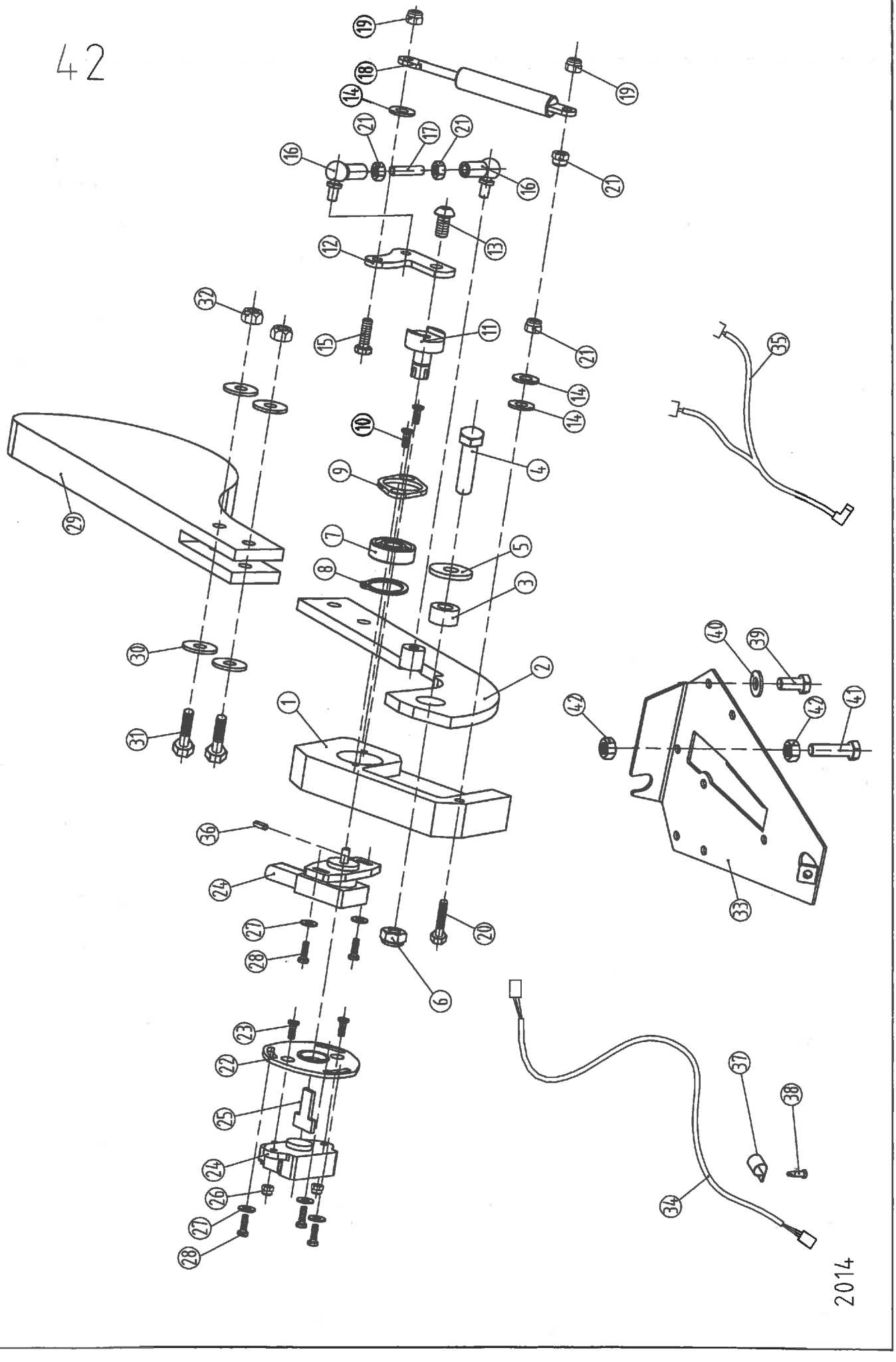
42
2014

AUTOMATIC HEADER HEIGHT CONTROL

Ref.	Part Number	Description		2 sensors	3 sensors
1.	1.329.455	Block		2	3
2.	1.329.462	Arm assy.		2	3
3.	1.301.766	Bushing		2	3
4.	79410004566	Hex bolt M10x45 - DIN933/8.8		2	3
5.	96702375920	Washer - M10		2	3
6.	70710000066	Lock nut - M10 - DIN980		2	3
7.	87000620114	Bearing - 6201- 2RS		2	3
8.	70200001201	Retaining ring - external 12x1 - DIN471		2	3
9.	1.329.458	Cover plate		2	3
10.	80405001603	Hex socket countersunk-head bolt M5x16 - DIN7991/10.9		4	6
11.	1.329.457	Shaft		2	3
12.	1.329.459	Arm		2	3
13.	81108001663	Hex socket button-head bolt- M8x16 - ISO7380/10.9		2	3
14.	71406000060	Washer -M6 - DIN125		6	9
15.	79406002066	Hex bolt -M6x20 - DIN933/8.8		2	3
16.	97515182510	Globe joint		4	6
17.	1.329.539	Rod		2	3
18.	96716250085	Gas spring		2	3
19.	74906000066	Hex nut - plastic insert -M6 - DIN985		4	6
20.	79406005066	Hex bolt -M6x50 - DIN933/8.8		2	3
21.	73506000066	Hex nut -M6 DIN934		8	12
22.	1.332.078	Plate -CNH	→2014.	2	3
22.	1.332.078	Plate - Case 1000-2000		-	3
23.	80404001266	Hex socket countersunk-head bolt M4x12 - DIN7991/8.8 - CNH	→2014.	4	6
23.	80404001266	Hex socket countersunk-head bolt M4x12 - DIN7991/8.8 - Case 1000-2000		-	6
24.	96799585520	Rotation detector - Claas Lexion	→2013.	2	3
24.	60042406090	Rotation detector - JD, MF AGCO, CLAAS, CNH 2015.→		2	3
24.	91601111000	Rotation detector - CNH	→2014.	2	3
24.	91601111000	Rotation detector - Case 1000-2000		-	3
25.	1.329.910	Driver for 91601111000 - CNH	→2014.	2	3
25.	1.329.910	Driver for 91601111000 - Case 1000-2000		-	3
26.	74904000066	Hex nut - plastic insert M4 - DIN985 - CNH	→2014.	4	6
26.	74904000066	Hex nut - plastic insert M4 - DIN985 - Case 1000-2000		-	6
27.	71404000060	Washer M4 - DIN125		6	9
28.	79404001666	Hex bolt M4x16 - DIN933/8.8		6	9
29.	1.329.463	Ground contour copier		2	3
30.	1.314.099	Washer		8	12
31.	79408003566	Hex bolt -M8x35 - DIN933/8.8		4	6
32.	74908000066	Hex nut - plastic insert M8 - DIN985		4	6
33.	1.329.543	Bracket		2	3
33.	1.373.130	Bracket 20-22"		2	3
33.	1.372.285	Bracket - 60 cm		2	3
34.	1.329.906	Wire - l=3000 JD, CNH, MF AGCO, Case 1000-2000		1	1
34.	1.329.907	Wire - l=5500 JD, CNH, MF AGCO, Case 1000-2000		1	1
34.	1.329.908	Wire - l=850 - Claas Lexion, JD, MF AGCO, CNH 2015.→		2	3
34.	1.329.909	Wire - l=850 - CNH	→2014.	2	3
34.	1.329.909	Wire - l=850 - Case 1000-2000		-	3
34.	1.329.541	Wire - l=1500		2	6
35.	96799674430	Harness Claas Lexion	→2013.	1	1
35.	1.332.459	Harness Claas Lexion	2014.→	1	1
35.	1.379.536	Harness Case 1000-2000	2014.→	1	1
36.	73002001601	Roll pin - 2x16 - DIN1481		2	3
37.	97327001370	Clamp		10	15
38.	81303501366	Self cutting hex bolt - M5x13 DIN7540		10	15
39.	79408001666	Hex bolt -M8x16 - DIN933/8.8		8	12
40.	91623938761	Washer A8		8	12
41.	79408005066	Hex bolt -M8x50 - DIN933/8.8		2	3
42.	73508000066	Hex nut -M8 DIN934		4	6

43/A

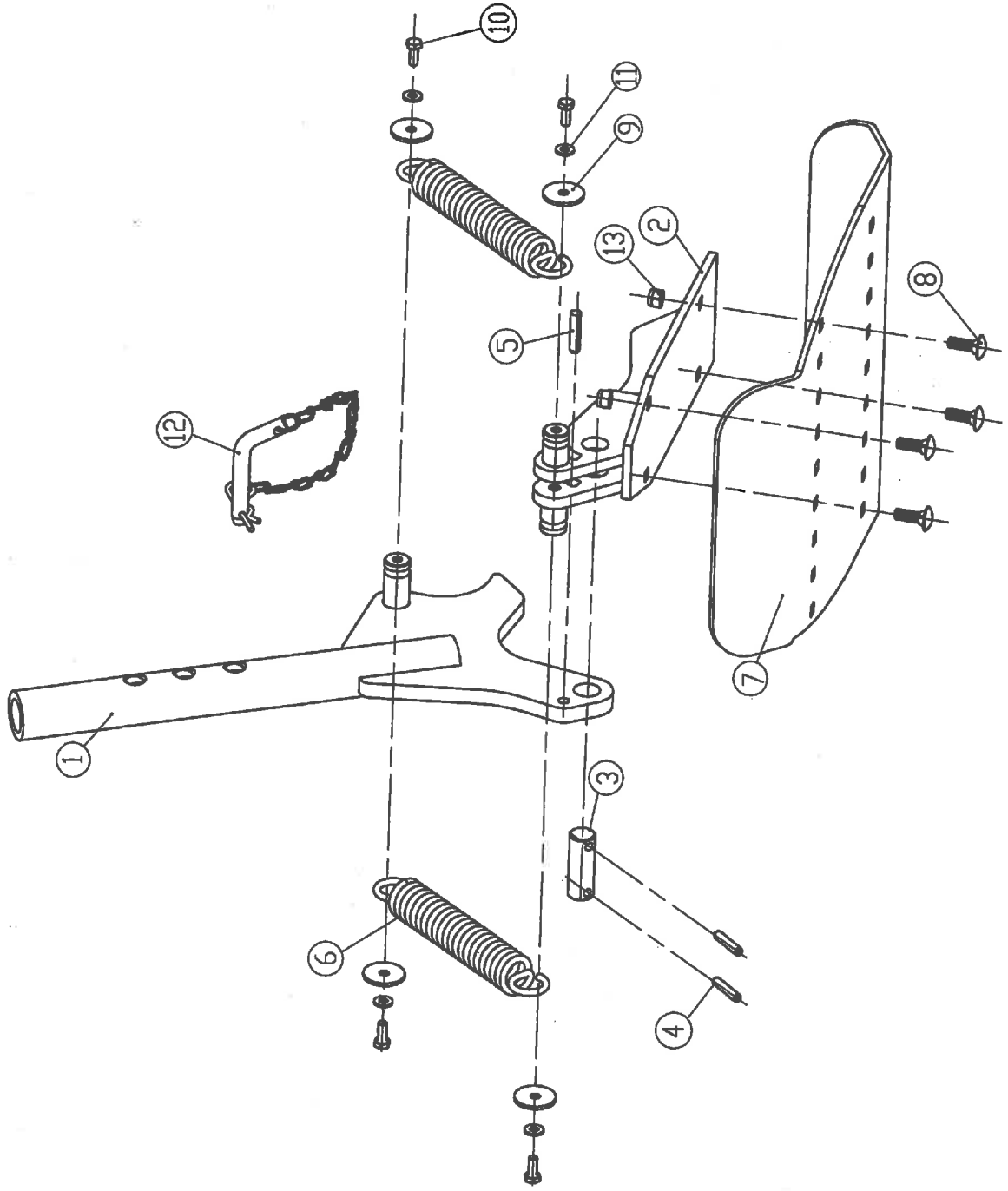

1.378.492

2013

STALK STOMPER

Ref	Part Number	Description		All models
1.	1.378.493	Support assy		2
2.	1.378.497	Body		2
3.	1.356.016	Pin		2
4.	73108004001	Roll pin 8x40 - DIN1473		4
5.	73100104501	Spring pin 10x45 - ISO 28739		2
6.	1.200.628	Spring		4
7.	1.378.501	Stomper plate		2
8.	76310003066	Carriage bolt M10x30 - DIN603/8.8		8
9.	1.377.699	Washer		8
10.	79408002066	Hex bolt M8x20 - DIN933/8.8		8
11.	91623938761	Spring washer M8		8
12.	1.378.446	Safety pin		2
13.	74901000066	Hex nut - plastic insert M10 - DIN985		8

45

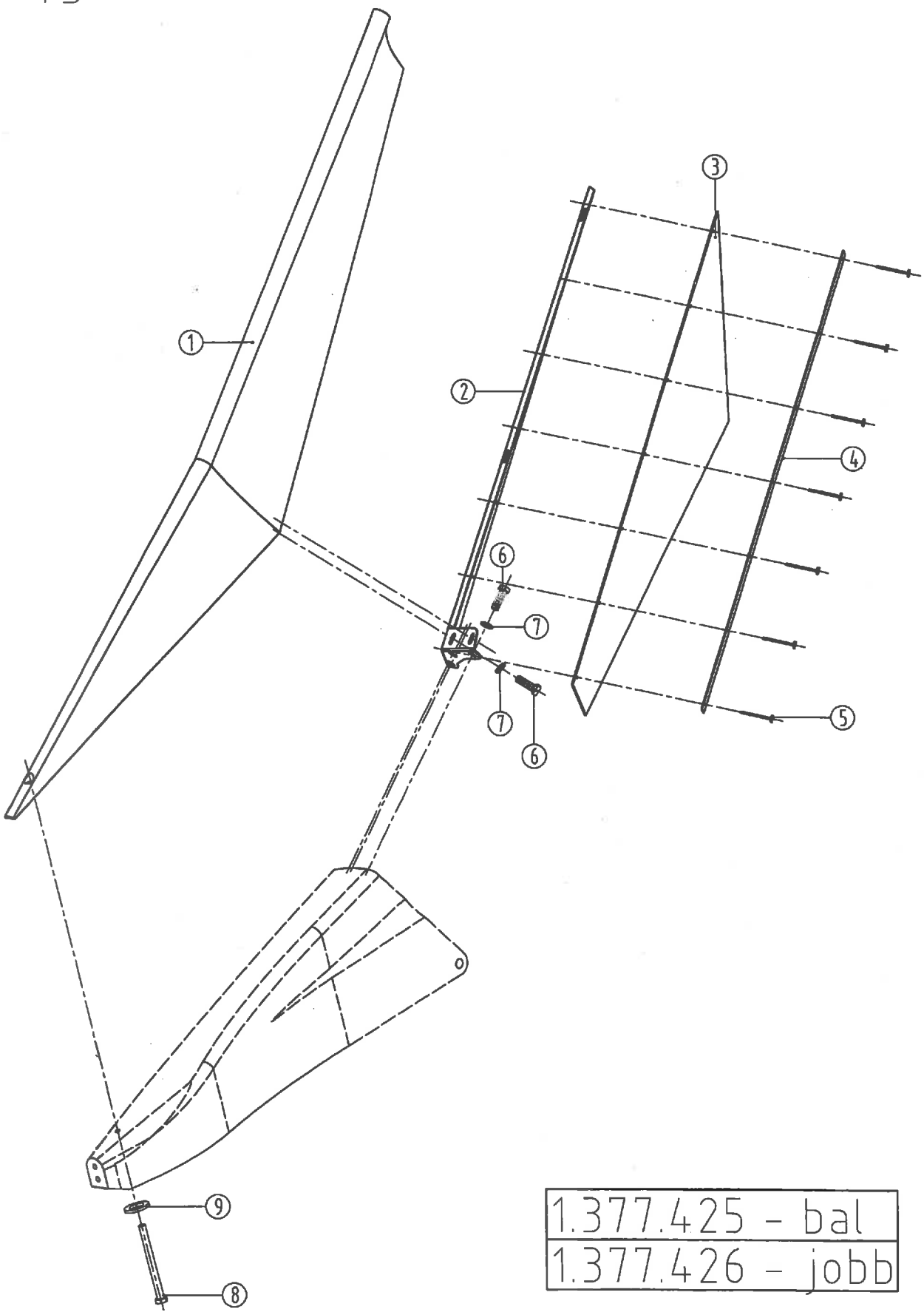

1.377.425 - bal
1.377.426 - jobb

2013

SIDE EXTENSION

Ref.	Part Number	Description	All models
1.	1.377.382	Side extension - LH white	1
1.	1.377.382.1	Side extension - LH red	1
1.	1.377.382.2	Side extension - LH yellow	1
1.	1.377.382.3	Side extension - LH JD green	1
1.	1.377.382.4	Side extension - LH orange	1
1.	1.377.382.5	Side extension - LH Claas green	1
1.	1.377.382.6	Side extension - LH SDF green	1
1.	1.377.382.10	Side extension - LH chassis grey	1
1.	1.377.383	Side extension - RH white	1
1.	1.377.383.1	Side extension - RH red	1
1.	1.377.383.2	Side extension - RH yellow	1
1.	1.377.383.3	Side extension - RH JD green	1
1.	1.377.383.4	Side extension - RH orange	1
1.	1.377.383.5	Side extension - RH Claas green	1
1.	1.377.383.6	Side extension - RH SDF green	1
1.	1.377.383.10	Side extension - RH chassis grey	1
2.	1.377.432	Support - LH	1
2.	1.377.433	Support - RH	1
3.	1.377.429	Rubber curtain	2
4.	1.377.428	Flat bar	2
5.	84304001200	POP rivet 4x12 - DIN7337	16
6.	79408002066	Hex bolt M8x20 - DIN933/8.8	14
7.	91623938761	Spring washer M8	14
8.	79408010066	Hex bolt M8x100 - DIN933/8.8	2
9.	1.314.099	Washer	2

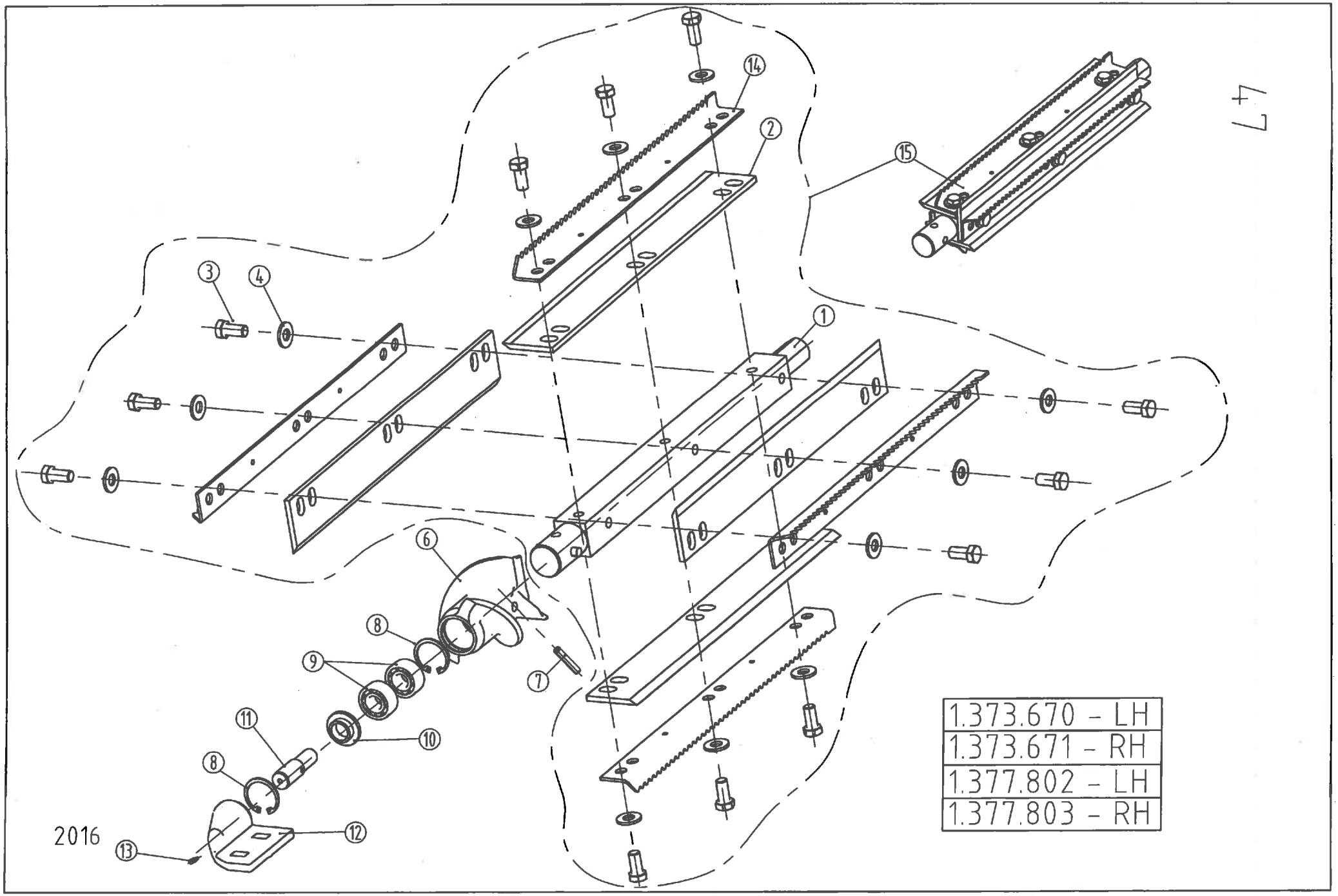

1.373.670 - LH
1.373.671 - RH
1.377.802 - LH
1.377.803 - RH

SNAPPING KNIFE-ROLL

Ref.	Part Number	Description		6 row	8 row	9 row	12 row	16 row
1.	1.377.247	Snapping roll body		12	16	19	24	32
2.	1.377.250	Knife		48	64	76	96	128
3.	79412125256	Hex bolt M12x25x1.25 - DIN961		144	192	228	288	384
4.	91623938961	Spring washer - A12		144	192	216	288	384
6.	1.377.800	Auger - LH	→2015	6	8	9	12	16
6.	1.377.801	Auger - RH	→2015	6	8	9	12	16
6.	1.379.973	Auger - LH	2016→	6	8	9	12	16
6.	1.379.974	Auger - RH	2016→	6	8	9	12	16
7.	73010005501	Spring pin 10x55 - DIN1481		12	16	18	24	32
7.	73006005501	Spring pin 6x55 - DIN1481		12	16	18	24	32
7.	73100105501	Pin 10x65 - DIN28739		12	16	18	24	32
8.	70100004001	Retaining ring - internal 40x1.75 - DIN472		24	32	36	48	64
9.	87000420314	Bearing 4203 - DIN625	→2015	24	32	36	48	64
9.	87000320314	Bearing 3203 2RS	2016→	24	32	36	48	64
10.	1.377.392	Spacer		12	16	18	24	32
11.	1.377.393	Shaft		12	16	18	24	32
12.	1.377.297	Bearing housing - LH		6	8	9	12	16
12.	1.377.298	Bearing housing - RH		6	8	9	12	16
13.	70006011860	Grease fitting 6x1x180° - DIN71412		12	16	18	24	32
14.	1.378.440	Flute - LH		24	32	36	48	64
14.	1.378.441	Flute -RH		24	32	36	48	64
15.	1.379.779	Snapping roll pre-assy.-LH		12	16	19	24	32
15.	1.379.780	Snapping roll pre-assy.-RH		12	16	19	24	32

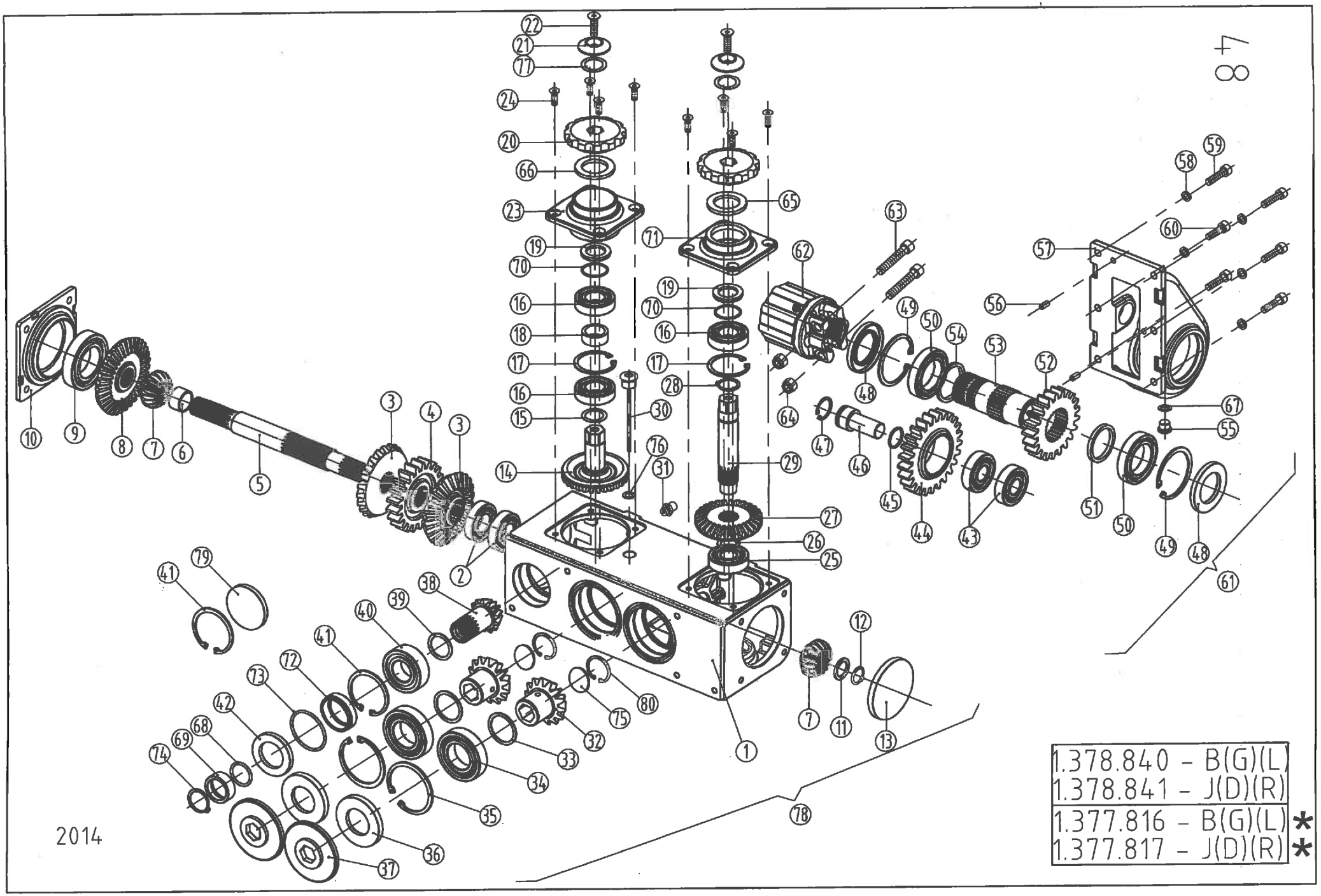

1.378.840 - B(G)(L)
1.378.841 - J(D)(R)
1.377.816 - B(G)(L) *
1.377.817 - J(D)(R) *

2014

SNAPPING UNIT GEARBOX
FOR KNIFE-ROLL ROW UNIT

Ref.	Part Number	Description		6R	8R	9R	12R	16R
56.	1.375.746	Dowel pin		12	16	18	24	32
57.	1.375.723	Gearbox housing		6	8	9	12	16
58.	71810000060	Spring washer M10 - DIN7980		36	48	54	72	96
59.	80210004063	Hex socket head cap bolt M10x40 - DIN912/10.9		30	40	45	60	80
60.	80210003563	Hex socket head cap bolt M10x35 - DIN912/10.9		6	8	9	12	16
61.	1.375.955	Gearbox assy - LH		6	8	9	12	16
61.	1.375.717	Gearbox assy - RH		6	8	9	12	16
62.	1.375.025	Safety clutch (Walterscheid)		6	8	9	12	16
63.	80212006566	Hex socket head cap bolt M12x65 - DIN912/8.8		12	16	18	24	32
64.	74901200066	Hex nut - plastic insert M12 - DIN982		12	16	18	24	32
65.	85804055007	Seal 40x55x7 - DIN3760-AS		6	8	9	12	16
66.	85804006208	Seal 40x62x7 - DIN3760-AS		6	8	9	12	16
67.	05200001600	Copper washer M16 - DIN7603		6	8	9	12	16
68.*	63003503500	O-ring 35x3.5		6	8	9	12	16
69.*	1.375.744	Spacer		6	8	9	12	16
70.	63003030010	O-ring 30x3		12	16	18	24	32
71.	1.377.732	Bearing housing - LH		6	8	9	12	16
72.*	1.377.775	Guide ring		6	8	9	12	16
73.*	63007151500	O-ring 71.5x1.5		6	8	9	12	16
74.*	70200003501	Retaining ring - external 35x1.5 - DIN471		6	8	9	12	16
75.	85803200500	Seal 32x5 NBR		12	16	18	24	32
76.	05200200024	Copper washer 20x24 - DIN7603		6	8	9	12	16
77.	71619026020	Shim 19x26x0,2- DIN988		12	16	18	24	32
77.	71619026050	Shim 19x26x0,5-DIN988		12	16	18	24	32
77.	71619026120	Shim 19x26x1,2-DIN988		12	16	18	24	32
78.	1.379.709	Gearbox sub - assy		6	8	9	12	16
78.	1.379.710	Gearbox sub - assy, no chopper		6	8	9	12	16
79.	85807201000	Seal NBR 72x10, no chopper		6	8	9	12	16
80.	70100003201	Retaining ring - internal 32x1.2 - DIN472	2015→	12	16	18	24	32

Note: application of shims depends on the backlash of the gears.
The items marked with * are for machines with chopper only!

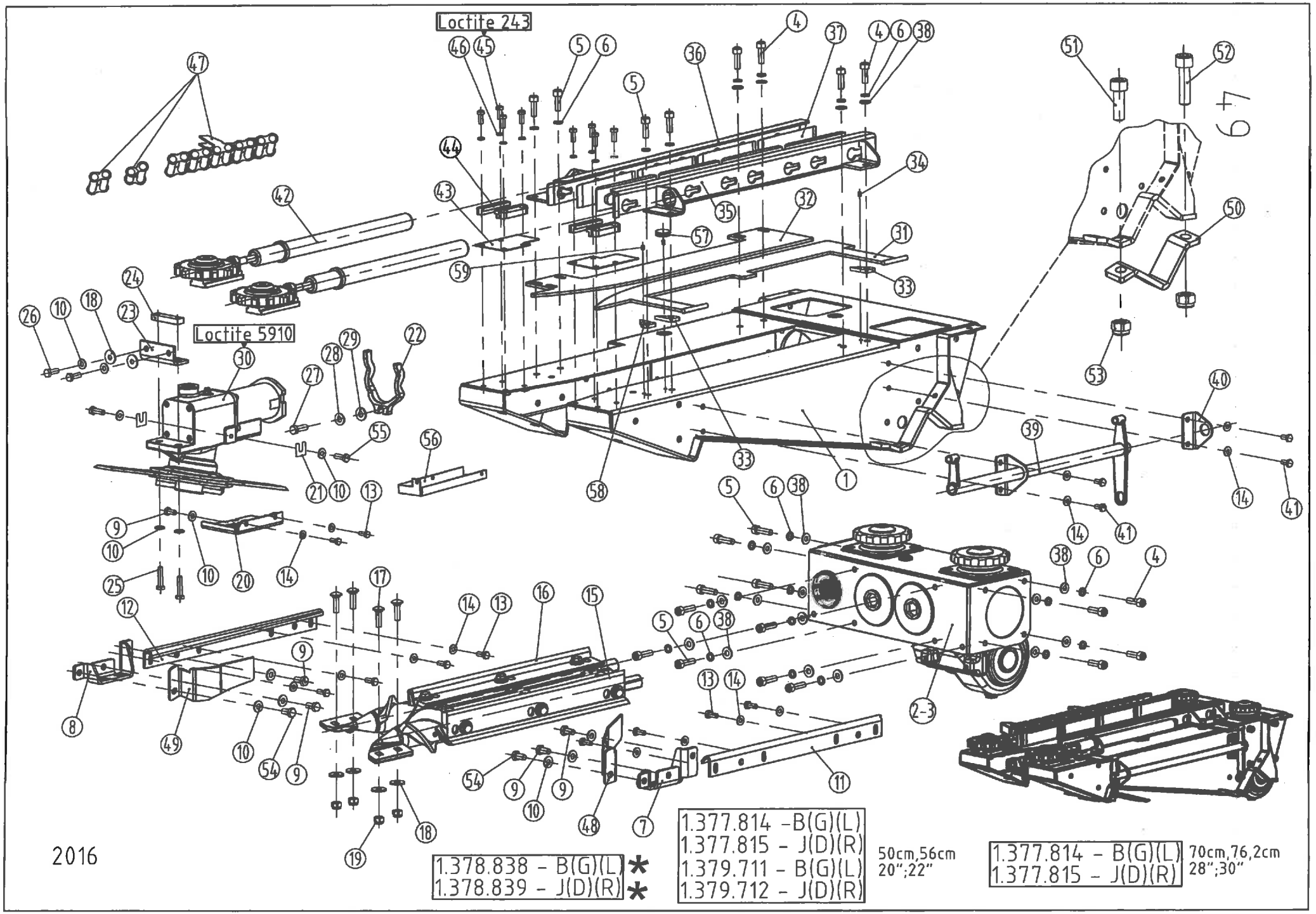
Loctite 243
Loctite 5910
67
2016
1.378.838 - B(G)(L) *
1.378.839 - J(D)(R) *
1.377.814 -B(G)(L)
1.377.815 - J(D)(R)
1.379.711 - B(G)(L)
1.379.712 - J(D)(R)
50cm,56cm
20";22"
1.377.814 - B(G)(L)
1.377.815 - J(D)(R)
70cm,76,2cm
28";30"

SNAPPING UNIT
WITH KNIFE ROLLS

Ref.	Part Number	Description		6306	6108 6208	6308	6309	6112 6212	6312	6316
1.	1.377.754	Frame assy	→2015	6	8	8	9	12	12	16
1.	1.373.426	Frame assy	2016→	6	8	8	9	12	12	16
2.	1.377.816	Gearbox - RH		3	4	4	4	6	6	8
3.	1.377.817	Gearbox - LH		3	4	4	4	6	6	8
4.	80210003063	Hex socket head cap bolt M10x30 - DIN912/10.9		42	56	56	63	84	84	112
5.	80210003563	Hex socket head cap bolt M10x35 - DIN912/10.9		84	112	112	126	168	168	224
6.	71810000060	Spring washer M10 - DIN7980		126	168	168	189	252	252	336
7.	1.375.800	Support - LH		6	8	8	9	12	12	16
8.	1.375.801	Support - RH		6	8	8	9	12	12	16
9.	79410002066	Hex bolt M10x20 - DIN933/8.8		30	40	40	45	60	60	80
10.	91623938861	Spring washer - A10		78	104	104	117	156	156	208
11.	1.377.267	Clearing knife - LH		6	8	8	9	12	12	16
12.	1.377.266	Clearing knife - RH		6	8	8	9	12	12	16
13.	79408001866	Hex bolt M8x18 - DIN933/8.8		60	80	80	90	120	120	160
14.	91623938761	Spring washer - A8		84	112	112	126	168	168	224
15.	1.377.803	Snapping roll - LH	→2015	6	8	8	9	12	12	16
15.	1.373.670	Snapping roll - LH	2016→	6	8	8	9	12	12	16
16.	1.377.802	Snapping roll - RH	→2015	6	8	8	9	12	12	16
16.	1.373.671	Snapping roll - RH	2016→	6	8	8	9	12	12	16
-	ARALUB HLP-2	Lubricating grease								
17.	76310003566	Carriage bolt M10x35 - DIN603/8.8		24	32	32	36	48	48	64
18.	96702375920	Washer M10		36	48	48	54	72	72	96
19.	70710000066	Lock nut M10 - DIN980		24	32	32	36	48	48	64
20.	1.377.793	Cover plate		6	8	8	9	12	12	16
21.	1.377.990	Shimming plate		24	32	32	36	48	48	64
22.	1.377.788	Fixing fork		6	8	8	9	12	12	16
23.	1.377.791	Angle		6	8	8	9	12	12	16
24.	1.378.178	Flat		6	8	8	9	12	12	16
25.	79410004566	Hex bolt M10x45 - DIN933/8.8		12	16	16	18	24	24	32
26.	79410003066	Hex bolt M10x30 - DIN933/8.8		12	16	16	18	24	24	32
27.	79412003566	Hex bolt M12x35 - DIN933/8.8		6	8	8	9	12	12	16
28.	91623938961	Spring washer - A12		6	8	8	9	12	12	16
29.	1.377.251	Washer		6	8	8	9	12	12	16
30.	1.377.762	Stalk chopper assy		6	4	8	9	6	12	16
30.	1.379.707	Stalk chopper assy**	2014→	-	4	-	-	6	-	-
-	Loctite 5910	RTV silicone								
31.	1.378.472	Snapping plate - LH	→2015	6	8	8	9	12	12	16
31.	1.373.738	Snapping plate - LH	2016→	6	8	8	9	12	12	16
32.	1.378.474	Snapping plate - RH		6	8	8	9	12	12	16
33.	1.376.067	Washer		12	16	16	18	24	24	32
34.	73005000801	Spring pin 5x8		12	16	16	18	24	24	32
35.	1.377.983	Chain guide - LH	→2015	6	8	8	9	12	12	16
35.	1.373.734	Chain guide - LH	2016→	6	8	8	9	12	12	16
36.	1.377.984	Chain guide - RH		6	8	8	9	12	12	16
37.	1.377.088	Inset		48	64	64	72	96	96	128
38.	71410000060	Washer M10 - DIN 125		84	112	112	126	168	168	224
39.	1.375.813	Crank-arm assy		6	8	8	9	12	12	16
40.	1.377.989	Console		6	8	8	9	12	12	16
41.	79408002066	Hex bolt M8x20 - DIN933/8.8		24	32	32	36	48	48	64
42.	1.375.755	Chain adjuster assy		12	16	16	18	24	24	32
43.	1.375.832	Shimming plate		12	16	16	18	24	24	32
44.	1.375.833	Guide		24	32	32	36	48	48	64
45.	80308002062	Hex socket head cap bolt M8x20 - DIN6912/12.9		48	64	64	72	96	96	128
-	Loctite 243	Threadlocking agent								
46.	71808000060	Spring washer M8 - DIN7980	→2013	48	64	64	72	96	96	128
47.	1.326.221	Gathering chain (t=30mm, 36 pitches)		12	16	16	18	24	24	32
47.	84553333520	Offset link-30mm pitch (repairs only)		12	16	16	18	24	24	32
47.	84530000000	Connector link-30mm pitch (repairs only)		12	16	16	18	24	24	32
48.	1.377.398	Deflector plate - LH		6	8	8	9	12	12	16
49.	1.377.399	Deflector plate - RH		6	8	8	9	12	12	16
50.	1.375.947	Clamping bracket		12	16	16	18	24	24	32
51.	80214004566	Hex socket head cap bolt M14x45 - DIN912/8.8		12	16	16	18	24	24	32
52.	80214006566	Hex socket head cap bolt M14x65 - DIN912/8.8		12	16	16	18	24	24	32
53.	74901400066	Hex nut - plastic insert M14 - DIN982/8.		24	32	32	36	48	48	64

Note: the items marked with * are only valid for machines without a chopper!
Note: the item marked with ** are used at every second snapping unit from the right!

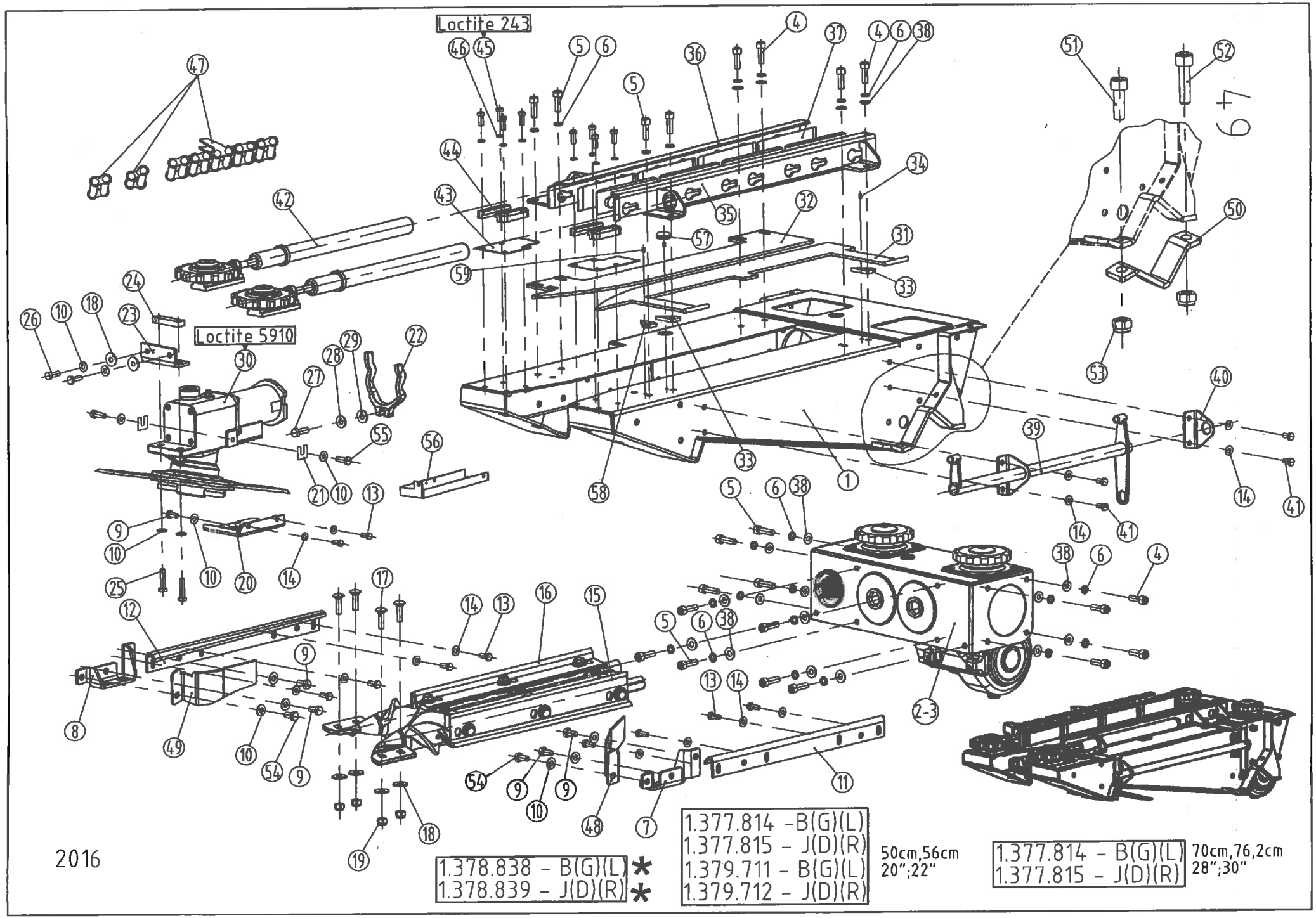

2016

1.378.838 - B(G)(L) *	
1.378.839 - J(D)(R) *	
1.377.814 -B(G)(L)	50cm,56cm 20";22"
1.377.815 - J(D)(R)	
1.379.711 - B(G)(L)	
1.379.712 - J(D)(R)	
1.377.814 - B(G)(L)	70cm,76,2cm 28";30"
1.377.815 - J(D)(R)	

SNAPPING UNIT
WITH KNIFE ROLLS

Ref.	Part Number	Description		6306	6108 6208	6308	6309	6112 6212	6312	6316
54.	79410002566	Hex bolt M10x25 - DIN933/8.8		12	16	16	18	24	24	32
55.	79410003063	Hex bolt M10x30 - DIN933/10.9		12	16	16	18	24	24	32
56.	1.379.075	Cover plate weld *		6	8	8	9	12	12	16
57.	96700000003	Rubber plug *		6	8	8	9	12	12	16
58.	1.373.740	Washer	2016→	6	8	8	9	12	12	16
59.	73005001601	Spring pin 5x16	2016→	6	8	8	9	12	12	16

Note: the items marked with * are only valid for machines without a chopper!
Note: the item marked with ** are used at every second snapping unit from the right!

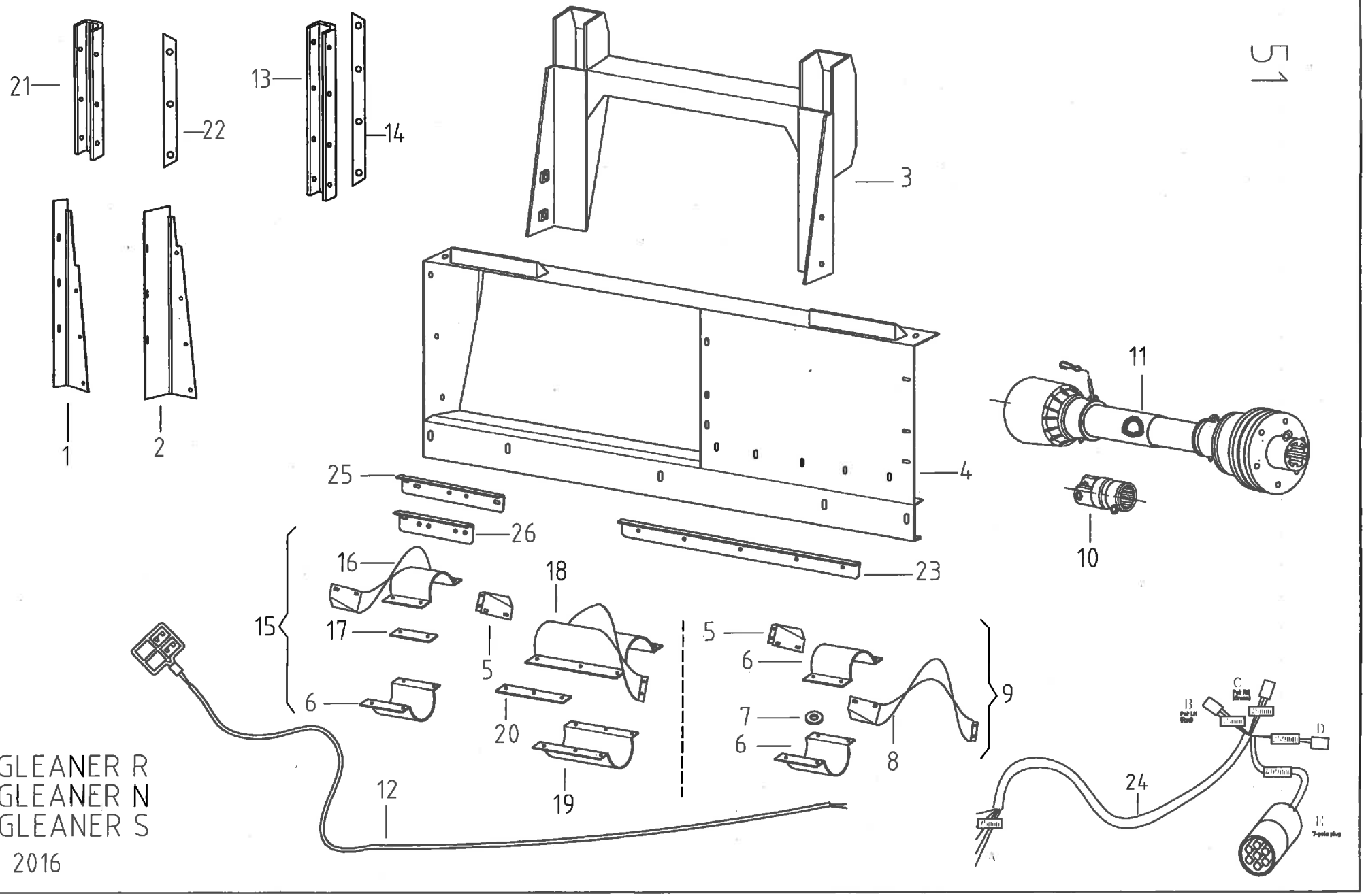
51
21
22
13
14
3
1
2
11
4
25
26
23
10
16
18
15
17
5
6
20
19
12
5
6
7
6
8
9
24
A
B
C
D
E
GLEANER R
GLEANER N
GLEANER S
2016

MOUNTING KIT: GLEANER "R"

Ref	Part No.	Description		6306	6308	6308F	6112	6312F	6212 6312 6316
1.	1.326.519	Blocking plate left – R62-R72		1	1	1	1	1	1
1.	1.326.520	Blocking plate right – R62-R72		1	1	1	1	1	1
2.	1.326.521	Blocking plate left – R42-R52		1	1	1	1	1	1
2.	1.326.522	Blocking plate right – R42-R52		1	1	1	1	1	1
3.	1.326.504	Filler welded – without LTM only		1	1	1	1	1	1
4.	1.326.507	Filler welded		1	1	1	1	1	1
5.	1.353.411	Auger flight extension right 22" pitch		1	1	1	1	1	1
6.	1.353.412	Half filler 22" pitch		2	2	2	2	3	3
7.	234.364.0	Washer		2	2	2	2	-	-
8.	1.353.409	Auger flight extension left weld.22"pitch		1	1	1	1	-	-
9.	1.353.413	Flight extension complete 22" pitch		1	1	1	1	-	-
10.	1.327.662	Yoke - 21spline (P400)		2	2	2	-	-	-
10.	1.327.486	Yoke - 21spline (P500)		-	-	-	2	2	2
11.	1.353.028	Cardan shaft See page 1.		1	-	-	-	-	-
12.	1.327.638	Wire		1	1	1	1	1	1
13.	1.328.540	Rubber plate		2	2	2	2	2	2
14.	1.328.541	Flat iron		2	2	2	2	2	2
15.	1.355.478	Flight extension complete 22" pitch		-	-	-	-	1	1
16.	1.355.473	Auger flight extension left weld.22"pitch		-	-	-	-	1	1
17.	1.355.553	Flat iron		-	-	-	-	2	2
18.	1.355.464	Auger flight extension left weld.22"pitch		-	-	-	-	1	1
19.	1.353.571	Half filler		-	-	-	-	1	1
20.	1.353.573	Flat iron		-	-	-	-	2	2
21.	1.355.920	Rubber plate		2	2	2	2	2	2
22.	1.355.921	Flat iron		2	2	2	2	2	2
23.	1.326.532	Cleaning angle	->2015	1	1	1	1	1	1
23.	1.326.532	Cleaning angle	2016 ->	1	1	1	1	1	1
24.	1.355.966	Harness for AGCO multicoupler		1	1	1	1	1	1
25.	1.332.781	Cleaning angle – R42-R52	->2015	1	1	1	1	1	1
25.	1.372.229	Cleaning angle – R42-R52	2016 ->	1	1	1	1	1	1
26.	1.332.782	Cleaning angle – R62-R72	->2015	1	1	1	1	1	1
26.	1.372.228	Cleaning angle – R62-R72	2016 ->	1	1	1	1	1	1

-1

-2

-3

-4

5- 6112

6- 6112 C

7- 6208

8- 6208 C

9- 6212

10- 6212 C

11- 6306

12- 6306C

13- 6308 C 70

14- 6208

15- 6308 F

16- 6308 C

17- 6308 F E

18- 6308 F E C

19- 6308 F E

20- 6312 C 70

21- 6312

22- 6312 F

23- 6312 C

24- 6312 FC

25- 6316 C

3

LABELS - MODEL

Ref	Part Number	Description	Rigid	Foldable
1.	1.378.935	Label HARVESTEC	2	2
2.	1.378.937	Label CORNADO	2	2
3.	1.378.936	Label HARVESTEC	2	4
4.	1.333.495	Label MADE BY OROS	2	2
5.	1.379.001	Label 6112	2	2
6.	1.379.002	Label 6112 C	2	2
7.	1.379.003	Label 6208	2	2
8.	1.379.004	Label 6208 C	2	2
9.	1.379.005	Label 6212	2	2
10.	1.379.006	Label 6212C	2	2
11.	1.379.007	Label 6306	2	2
12.	1.379.008	Label 6306 C	2	2
13.	1.379.009	Label 6308 C-70	2	2
14.	1.379.010	Label 6308	2	2
15.	1.379.011	Label 6308 F	2	2
16.	1.378.920	Label 6308 C	2	2
17.	1.379.013	Label 6308 FC	2	2
18.	1.379.297	Label 6308 FEC	2	2
19.	1.379.415	Label 6308 FE	2	2
20.	1.379.014	Label 6312 C-70	2	2
21.	1.379.015	Label 6312	2	2
22.	1.379.386	Label 6312 F	2	2
23.	1.378.847	Label 6312 C	2	2
24.	1.379.017	Label 6312 FC	2	2
25.	1.379.295	Label 6316 C	2	2

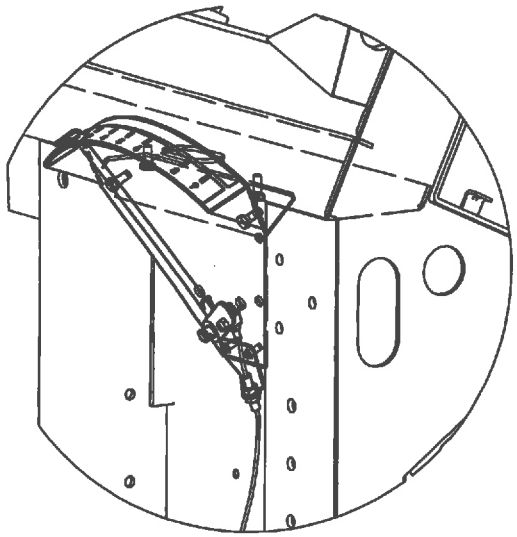

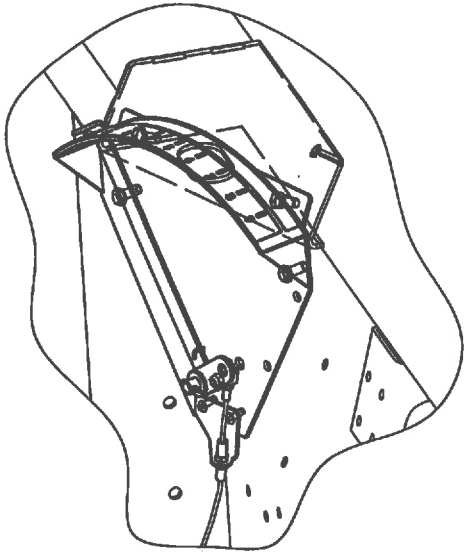

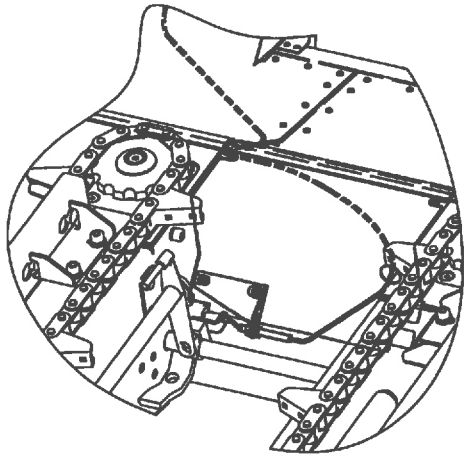

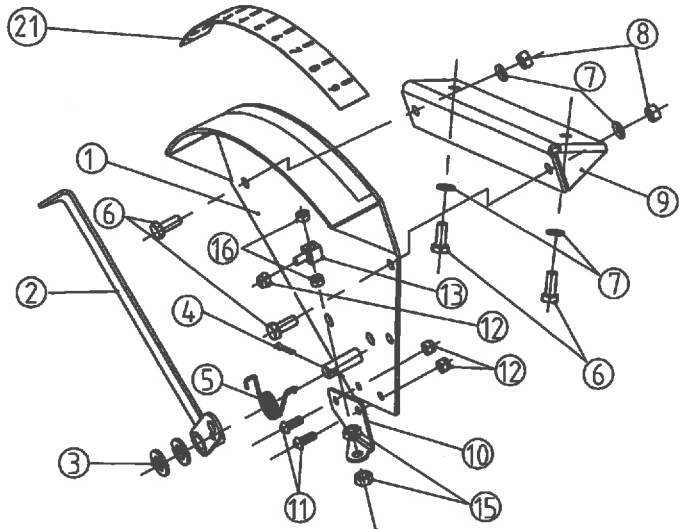

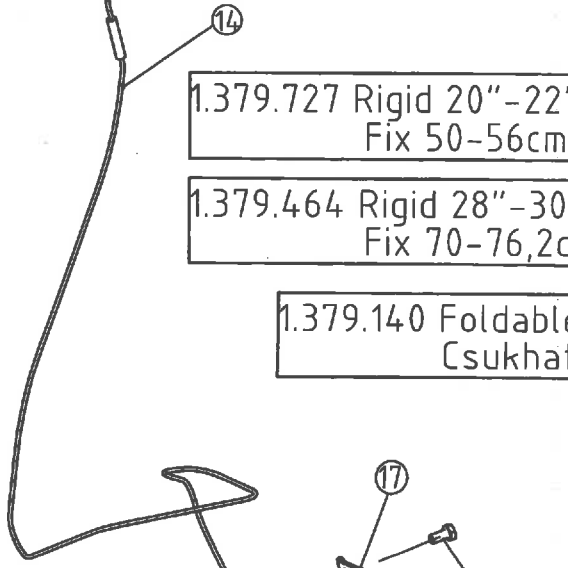

1.379.727 Rigid 20"-22"
Fix 50-56cm

1.379.464 Rigid 28"-30"
Fix 70-76,2cm

1.379.140 Foldable
Csukható

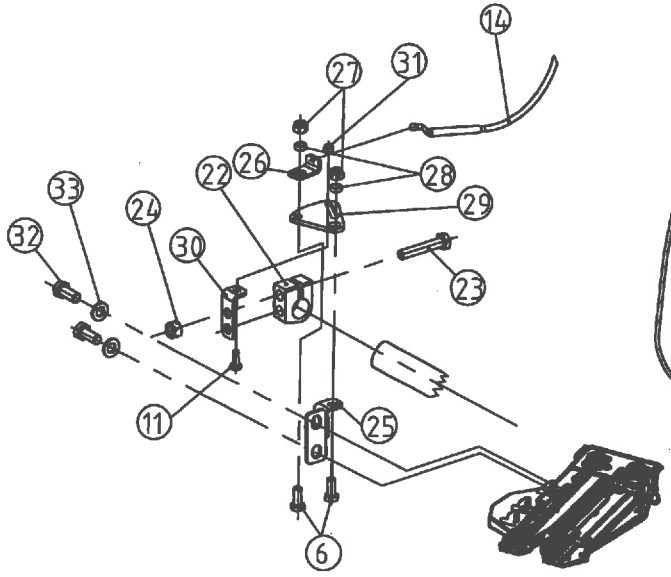

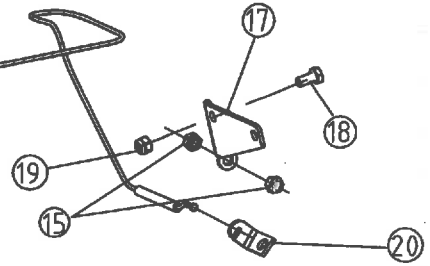

2014

MECHANICAL INDICATOR

Ref	Part Number	Description	Rigid 50-56 cm	Rigid 70-76,2 cm	Foldable
1.	1.319.165	Indicator weld.	1	1	1
2.	1.319.171	Pointer weld.	1	1	1
3.	71412000060	Washer M12 DIN 125	2	2	2
4.	72404002860	Cotter pin 4x28 DIN94	1	1	1
5.	96792685501	Spring	5	1	1
6.	79408002066	Hex. Head screw M8x20 DIN933/8.8	2	4	4
7.	91623938761	Washer A8	-	4	4
8.	73508000066	Hex. nut M8 DIN934/8.8	-	2	2
9.	1.327.120	Holder	-	-	1
9.	1.379.306	Holder	-	1	-
10.	1.378.856	Console	1	1	1
11.	81106001663	Round head screw M6x16 ISO7380/10.9	1	2	2
12.	70706000066	Lock nut M6 DIN980/8.8	3	3	3
13.	1.378.855	Pivot	1	1	1
14.	1.378.853	Indicator cable	-	1	1
14.	1.379.747	Indicator cable	1	-	-
15.	73508000066	Hex. nut M8 DIN934/8.8	2	4	4
16.	73506000066	Hex. nut M6 DIN934/8.8	2	2	2
17.	1.378.851	Console	-	1	1
18.	79408001666	Hex. Head screw M8x16 DIN933/8.8	-	1	1
19.	70708000066	Lock nut M8 DIN934/8.8	-	1	1
20.	1.378.852	Console	-	1	1
21.	1.327.131	Indicator label	-	1	1
22.	1.308.195	Retainer	1	-	-
23.	79410005566	Hex. Head screw M10x55 DIN933/8.8	1	-	-
24.	70710000066	Lock nut M10 DIN980/8.8	1	-	-
25.	1.379.733	Console	1	-	-
26.	1.379.738	Console	1	-	-
27.	74908000066	Hex nut - plastic insert M8 DIN 985/8.8	2	-	-
28.	1.329.747	Bushing	2	-	-
29.	1.379.737	Adjuster disk	1	-	-
30.	1.379.736	Console weld	1	-	-
31.	74906000066	Hex nut - plastic insert M6 DIN 985/8.8	1	-	-
32.	79410002066	Hex bolt -M10x20 - DIN933/8.8	6	6	6
33.	91623938861	Spring Washer- A10	6	6	6

Note: item 32 and 33 are the same as item 31 and 30 on page 16/A

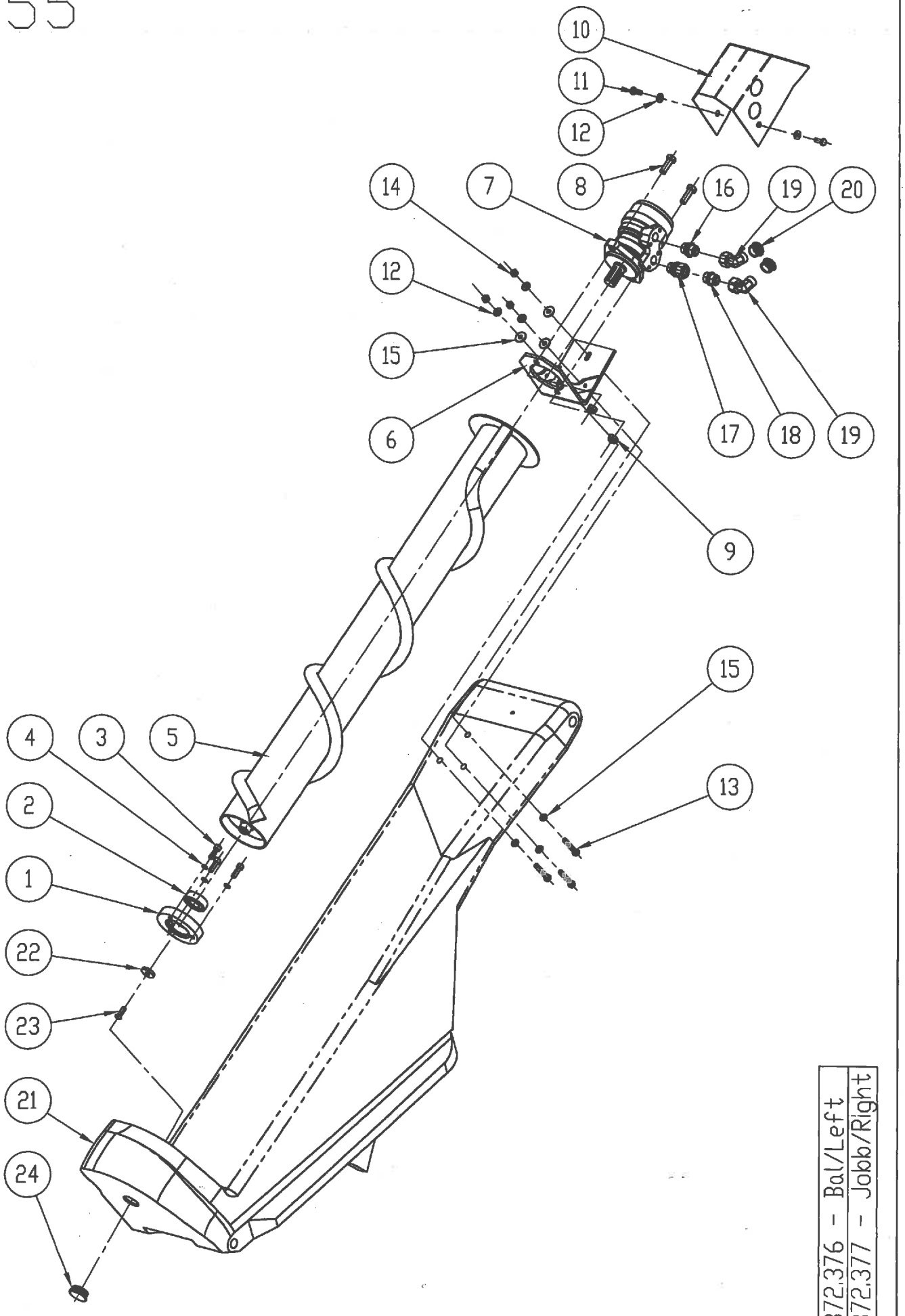

1.372.376 - Bal/Left
1.372.377 - Jobb/Right

ROTARY DIVIDER

Ref.	Part Number	Description		All models
1	1.378.822	Bearing housing		2
2	87030620514	Bearing 6205-2RS		2
3	80208002566	Hex socket head cap bolt M8x20 - DIN912/8.8		6
4	71808000060	Spring washer M8- DIN7980		6
5	1.378.808	Rotary divider - LH		1
5	1.378.809	Rotary divider - RH		1
6	1.378.825	Bracket weldid		2
7	1.378.835	Hydraulic motor MR50 SHD		2
8	79412003566	Hex bolt M12x35 - DIN933/8.8		4
9	74912000066	Hex nut - plastic insert M12 - DIN985/8.		4
10	1.378.830	Cover - LH		1
10	1.378.831	Cover - RH		1
11	79408002066	Hex bolt M8x20 - DIN933/8.8		4
12	91623938761	Spring washer - A8		10
13	79408005066	Hex bolt M8x50 - DIN933/8.8		6
14	73508000066	Hex nut M8 - DIN934		6
15	237.816.0	Washer M8		12
16	1.378.858	Fitting GE 15 LREDOMD		2
17	1.378.859	Fitting EVGE 15 LRED		2
18	1.378.861	Fitting GE 15 LCF		2
19	1.378.860	Fitting elbow - EVW 15 LOMD		4
20	1.322.794	Rubber plug		4
21	1.377.535	Outer divider - LH		1
21	1.377.535 .1	Outer divider - LH, RED		1
21	1.377.535.2	Outer divider - LH, YELLOW		1
21	1.377.535.3	Outer divider - LH, JD GREEN		1
21	1.377.535.5	Outer divider - LH, CLAAS GREEN		1
21	1.377.535.6	Outer divider - LH, SDF GREEN		1
21	1.377.535.7	Outer divider - LH, AGCO RED		1
21	1.377.535.8	Outer divider - LH, CHALLANGER YELLOW		1
21	1.377.535.9	Outer divider - LH, GLEANER GREY		1
21	1.377.536	Outer divider - RH		1
21	1.377.536.1	Outer divider - RH, RED		1
21	1.377.536.2	Outer divider - RH, YELLOW		1
21	1.377.536.3	Outer divider - RH, JD GREEN		1
21	1.377.536.5	Outer divider - RH, CLAAS GREEN		1
21	1.377.536.6	Outer divider - RH, SDF GREEN		1
21	1.377.536.7	Outer divider - RH, AGCO RED		1
21	1.377.536.8	Outer divider - RH, CHALLANGER YELLOW		1
21	1.377.536.9	Outer divider - RH, GLEANER GREY		1
22	1.314.695	Washer	2015 ->	2
23	78208002563	Hex socket button-head bolt M8x25 ISO7380/10.9	2015 ->	2
24	54000111532	Rubber plug	2015 ->	2
	1.372.376	Rotary divider - LH with cover		1
	1.372.376.1	Rotary divider - LH, RED with cover		1
	1.372.376.2	Rotary divider - LH, YELLOW with cover		1
	1.372.376.3	Rotary divider - LH, JD GREEN with cover		1
	1.372.376..5	Rotary divider - LH, CLAAS GREEN with cover		1
	1.372.376.6	Rotary divider - LH, SDF GREEN with cover		1
	1.372.376.7	Rotary divider - LH, AGCO RED with cover		1
	1.372.376.8	Rotary divider - LH, CHALLANGER YELLOW with cover		1
	1.372.376.9	Rotary divider - LH, GLEANER GREY with cover		1
	1.372.377	Rotary divider - RH with cover		1
	1.372.377.1	Rotary divider - RH, RED with cover		1
	1.372.377.2	Rotary divider - RH, YELLOW with cover		1
	1.372.377.3	Rotary divider - RH, JD GREEN with cover		1
	1.372.377.5	Rotary divider - RH, CLAAS GREEN with cover		1
	1.372.377.6	Rotary divider - RH, SDF GREEN with cover		1
	1.372.377.7	Rotary divider - RH, AGCO RED with cover		1
	1.372.377.8	Rotary divider - RH, CHALLANGER YELLOW with cover		1
	1.372.377.9	Rotary divider - RH, GLEANER GREY with cover		1

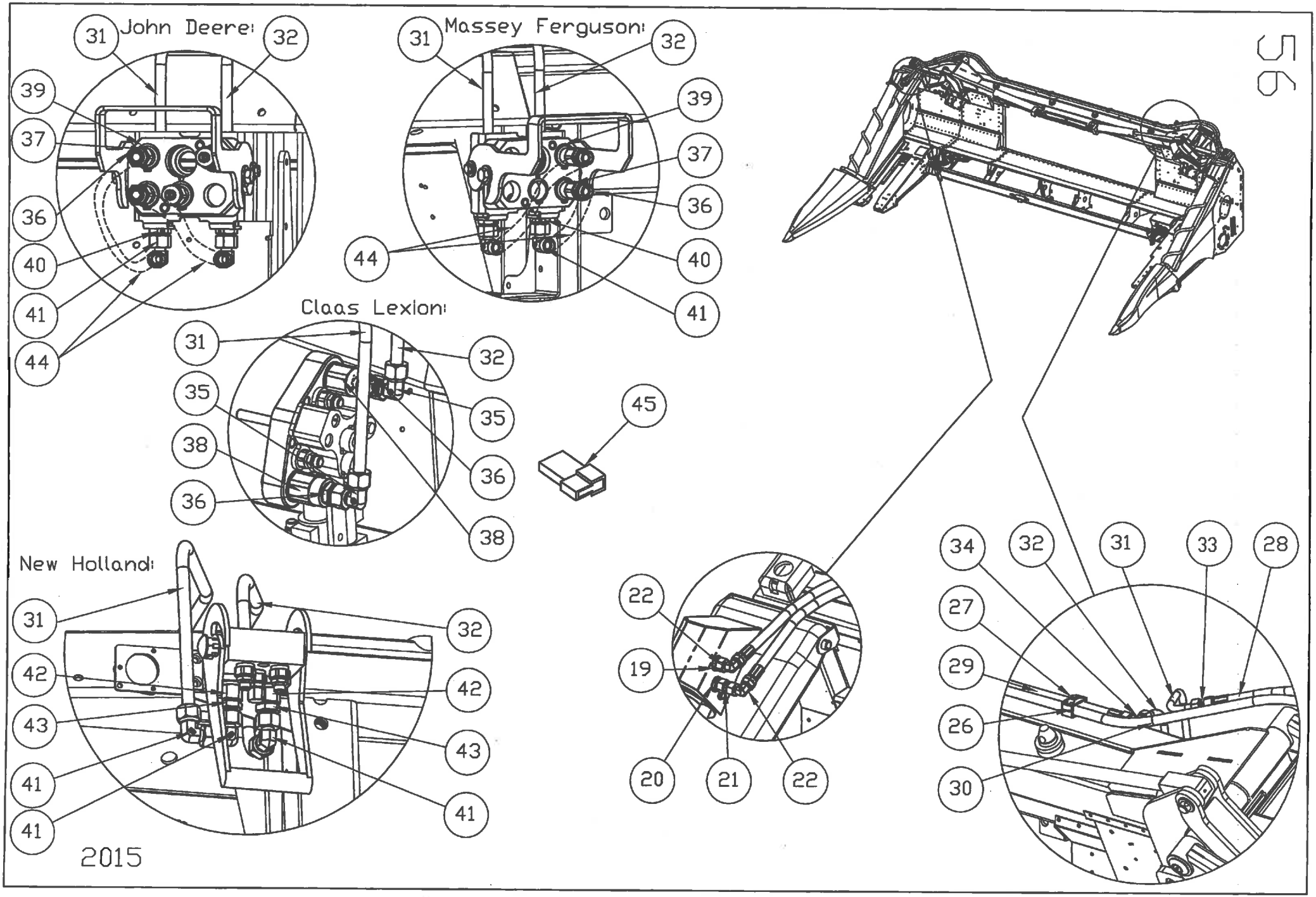
John Deere
Massey Ferguson
Claas Lexion
New Holland
2015

ROTARY DIVIDER HYDRAULIC

Ref.	Part Number	Description		6306F	6308F	6312F	6306 70	6306	6108	6208	6308 70	6308	6112	6212	6312 70	6312	6316
19	1.378.858	Fitting GE 15 LREDOMD		2	2	2	2	2	2	2	2	2	2	2	2	2	2
20	1.378.859	Fitting EVGE 15 LRED		2	2	2	2	2	2	2	2	2	2	2	2	2	2
21	1.378.861	Fittingr GE 15 LCF		2	2	2	2	2	2	2	2	2	2	2	2	2	2
22	1.378.860	Fitting - 90 deg EVW 15 LOMD		4	4	4	4	4	4	4	4	4	4	4	4	4	4
26	97308040102	Clamp 18		8	8	10	8	8	8	8	8	8	8	8	8	8	12
27	79408004066	Hex bolt M8x40 - DIN933/8.8		8	8	10	8	8	8	8	8	8	8	8	8	8	12
28	1.379.529	Hydraulic hose - LEXION/JD/MF/NH	→2015	1	-	-	-	-	-	-	-	-	-	-	-	-	-
28	1.331.808	Hydraulic hose - LEXION/JD/MF/NH	2016→	1	-	-	-	-	-	-	-	-	-	-	-	-	-
28	1.379.551	Hydraulic hose - LEXION/JD/MF/NH		-	-	1	-	-	-	-	-	-	-	-	-	-	-
28	1.379.571	Hydraulic hose - LEXION/JD/MF/NH		-	-	-	2	2	-	-	2	2	-	-	2	2	-
28	1.379.568	Hydraulic hose - LEXION/JD/MF/NH		-	-	-	-	-	-	-	-	1	-	-	-	-	-
28	1.379.574	Hydraulic hose - LEXION/JD/MF/NH		-	-	-	-	-	-	-	-	-	-	-	-	1	-
28	1.379.682	Hydraulic hose - LEXION/JD/MF/NH		-	-	-	-	-	-	-	-	-	-	-	-	-	1
28	1.379.758	Hydraulic hose - LEXION/JD/MF/NH		-	-	-	1	-	-	-	-	-	-	-	-	-	-
28	1.379.755	Hydraulic hose - LEXION/JD/MF/NH		-	-	-	-	-	-	-	1	-	-	-	-	-	-
28	1.379.761	Hydraulic hose - LEXION/JD/MF/NH		-	-	-	-	-	-	-	-	-	-	-	1	-	-
28	1.373.286	Hydraulic hose - LEXION/JD/MF/NH		-	-	-	-	-	1	-	-	-	-	-	-	-	-
28	1.373.283	Hydraulic hose - LEXION/JD/MF/NH		-	-	-	-	-	-	1	-	-	-	-	-	-	-
28	1.373.280	Hydraulic hose - LEXION/JD/MF/NH		-	-	-	-	-	-	-	-	-	1		-	-	-
28	1.373.277	Hydraulic hose - LEXION/JD/MF/NH		-	1*	-	-	-	-	-	-	-	-	1	-	-	-
29	1.379.530	Hydraulic hose - LEXION/JD/MF/NH		1	-	-	-	-	-	-	-	-	-	-	-	-	-
29	1.379.545	Hydraulic hose - LEXION/JD/MF/NH	→2015	-	1	-	-	-	-	-	-	-	-	-	-	-	-
29	1.379.553	Hydraulic hose- LEXION/JD/MF/NH		-	-	1	-	-	-	-	-	-	-	-	-	-	-
29	1.379.573	Hydraulic hose - LEXION/JD/MF/NH		-	-	-	-	1	-	-	-	-	-	-	-	-	-
29	1.379.570	Hydraulic hose - LEXION/JD/MF/NH		-	-	-	-	-	-	-	-	1	-	-	-	-	-
29	1.379.576	Hydraulic hose - LEXION/JD/MF/NH		-	-	-	-	-	-	-	-	-	-	-	-	1	-
29	1.379.684	Hydraulic hose - LEXION/JD/MF/NH		-	-	-	-	-	-	-	-	-	-	-	-	-	1
29	1.379.760	Hydraulic hose - LEXION/JD/MF/NH		-	-	-	1	-	-	-	-	-	-	-	-	-	-
29	1.379.757	Hydraulic hose - LEXION/JD/MF/NH		-	-	-	-	-	-	-	1	-	-	-	-	-	-
29	1.379.763	Hydraulic hose - LEXION/JD/MF/NH		-	-	-	-	-	-	-	-	-	-	-	1	-	-
29	1.373.285	Hydraulic hose - LEXION/JD/MF/NH		-	-	-	-	-	1	-	-	-	-	-	-	-	-
29	1.373.282	Hydraulic hose - LEXION/JD/MF/NH		-	-	-	-	-	-	1	-	-	-	-	-	-	-
29	1.373.279	Hydraulic hose - LEXION/JD/MF/NH		-	1*	-	-	-	-	-	-	-	1		-	-	-
29	1.373.276	Hydraulic hose - LEXION/JD/MF/NH		-	-	-	-	-	-	-	-	-	-	1	-	-	-
30	1.379.528	Hydraulic hose - LEXION/JD/MF/NH	→2015	1	-	-	-	-	-	-	-	-	-	-	-	-	-
30	1.379.763	Hydraulic hose - LEXION/JD/MF/NH	2016→	1	-	-	-	-	-	-	-	-	-	-	-	-	-
30	1.379.542	Hydraulic hose - LEXION/JD/MF/NH	→2015	-	1	-	-	-	-	-	-	-	-	-	-	-	-
30	1.379.552	Hydraulic hose - LEXION/JD/MF/NH		-	-	1	-	-	-	-	-	-	-	-	-	-	-
30	1.379.572	Hydraulic hose - LEXION/JD/MF/NH		-	-	-	-	1	-	-	-	-	-	-	-	-	-
30	1.379.569	Hydraulic hose - LEXION/JD/MF/NH		-	-	-	-	-	-	-	-	1	-	-	-	-	-
30	1.379.575	Hydraulic hose - LEXION/JD/MF/NH		-	-	-	-	-	-	-	-	-	-	-	-	1	-
30	1.379.683	Hydraulic hose - LEXION/JD/MF/NH		-	-	-	-	-	-	-	-	-	-	-	-	-	1

Note: * only for machines with higher serial number than xxxxx16xxx

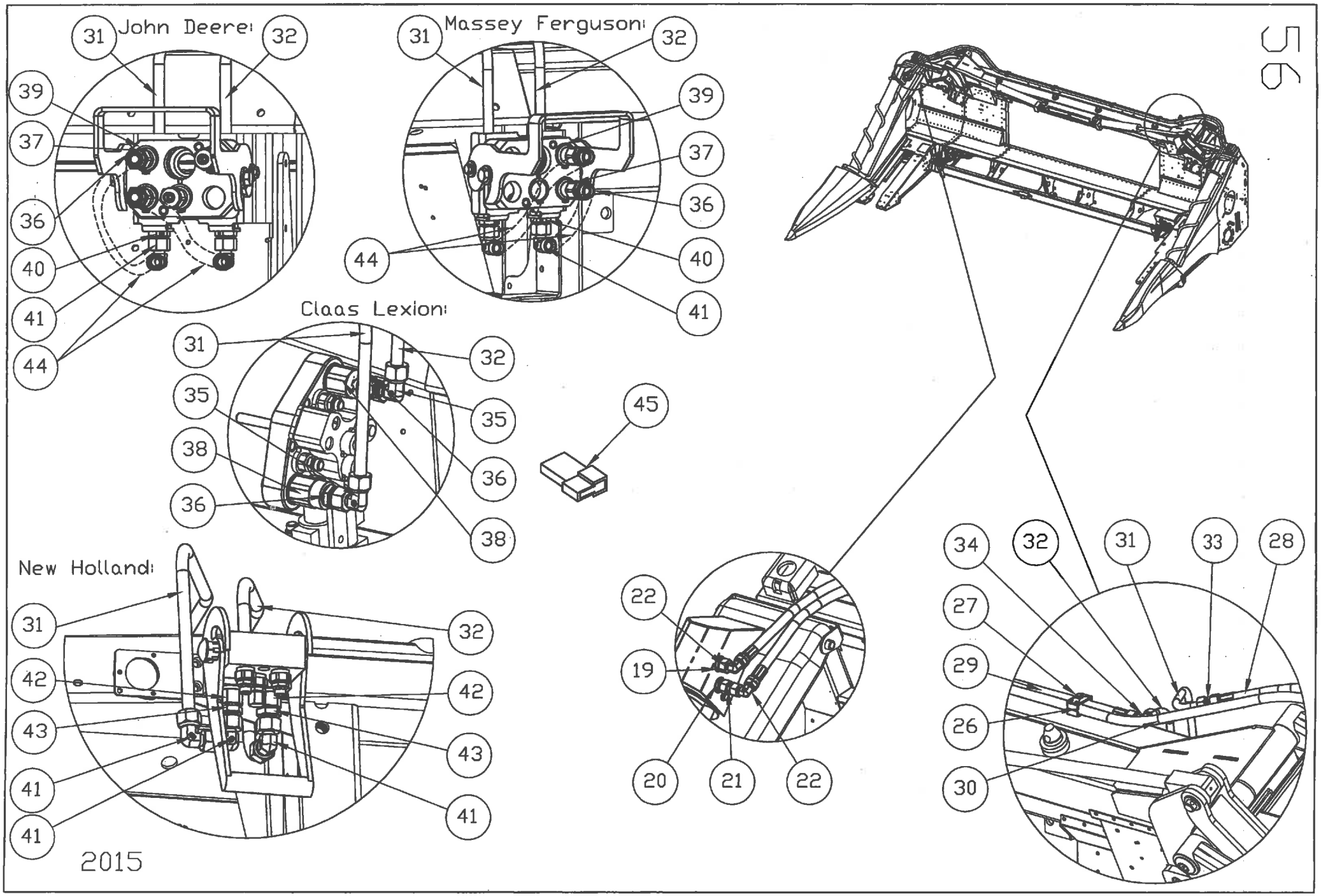
John Deere
31
32
39
37
36
40
41
44
Massey Ferguson
31
32
39
37
36
44
40
41
Claas Lexion
31
32
35
35
38
36
36
38
45
New Holland
31
32
42
42
43
43
41
41
41
2015
22
19
20
21
22
34
32
31
33
28
27
29
26
30

ROTARY DIVIDER HYDRAULIC

Ref.	Part Number	Description		6306F	6308F	6312F	6306 70	6306	6108	6208	6308 70	6308	6112	6212	6312 70	6312	6316
30	1.379.759	Hydraulic hose - LEXION/JD/MF/NH		-	-	-	1	-	-	-	-	-	-	-	-	-	-
30	1.379.756	Hydraulic hose - LEXION/JD/MF/NH		-	-	-	-	-	-	-	1	-	-	-	-	-	-
30	1.379.762	Hydraulic hose - LEXION/JD/MF/NH		-	-	-	-	-	-	-	-	-	-	-	1	-	-
30	1.373.284	Hydraulic hose - LEXION/JD/MF/NH		-	-	-	-	-	1	-	-	-	-	-	-	-	-
30	1.373.281	Hydraulic hose - LEXION/JD/MF/NH		-	-	-	-	-	-	1	-	-	-	-	-	-	-
30	1.373.278	Hydraulic hose - LEXION/JD/MF/NH		-	1*	-	-	-	-	-	-	-	1	-	-	-	-
30	1.373.275	Hydraulic hose - LEXION/JD/MF/NH		-	-	-	-	-	-	-	-	-	-	1	-	-	-
31	1.379.526	Hydraulic tube - LEXION	→2015	1	1	-	-	-	-	-	-	-	-	-	-	-	-
31	1.379.554	Hydraulic tube - LEXION	→2015	-	-	1	-	-	-	-	-	-	-	-	-	-	-
31	1.379.527	Hydraulic tube - JD/MF	→2015	1	1	-	-	-	-	-	-	-	-	-	-	-	-
31	1.379.539	Hydraulic tube - NH	→2015	1	1	1	-	-	-	-	-	-	-	-	-	-	-
31	1.379.563	Hydraulic tube - LEXION		-	-	-	1	1	-	-	1	1	-	-	1	1	-
31	1.379.681	Hydraulic tube - LEXION		-	-	-	-	-	1	1	-	-	1	1	-	-	1
31	1.379.565	Hydraulic tube - JD/MF		-	-	-	1	1	-	-	-	1	-	-	-	1	-
31	1.373.287	Hydraulic tube - JD/MF		-	-	-	-	-	1	1	-	-	1	1	-	-	1
31	1.379.566	Hydraulic tube - NH		-	-	-	1	1			1	1	-	-	1	1	-
31	1.373.289	Hydraulic tube - NH		-	-	-	-	-	1	1	-	-	1	1	-	-	1
32	1.379.523	Hydraulic tube - LEXION	→2015	1	1	1	-	-			-	-	-	-	-	-	-
32	1.379.532	Hydraulic tube - JD/MF	→2015	1	1	1	-	-	-	-	-	-	-	-	-	-	-
32	1.379.555	Hydraulic tube - JD/MF	→2015	-	-	1	-	-	-	-	-	-	-	-	-	-	-
32	1.379.538	Hydraulic tube - NH	→2015	1	1	-	-	-	-	-	-	-	-	-	-	-	-
32	1.379.556	Hydraulic tube - NH		-	-	1	-	-	-	-	-	-	-	-	-	-	-
32	1.379.562	Hydraulic tube - LEXION		-	-	-	1	1	-	-	1	1	-	-	1	1	-
32	1.379.680	Hydraulic tube - LEXION		-	1*	-	-	-	1	1	-	-	1	1	-	-	1
32	1.379.564	Hydraulic tube - JD/MF		-	-	-	1	1	-	-	-	1	-	-	-	1	-
32	1.373.288	Hydraulic tube - JD/MF		1*	1*	-	-	-	1	1	-	-	1	1	-	-	1
32	1.379.567	Hydraulic tube - NH		-	-	-	1	1	-	-	1	1	-	-	1	1	-
32	1.373.290	Hydraulic tube - NH		-	1*	-	-	-	1	1	-	-	1	1	-	-	1
33	1.378.861	Fitting GE 15 LCF - LEXION/JD/MF/NH		1	1	-	-	-	-	-	-	-	-	-	-	-	-
34	1.379.524	Fitting-90deg W 15LCF - LEXION/JD/MF/NH		1	1	2	2	2	2	2	2	2	2	2	2	2	2
35	1.378.860	Fitting - 90 deg EVW 15 LOMD - LEXION/JD/MF		2	2	2	2	2	2	2	2	2	2	2	2	2	2
36	1.379.292	Fitting 7/8-14UNF-M22X1.5 - LEXION/JD/MF		2	2	2	2	2	2	2	2	2	2	2	2	2	2
37	1.329.890	Fitting - JD/MF		2	2	2	2	2	2	2	2	2	2	2	-	2	2
38	91668372320	Fitting - LEXION		2	2	2	2	2	2	2	2	2	2	2	2	2	2
39	1.327.052	Retaining ring - extemaz - JD/MF		2	2	2	2	2	2	2	2	2	2	2	-	2	2
40	1.379.525	Fitting bulg head SV 15-PL - JD/MF		2	2	2	2	2	2	2	2	2	2	2	-	2	2
41	1.378.860	Fitting - 90 deg EVW 15 LOMD - NH		3	3	3	3	3	3	3	3	3	3	3	3	3	3
42	1.332.515	Fitting 3/4-16UNF - NH		2	2	2	2	2	2	2	2	2	2	2	2	2	2
43	1.379.537	Fitting 3/4-16 UNF-M22X1.5A4 - NH		2	2	2	2	2	2	2	2	2	2	2	2	2	2
44	1.379.531	Hydraulic hose - JD/MF		2	2	2	2	2	2	2	2	2	2	2	2	2	2
45	1.379.630	Short circuit (LEXION, AGCO)		1	1	1	1	1	1	1	1	1	1	1	1	1	1

Note: * only for machines with higher serial number than xxxxx16xxx

Fix vázú csőtörő
hidraulikus törőlécállítással

Rigid-framed corn heads
with hydr. SPA

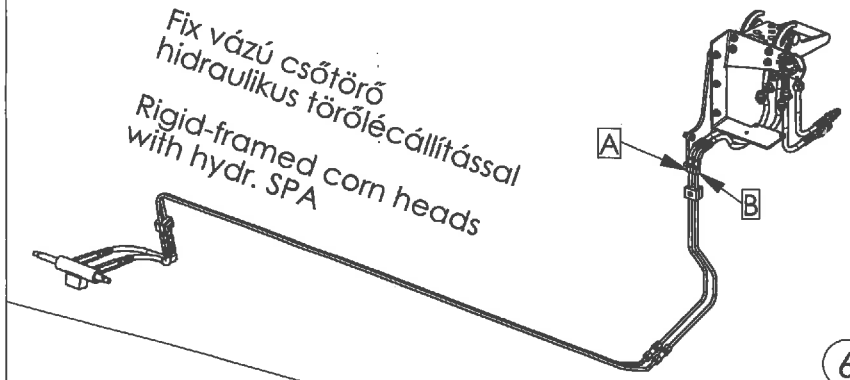

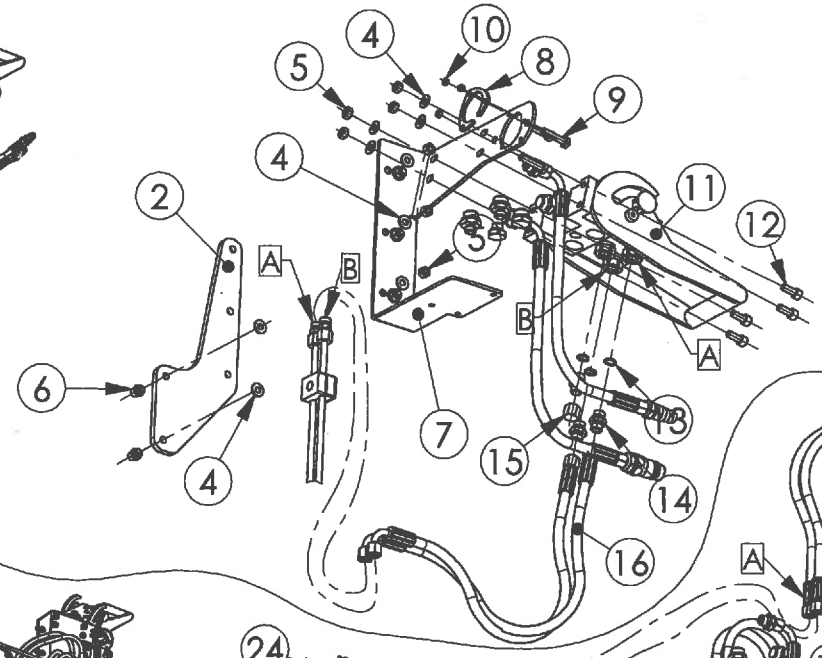

Csukható csőtörő hidraulikus törőlécállítással

Foldable corn heads with hydr. SPA

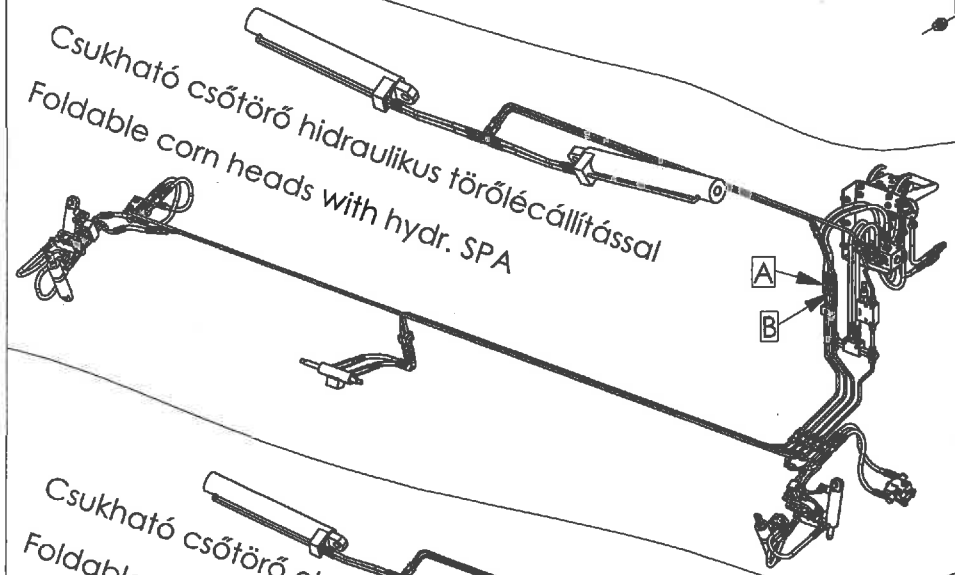

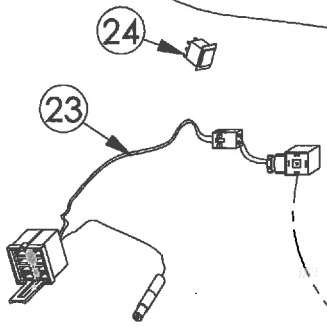

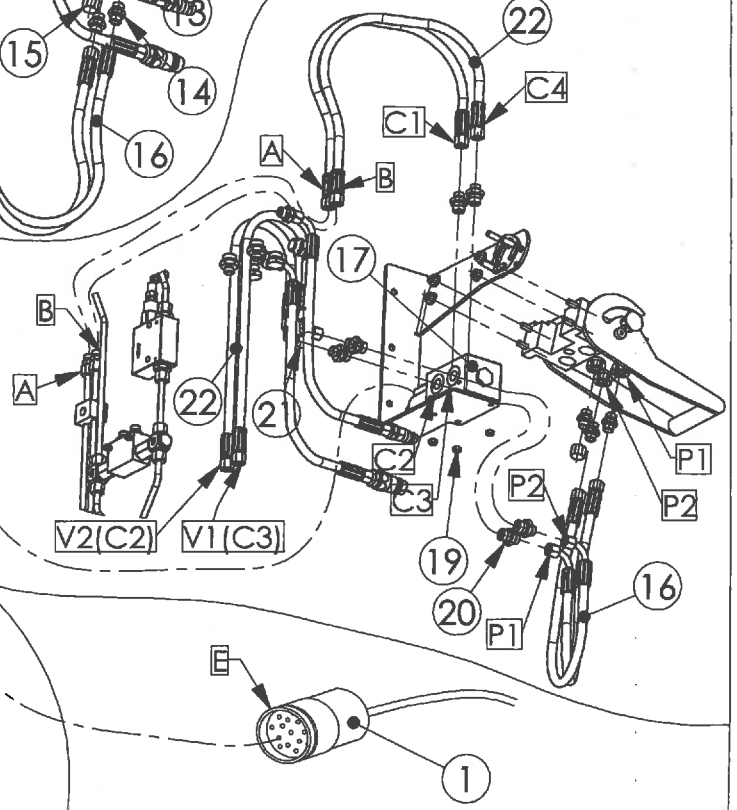

Csukható csőtörő elektromos törőlécállítással

Foldable corn heads with electric SPA

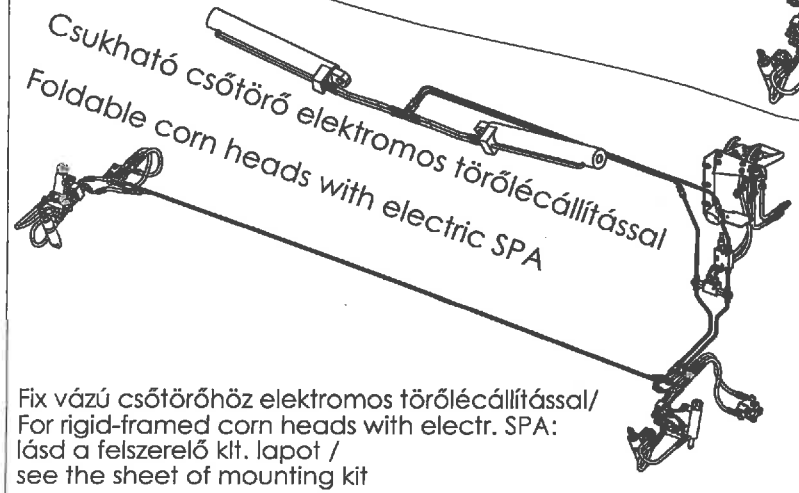

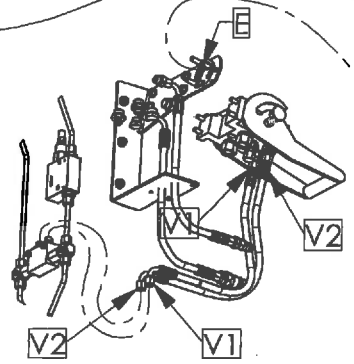

Fix vázú csőtörőhöz elektromos törőlécállítással/
For rigid-framed corn heads with electr. SPA:
lásd a felszerelő klt. lapot /
see the sheet of mounting kit

Kábeleket és kábelkötegeket lásd
a felszerelő klt. lapokon!

For wires and harnesses see
mounting kit pages!

MULTI-COUPLING KIT: NH 2002→
(TORUM, ACROS, VECTOR, DON)

Ref.	Part Number	Description	RIGID with hydr. SPA	FOLDABLE with hydr. SPA	FOLDABLE with electr. SPA
1.	See mounting kit pages	Harness			
2.	1.355.489	Support plate	1	1	1
3.	79408002566	Hex bolt M8x25 - DIN933/8.8	5	5	5
4.	91623938761	Spring washer	9	9	9
5.	73508000066	Hex nut M8 - DIN934	7	7	7
6.	70808000026	Rivet nut M8	2	2	2
7.	1.379.443	Bracket	1	1	1
8.	1.327.148	Plate	1	1	1
9.	79405001660	Hex bolt M5x16 - DIN933/8.8	3	3	3
10.	73505000066	Hex nut M5 - DIN934	3	3	3
11.	1.327.510	Multiclutch	1	1	1
12.	80208002066	Hex socket head cap bolt M8x20 DIN912/8.8	4	4	4
13.	96789617873	O-ring	3	3	3
14.	1.327.509	Fitting M14x1.5 / 9/16-18 UNF	3	3	3
15.	1.327.508	Cup	1	1	1
16.	1.351.403	Hydraulic hose 1SNDN6-585	2	2	2
17.	1.379.394	Directional valve LC 6/2	-	1	-
18.	80206004066	Hex socket head cap bolt M6x40 DIN912/8.8	-	3	-
19.	74906000066	Hex nut - plastic insert M6 - DIN985	-	3	-
20.	1.353.318	Fitting - M14X1.5 / G3/8	-	6	-
21.	1.314.510	Fitting - 90deg. EVW 8 PL	-	2	-
22.	1.331.795	Hydraulic hose 1SNDN6-630	-	4	-
23.	1.353.204	Harness	-	1	-
24.	1.353.213	Switch 6FH 007 832-121 HELLA	-	1	-
-	1.379.472	Directional valve assy (17-24)			
-	1.379.475	Hydraulic multipoint kit. (2-16)			

Fix vázú csőtörő
hidraulikus törőlécállítással
Rigid-framed corn heads
with hydr. SPA

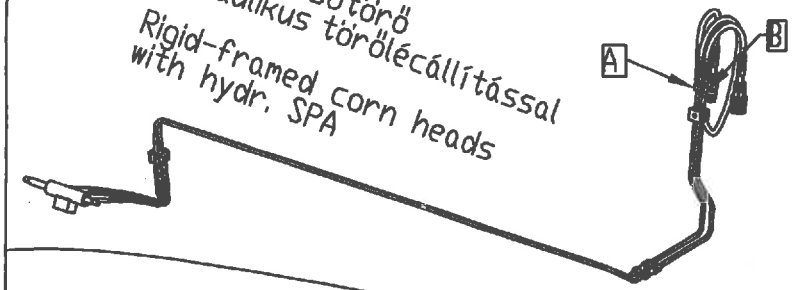

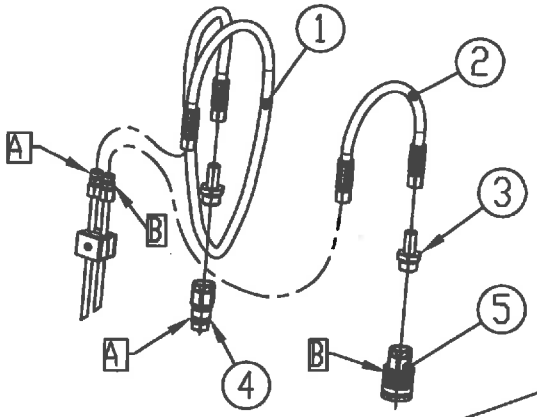

Csukható csőtörő hidraulikus törőlécállítással
Foldable corn heads with hydr. SPA

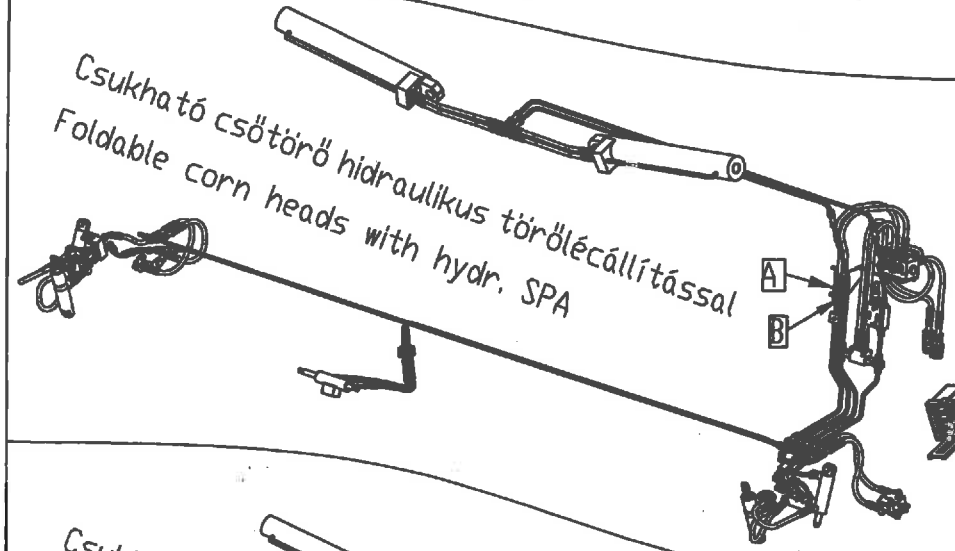

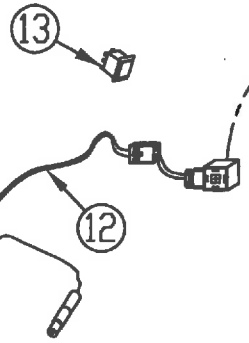

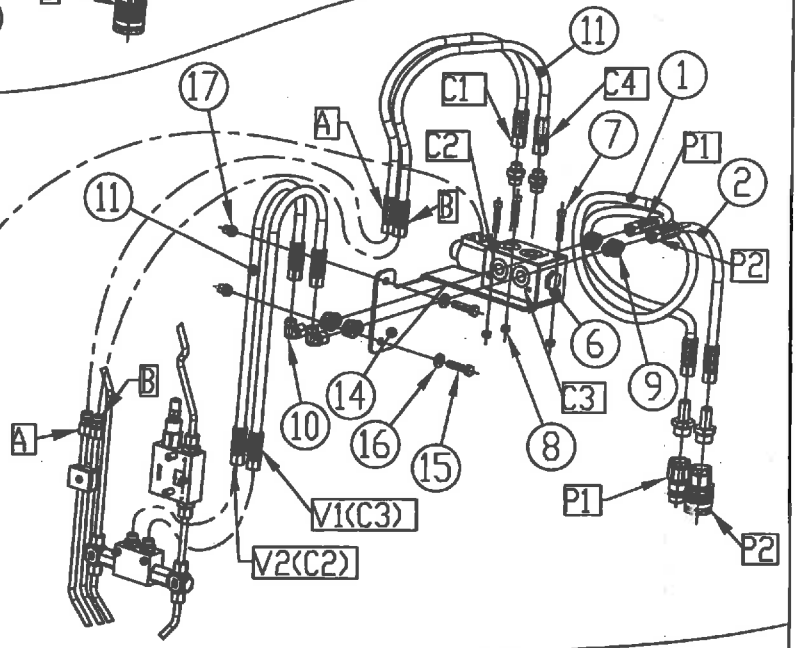

Csukható csőtörő elektromos törőlécállítással
Foldable corn heads with electric SPA

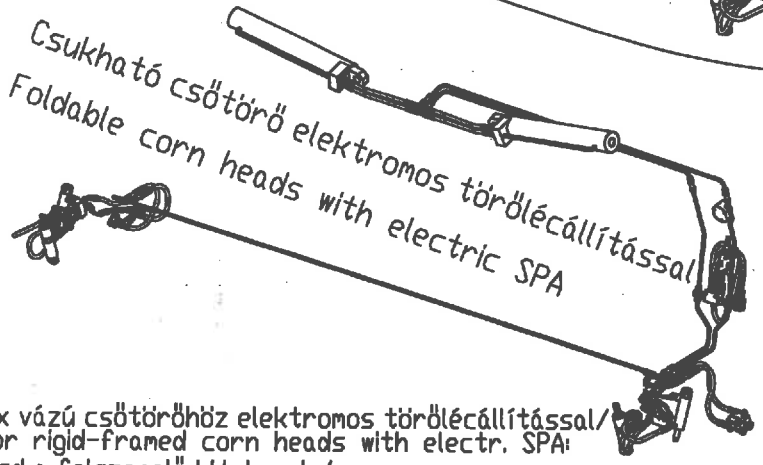

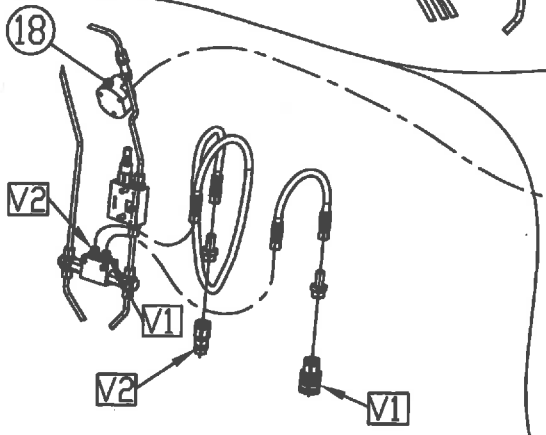

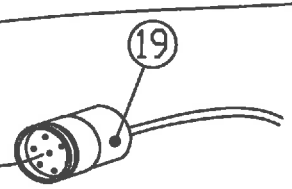

Fix vázú csőtörőhöz elektromos törőlécállítással/
For rigid-framed corn heads with electr. SPA:
lásd a felszerelő klt. lapot /
see the sheet of mounting kit

Kábeleket és kábelkötegeket lásd
a felszerelő klt. lapokon!

For wires and harnesses see
mounting kit pages!

HYDRAULIC KIT: IHC

Ref.	Part Number	Description	RIGID with hydr. SPA	FOLDABLE with hydr. SPA	FOLDABLE with electr. SPA
1.	1.353.195	Hydraulic hose 1SNDN6-1200	1	1	1
2.	1.330.772	Hydraulic hose 1SNDN6-375	1	1	1
3.	1.314.572	Fitting M14x1.5 / 7/8-14 UNF	2	2	2
4.	1.315.905	Hydraulic quick-coupler	1	1	1
5.	1.314.987	Hydraulic quick-coupler	1	1	1
6.	1.379.394	Directional valve LC 6/2	-	1	-
7.	80206004066	Hex socket head cap bolt M6x40 DIN912/8.8	-	3	-
8.	74906000066	Hex nut - plastic insert M6 - DIN985	-	3	-
9.	1.353.318	Fitting - M14X1.5 / G3/8	-	6	-
10.	1.314.510	Fitting - 90deg. EVW 8 PL	-	2	-
11.	1.331.795	Hydraulic hose 1SNDN6-630	-	4	-
12.	1.353.204	Harness	-	1	-
13.	1.353.213	Switch 6FH 007 832-121 HELLA	-	1	-
14.	1.379.643	Bracket	-	1	-
15.	79408003566	Hex bolt M8x35 - DIN933/8.8	-	2	-
16.	91623938761	Spring washer	-	2	-
17.	70808000026	Rivet nut M8	-	2	-
18.	See item 22, page 18/A				
19.	See item 39, page 18/A				
-	1.379.472	Directional valve assy (6-13)			

65

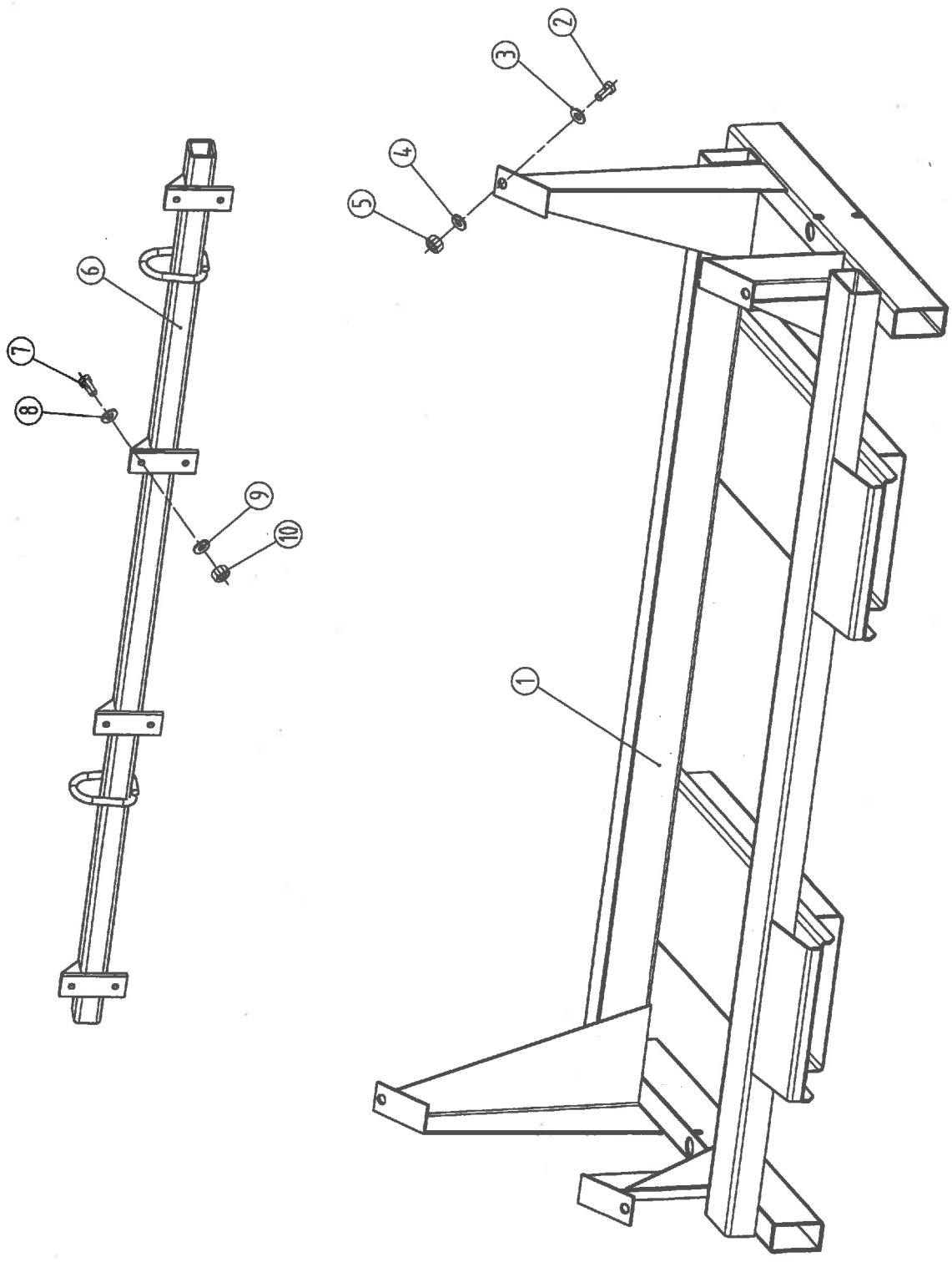

2017

SHIPPING ACCESSORIES

Ref.	Part Number	Description	6306-70, 6306F-70	6306, 6306F	6108	6208	6308-70	6308, 6308F	6309F	6112	6212	6312-70	6312, 6312F	6316
1	1.320.609	Shipping stand weld.	1	1	1	1	1	1	1	1	1	1	1	1
2	79416003066	Hex bolt M16x30 - DIN933/8.8	4	4	4	4	4	4	4	4	4	4	4	4
3	71416000060	Washer M16 - DIN125 - 200HV	4	4	4	4	4	4	4	4	4	4	4	4
4	72216000060	Spring washer M16 - DIN128/A	2	2	2	2	2	2	2	2	2	2	2	2
5	73516000066	Hex nut M16 - DIN934	2	2	2	2	2	2	2	2	2	2	2	2
6	1.354.583	Lifting bar weld.	1	-	-	-	1	-	-	-	-	2	-	-
6	1.353.054	Lifting bar weld.	-	1	-	-	-	1	-	-	-	-	2	2
6	1.353.732	Lifting bar weld.	-	-	1	-	-	-	-	2	-	-	-	-
6	1.353.345	Lifting bar weld.	-	-	-	1	-	-	-	-	2	-	-	-
6	1.377.530	Lifting bar weld.	-	-	-	-	-	-	1	-	-	-	-	-
7	79412003566	Hex bolt M12x35 - DIN933/8.8	8	8	8	8	8	8	10	16	16	16	16	16
8	71412000060	Washer M12 - DIN125 - 200HV	8	8	8	8	8	8	10	16	16	16	16	16
9	91623938961	Spring washer - A12	8	8	8	8	8	8	10	16	16	16	16	16
10	70712000066	Lock nut - DIN980 - M12	8	8	8	8	8	8	10	16	16	16	16	16

TORQUE VALUES FOR FASTENERS (Nm)

SIZE	QUALITY		
BOLTS / SCREWS	8.8	10.9	12.9
NUTS	8.	10.	12.
M6	10	14	16
M8	23	33	40
M10	45	63	75
M12	78	110	130
M14	122	175	210
M16	195	270	325
M18	260	370	440
M20	370	525	630
M24	640	900	1080
M30	1260	1800	2160

Part number index - 2017

Part number	Page number
002.846.0	21/A,22/A,23/A
013.208.0	28
013.268.0	28
05200000800	3
05200001200	3,13/A
05200001600	5/A,48
05200002024	3,13/A
05200200024	5/A,48
082.978.2	28
088.809.1	28
1.200.628	43, 43/A
1.200.684	24
1.201.329	40
1.300.200	15/A
1.300.278	64
1.301.068	35,40,41, 52
1.301.069	35,40,41, 52
1.301.302	40,41, 52
1.301.433	8,9,10
1.301.433 /237.592/	11/A,49
1.301.766	42
1.302.738	40
1.302.884	40
1.302.886	40
1.304.053	40
1.304.143	39
1.304.769	8,9
1.304.770	8,9
1.304.802	36
1.304.803	36
1.304.876	8,9
1.304.893	8,10
1.304.935	8
1.304.985	39
1.308.132	8, 9
1.308.407	8,9,10
1.308.195	18/A,54
1.308.414	9,10
1.308.783	24, 24/A,24/A1,24/A2,24/A3, 24/A4
1.308.786	31
1.308.899	18/A
1.308.932	9,10
1.308.948	9,10
1.309.011	8,9,10
1.309.052	8,9,10
1.309.247	3,5/A,13/A,48
1.309.259	9,10

Part number	Page number
1.309.377	46
1.309.601	24, 24/A,24/A1,24/A2, 24/A3, 24/A4,
1.309.604	28,60
1.310.009	21/A,23/A,34
1.310.514	24, 24/A,24/A1,24/A2, 24/A3, 24/A4
1.310.551	18/A, 24
1.310.553	18/A
1.310.554	18/A
1.310.780	8,9,10
1.310.898	41, 52
1.310.936	52
1.313.536	1, 2, 2/A
1.314.099	6, 7,20,21/A,21/B,22/A, 23/A, 29/A,29/B,33,34,35, 42,45
1.314.100	25
1.314.392	40,41, 52
1.314.407	41
1.314.508	24, 24/A
1.314.509	24, 24/A,24/A1,24/A2,24/A3, 24/A4, 24/B
1.314.510	24, 24/A,24/A1,24/A2,24/A3, 24/A4,29/A,29/B, 28, 58/A, 58/B, 59, 60,63
1.314.514	28
1.314.572	59
1.314.695	55
1.314.748	40
1.314.987	59
1.315.035	58/B,60
1.315.037	58/B
1.315.070	8,9,10
1.315.367	40
1.315.408	8,9
1.315.431	20
1.315.438	31
1.315.439	31
1.315.440	31
1.315.590	31
1.315.717	20
1.315.905	59
1.315.983	1, 2
1.316.247	40
1.317.719	38
1.317.726	38
1.317.750	38

Part number	Page number
1.318.122	8,9
1.318.338	7
1.319.154	1
1.319.165	54
1.319.171	54
1.319.232	28
1.319.233	28
1.319.455	7
1.319.873	2
1.319.878	61
1.320.011	40
1.320.173	40,41, 52
1.320.253	40
1.320.275	39
1.320.276	37
1.320.277	37
1.320.280	26,27,37
1.320.291	39
1.320.426	36
1.320.482	36
1.320.492	8,9,10
1.320.493	8,9,10
1.320.515	38
1.320.516	38
1.320.540	8
1.320.558	35
1.320.609	65
1.320.686	46
1.320.828	27
1.320.988	64
1.321.225	27
1.321.932	18/A
1.322.001	64
1.322.004	64
1.322.005	64
1.322.008	64
1.322.009	64
1.322.010	64
1.322.011	64
1.322.037	6,7
1.322.329	37
1.322.332	37
1.322.333	37
1.322.351	37
1.322.393	39
1.322.394	39
1.322.402	36
1.322.406	38

Part number	Page number
1.322.437	36
1.322.445	64
1.322.686	44
1.322.687	44
1.322.689	44
1.322.691	44
1.322.794	55
1.323.319	61
1.323.320	61
1.323.321	61
1.323.323	61
1.323.324	61
1.323.325	61
1.323.326	61
1.323.327	28
1.323.339	61
1.323.420	20
1.325.440	21/A,22/A,23/A
1.325.892	21/A,22/A,23/A
1.326.221	11/A,49
1.326.285	25/A
1.326.286	25/A
1.326.502	46
1.326.504	51
1.326.507	51
1.326.519	51
1.326.520	51
1.326.521	51
1.326.522	51
1.326.532	51
1.326.673	46
1.326.675	46
1.326.676	46
1.326.681	46
1.326.682	46
1.326.683	46
1.326.684	46
1.326.685	46
1.326.688	46
1.326.689	46
1.326.700	31
1.326.701	31
1.326.702	31
1.326.703	31
1.326.704	31
1.326.705	31
1.326.706	31
1.326.707	31

Part number	Page number
1.326.774	40
1.327.000	29/A
1.327.001	29/A,29/B
1.327.002	29/A,29/B
1.327.003	29/A,29/B
1.327.052	29/A,29/B,56
1.327.053	29/A,29/B
1.327.054	29/A,29/B
1.327.062	27
1.327.066	27
1.327.120	54
1.327.131	54
1.327.148	58/A
1.327.486	26, 27, 37, 51
1.327.487	35
1.327.488	25/A
1.327.495	46
1.327.508	58/A
1.327.509	58/A
1.327.510	58/A
1.327.536	25/A
1.327.601	25/A
1.327.638	25/A,27,35,37,51
1.327.662	26, 27,37,51
1.327.663	25/A
1.327.664	35
1.327.689	13/A, 21/A, 23/A
1.327.690	13/A
1.327.806	2/A
1.327.903	1
1.328.472	9,10
1.328.473	9,10
1.328.479	9,10
1.328.492	9,10
1.328.539	26,27
1.328.540	51
1.328.541	51
1.328.546	37
1.328.547	25/A
1.328.548	25/A
1.328.549	46
1.328.550	46
1.328.607	18/A
1.328.704	40
1.328.831	20
1.328.834	20
1.328.835	20
1.328.843	20

Part number	Page number
1.328.844	20
1.328.862	33,34
1.329.066	40
1.329.074	50
1.329.077	40,41, 52
1.329.097	40
1.329.099	41, 52
1.329.102	40
1.329.103	40
1.329.163	22/A, 33, 34
1.329.164	21/A,21/B,22/A,23/A, 33, 34
1.329.166	35
1.329.216	25/A
1.329.233	25/A
1.329.234	25/A
1.329.235	25/A
1.329.236	25/A
1.329.237	25/A
1.329.238	25/A
1.329.239	25/A
1.329.240	25/A
1.329.241	25/A
1.329.242	25/A
1.329.243	25/A
1.329.244	25/A
1.329.245	25/A
1.329.246	25/A
1.329.247	25,25/A
1.329.250	25,25/A
1.329.251	25/A
1.329.253	25,25/A
1.329.254	25/A
1.329.255	25/A
1.329.257	40
1.329.258	40
1.329.268	40,41
1.329.269	40,41
1.329.274	40,41, 52
1.329.275	40,41, 52
1.329.276	40,41, 52
1.329.277	40,41, 52
1.329.278	40,41, 52
1.329.294	25/A
1.329.295	25/A
1.329.296	25/A
1.329.304	52
1.329.305	52
1.329.316	24,24/A4

Part number	Page number
1.329.329	41
1.329.331	41
1.329.332	41
1.329.341	41
1.329.344	41, 52
1.329.345	41, 52
1.329.359	41
1.329.360	41, 52
1.329.361	41, 52
1.329.362	41, 52
1.329.363	41, 52
1.329.387	27
1.329.397	27
1.329.398	27
1.329.400	27
1.329.455	42
1.329.457	42
1.329.458	42
1.329.459	42
1.329.462	42
1.329.463	42
1.329.484	26
1.329.485	26
1.329.498	26
1.329.500	26
1.329.501	26
1.329.539	42
1.329.541	42
1.329.543	42
1.329.720	6,7
1.329.744	23/A,34
1.329.746	23/A,34
1.329.747	21/A,21/B,22/A,23/A, 33,34
1.329.847	41, 52
1.329.848	41, 52
1.329.852	41, 52
1.329.854	41, 52
1.329.855	41, 52
1.329.856	41, 52
1.329.859	52
1.329.860	52
1.329.865	52
1.329.866	52
1.329.867	52
1.329.890	56
1.329.893	41, 52
1.329.906	42
1.329.907	42

Part number	Page number
1.329.908	42
1.329.909	42
1.329.910	42
1.329.977	35
1.330.757	24/A,24/A1,24/A2, 24/A3
1.330.772	24/A,24/A1,24/A2, 24/B, 59
1.330.777	24, 24/A
1.330.880	23/A
1.331.635	57
1.331.640	57
1.331.795	29/A,29/B,58/A,58/B,59, 60, 63
1.331.808	56
1.332.011	50
1.332.020	50
1.332.029	50
1.332.030	50
1.332.033	50
1.332.035	50
1.332.044	50
1.332.059	50
1.332.061	50
1.332.062	50
1.332.063	50
1.332.064	50
1.332.065	58/B
1.332.068	50
1.332.078	42
1.332.128	50
1.332.251	31
1.332.446	37
1.332.447	37
1.332.458	25/A
1.332.459	42
1.332.461	37
1.332.462	37
1.332.476	40
1.332.478	26
1.332.479	26
1.332.487	50
1.332.515	56
1.332.848	40,41,50,52
1.332.849	40,41,50,52
1.332.954	64
1.333.495	53
1.351.163	15/A
1.351.164	14,14/B,15/A
1.351.178	8,9,10

Part number index - 2017

Part number	Page number
1.351.215	15/A
1.351.349	8,9,10
1.351.402	28
1.351.403	58/A
1.351.922	28
1.352.495	6,7
1.352.820	1
1.352.821	1
1.352.882	1
1.352.896	24/A
1.353.028	1,51
1.353.038	13/A
1.353.054	65
1.353.171	8,9
1.353.172	8,9
1.353.178	9,10
1.353.179	9,10
1.353.195	28,29/A,29/B,58/B,59, 63
1.353.204	29/A,29/B,58/A,58/B,59, 60,63
1.353.213	29/A,29/B,58/A,58/B,59, 60,63
1.353.218	8,9
1.353.277	1
1.353.284	1
1.353.286	1
1.353.318	24/A,24/A1,24/A2.24/A3 24/A4,29/A,29/B,58/A, 58/B, 59, 60,63
1.353.345	65
1.353.409	51
1.353.411	51
1.353.412	51
1.353.413	51
1.353.422	25/A
1.353.461	21/A,21/B,22/A,23/A, 33,34
1.353.462	21/A,21/B,22/A,23/A, 33,34
1.353.529	1
1.353.530	1
1.353.531	1
1.353.533	1
1.353.534	1
1.353.535	1
1.353.552	29/A,29/B
1.353.553	29/A,29/B
1.353.559	27
1.353.560	8,9,10
1.353.561	25/A

Part number	Page number
1.353.562	27
1.353.567	8,10
1.353.568	8,10
1.353.571	8,10,51
1.353.572	8,10
1.353.573	8,10,51
1.353.575	8,10
1.353.576	8,10
1.353.577	8,10
1.353.578	8,10
1.353.732	65
1.353.755	39
1.354.037	6,7
1.354.106	29/A,29/B
1.354.107	29/A,29/B
1.354.171	26
1.354.244	65
1.354.251	1
1.354.310	21/A,21/B,22/A,23/A,33,34
1.354.375	46
1.354.381 – M10	23/A,34
1.354.382 – M12	23/A,34
1.354.397	23/A,24, 24/A,24/A1,24/A2,24/A3, 24/A4, 34
1.354.511	24,24/A,24/A1,24/A2, 24/A3, 24/A4
1.354.565	8,9
1.354.571	21/A,23/A,33,34
1.354.583	65
1.354.660	14,14/B,15/A
1.354.663	14,14/B
1.354.667	21/A,23/A,33,34
1.355.038	13/A
1.355.039	13/A
1.355.403	14/A, 14/B, 15/A
1.355.448	8,9
1.355.449	8,9
1.355.452	8,9
1.355.464	8,10.51
1.355.465	8,10
1.355.468	8,10
1.355.473	51
1.355.478	51
1.355.478	51
1.355.481	24/A,24/A1,24/A2,24/A3, 24/A4
1.355.489	29/A,29/B,58/A, 63
1.355.553	51

Part number	Page number
1.355.609	1
1.355.610	1
1.355.690	1
1.355.692	1
1.355.693	1
1.355.695	1
1.355.697	1
1.355.698	1
1.355.700	1
1.355.701	1
1.355.702	1
1.355.706	1
1.355.707	1
1.355.709	1
1.355.710	2, 2/A
1.355.909	14,14/B,15/A
1.355.920	51
1.355.921	51
1.355.966	37,51
1.355.995	43
1.356.016	43, 43/A
1.356.019	43
1.356.060	29/B
1.356.077	43
1.356.078	43
1.356.079	43
1.356.108	1
1.356.118	24, 24/A, 24/A1, 24/A2, 24/A3, 24/A4
1.356.132	43
1.356.203	1
1.356.208	60
1.356.455	8, 10
1.356.529	2, 2/A
1.372.005	1
1.372.016	1
1.373.017	1
1.372.028	1
1.372.029	1
1.372.040	2/A
1.372.041	2/A
1.372.086	64
1.372.100	63
1.372.104	63
1.372.105	63
1.372.228	51
1.372.229	51
1.372.230	51
1.372.239	1

Part number	Page number
1.372.245	2/A
1.372.246	2/A
1.372.247	2/A
1.372.248	2/A
1.372.250	2/A
1.372.251	2/A
1.372.268	24/A1,24/A3,24/A4
1.372.284	1
1.372.314	2, 2/A
1.372.315	2, 2/A
1.372.352	21/B, 23/A
1.372.371	2/A
1.372.373	28
1.372.374	28
1.372.434	3
1.372.435	2/A
1.372.439	2/A
1.372.441	2/A
1.372.442	2/A
1.372.443	2/A
1.372.444	2/A
1.373.045	8, 9, 10
1.373.046	8, 9, 10
1.373.070	6
1.373.082	16/B
1.373.083	16/B
1.373.084	19/A
1.373.085	19/A
1.373.088	8
1.373.100	6
1.373.113	16/B
1.373.114	16/B
1.373.115	16/B
1.373.116	16/B
1.373.117	19/A
1.373.118	19/A
1.373.121	8
1.373.139	16/A
1.373.140	16/A
1.373.141	16/A
1.373.142	16/A
1.373.143	16/A
1.373.143	16/A
1.373.144	16/A
1.373.145	16/A
1.373.147	16/A
1.373.148	21/A
1.373.151	21/A

Part number	Page number
1.373.152	21/A
1.373.153	21/A
1.373.155	16/A
1.373.156	16/A
1.373.158	16/A
1.373.167	16/A
1.373.168	16/A
1.373.169	16/A
1.373.170	16/A
1.373.275	56
1.373.276	56
1.373.277	56
1.373.278	56
1.373.279	56
1.373.280	56
1.373.281	56
1.373.282	56
1.373.283	56
1.373.284	56
1.373.285	56
1.373.286	56
1.373.287	56
1.373.288	56
1.373.289	56
1.373.290	56
1.373.293	17/A
1.373.294	17/A
1.373.295	17/A
1.373.296	17/A
1.373.297	17/A
1.373.298	17/A
1.373.299	17/A
1.373.300	17/A
1.373.301	17/A
1.373.302	17/A
1.373.304	24/A2,24/A4
1.373.305	24/A2,24/A4
1.373.306	24/A4
1.373.307	24/A4
1.373.308	24/A4
1.373.309	24/A4
1.373.310	24/A4
1.373.311	24/A4
1.373.312	24/A4
1.373.313	24/A1, 24/A2,24/A3,24/A4
1.373.314	24/A1,24/A2,24/A3,24/A4
1.373.315	24/A1,24/A2, 24/A3,24/A4
1.373.316	24/A4

Part number	Page number
1.373.317	24/A4
1.373.318	24/A4
1.373.319	24/A4
1.373.320	24/A4
1.373.321	24/A4
1.373.322	24/A4
1.373.323	24/A4
1.373.324	24/A4
1.373.325	24/A4
1.373.326	24/A4
1.373.327	24/A1,24/A2,24/A3,24/A4
1.373.328	24/A1,24/A3,24/A4
1.373.329	24/A1,24/A3,24/A4
1.373.330	24/A1,24/A3,24/A4
1.373.331	24/A1,24/A3,24/A4
1.373.332	24/A4
1.373.336	23/A
1.373.337	23/A
1.373.339	23/A
1.373.341	23/A
1.373.354	7
1.373.355	7
1.373.356	7
1.373.387	5/A, 48
1.373.426	49
1.373.449	24/A,24/A1,24/A2,24/A3, 24/A4, 24/B
1.373.462	9
1.373.463	9
1.373.464	9
1.373.465	9
1.373.470	17/A
1.373.471	17/A
1.373.472	17/A
1.373.473	17/A
1.373.474	17/A
1.373.475	17/A
1.373.478	15/A
1.373.483	21/A
1.373.487	21/A, 23/A
1.373.488	24/A,24/A1,24/A2,24/A3, 24/A4, 24/B
1.373.490	21/A
1.373.510	7
1.373.511	7
1.373.512	7
1.373.513	7
1.373.542	17/A
1.373.543	17/A

Part number	Page number
1.373.544	17/A
1.373.545	17/A
1.373.546	17/A
1.373.547	17/A
1.373.548	17/A
1.373.549	17/A
1.373.550	17/A
1.373.551	17/A
1.373.555	9
1.373.556	19/A
1.373.557	19/A
1.373.559	9
1.373.576	24/A3
1.373.577	24/A1,24/A2,24/A3
1.373.578	24/A3
1.373.578	24/A3
1.373.580	24/A3
1.373.581	24/A3
1.373.583	24/A1,24/A2,24/A3
1.373.582	24/A3
1.373.584	24/A1,24/A2,24/A3
1.373.585	24/A, 24/A1,24/A2,24/A3, 24/A4,24/B
1.373.586	7
1.373.590	23/A
1.373.591	23/A
1.373.592	23/A
1.373.593	23/A
1.373.595	23/A
1.373.596	23/A
1.373.612	23/A
1.373.613	23/A
1.373.614	23/A
1.373.615	23/A
1.373.619	16/A,16/B,17/A
1.373.623	15/A
1.373.648	18/A
1.373.656	2/A
1.373.662	7
1.373.663	7
1.373.664	7
1.373.670	49
1.373.671	49
1.373.675	2/A
1.373.676	2/A
1.373.677	2/A
1.373.678	2/A
1.373.681	2/A
1.373.682	2/A

Part number	Page number
1.373.690	1
1.373.691	1
1.373.692	1
1.373.693	1
1.373.694	1
1.373.697	1
1.373.699	1
1.373.700	1
1.373.703	1
1.373.704	1
1.373.705	1
1.373.712	1
1.373.714	1
1.373.715	1
1.373.718	1
1.373.725	18/A, 24/A1,24/A2,24/A3,24/A4, 24/B
1.373.730	18/A
1.373.732	19/A
1.373.733	19/A
1.373.734	49
1.373.738	49
1.373.740	49
1.373.742	7
1.373.749	21/A, 23/A
1.373.751	6, 7
1.373.767	22/A
1.373.768	22/A
1.373.772	22/A
1.373.773	22/A
1.373.774	24/A1
1.373.775	24/A1
1.373.776	24/A1
1.373.777	24/A1
1.373.778	7
1.373.779	7
1.373.780	7
1.373.810	17/A
1.373.811	17/A
1.373.812	17/A
1.373.813	17/A
1.373.814	17/A
1.373.825	7
1.373.826	7
1.373.827	7
1.373.828	7
1.373.829	7
1.373.847	17/A

Part number	Page number
1.373.870	3
1.373.871	3
1.373.876	10
1.373.877	10
1.373.878	10
1.373.882	10
1.373.883	10
1.373.884	10
1.373.885	10
1.373.890	14/A, 15/A
1.373.898	2, 2/A
1.373.899	24/A2
1.373.900	24/A2
1.373.901	24/A2
1.373.902	24/A2
1.373.903	24/A2
1.373.907	24/A2
1.373.908	24/A2
1.373.909	19/A
1.373.910	19/A
1.373.911	19/A
1.373.912	19/A
1.373.917	24/A2
1.373.919	19/A
1.373.920	19/A
1.373.923	19/A
1.373.924	19/A
1.373.927	19/A
1.373.928	19/A
1.373.929	19/A
1.373.933	19/A
1.373.934	19/A
1.373.937	19/A
1.373.938	19/A
1.373.952	1
1.373.953	1
1.373.954	1
1.373.957	17/A
1.373.958	17/A
1.373.959	17/A
1.373.960	17/A
1.373.961	17/A
1.373.962	17/A
1.373.963	17/A
1.373.964	17/A
1.373.965	17/A
1.373.966	17/A
1.373.967	17/A

Part number	Page number
1.373.970	24/A2
1.373.971	24/A2
1.373.973	24/A2
1.373.974	24/A2
1.373.975	24/A2
1.373.976	17/A
1.373.977	17/A
1.373.978	17/A
1.373.979	17/A
1.373.980	17/A
1.373.981	17/A
1.373.982	17/A
1.373.983	17/A
1.373.984	17/A
1.373.985	17/A
1.373.986	17/A
1.373.991	24/A,24/A1,24/A2,24/A3, 24/A4,24/B
1.373.992	19/A
1.373.995	17/A
1.373.996	17/A
1.373.997	22/A
1.373.998	22/A
1.375.019	5/A,48,7
1.375.025	5/A,48
1.375.134	7
1.375.138	7
1.375.144	7, 24/A,24/A1,24/A3,24/A4
1.375.180	7
1.375.181	7
1.375.182	7
1.375.192	7
1.375.203	8,9,10
1.375.415	1
1.375.417	1
1.375.428	8,9,10
1.375.429	8,9,10
1.375.430	8,9,10
1.375.431	8,9,10
1.375.497	18/A
1.375.615	24/A1
1.375.659	24
1.375.669	24, 24/A,24/A1,24/A2,24/A3, 24/A4, 24/B
1.375.687	5/A,48
1.375.688	5/A,48
1.375.689	5/A,48
1.375.691	5/A

Part number	Page number
1.375.692	5/A
1.375.693	5/A,48
1.375.694	5/A,48
1.375.695	5/A,48
1.375.696	5/A,48
1.375.697	5/A,48
1.375.698	5/A,48
1.375.699	5/A,48
1.375.700	5/A,48
1.375.701	13/A
1.375.702	13/A
1.375.703	5/A,48
1.375.706	5/A,48
1.375.708	5/A
1.375.710	5/A,48
1.375.712	5/A,48
1.375.717	5/A,48
1.375.722	5/A,48
1.375.723	5/A,48
1.375.743	13/A
1.375.744	5/A,13/A,48
1.375.746	5/A,48
1.375.752	13/A
1.375.754	5/A,48
1.375.755	11/A,44,49
1.375.756	4
1.375.757	4
1.375.758	4
1.375.760	4
1.375.761	4
1.375.762	4
1.375.772	18/A,19/A
1.375.792	12
1.375.800	11/A,49
1.375.801	11/A,49
1.375.813	11/A,49
1.375.819	11/A,49
1.375.822	11/A,49
1.375.832	11/A,49
1.375.833	11/A,49
1.375.836	5/A,48
1.375.913	9
1.375.947	11/A,49
1.375.955	5/A,48
1.375.957	21/A,21/B,33
1.375.958	21/A,21/B,33
1.375.965	8,9,10
1.375.966	8,9,10
1.375.967	8,9,10
1.375.968	8,9,10
1.375.969	8,9,10
1.375.973	2, 2/A
1.375.974	2, 2/A
1.376.000	18/A
1.376.003	18/A
1.376.006	18/A
1.376.007	16/A,17/A
1.376.020	8,9,10
1.376.039	23/A
1.376.040	23/A
1.376.041	23/A
1.376.042	23/A
1.376.043	23/A,34
1.376.044	23/A,34
1.376.067	11/A,49
1.376.068	2,2/A
1.376.069	2,2/A
1.376.070	2,2/A
1.376.071	3
1.376.072	3
1.376.073	3
1.376.074	3
1.376.075	3
1.376.076	3
1.376.077	3
1.376.078	3
1.376.079	3
1.376.085	33
1.376.089	33,34
1.376.093	22/A
1.376.093.1	22/A
1.376.093.2	22/A
1.376.093.3	22/A
1.376.093.4	22/A
1.376.093.5	22/A
1.376.093.6	22/A
1.376.093.10	22/A
1.376.094	22/A
1.376.094.1	22/A
1.376.094.2	22/A
1.376.094.3	22/A
1.376.094.4	22/A
1.376.094.5	22/A
1.376.094.6	22/A
1.376.094.10	22/A
1.376.095	22/A

Part number	Page number
1.376.095.1	22/A
1.376.095.2	22/A
1.376.095.3	22/A
1.376.095.4	22/A
1.376.095.5	22/A
1.376.095.6	22/A
1.376.095.7	22/A
1.376.095.8	22/A
1.376.095.9	22/A
1.376.096	22/A
1.376.096.1	22/A
1.376.096.2	22/A
1.376.096.3	22/A
1.376.096.4	22/A
1.376.096.5	22/A
1.376.096.6	22/A
1.376.096.7	22/A
1.376.096.8	22/A
1.376.096.9	22/A
1.376.097	21/A, 23/A
1.376.097.1	21/A, 23/A
1.376.097.2	21/A, 23/A
1.376.097.3	21/A, 23/A
1.376.097.4	21/A, 23/A
1.376.097.5	21/A, 23/A
1.376.099	21/A, 23/A, 33,34,
1.376.099.1	21/A, 23/A, 33, 34
1.376.099.2	21/A, 23/A, 33, 34
1.376.099.3	21/A, 23/A, 33, 34
1.376.099.4	21/A, 23/A, 33, 34
1.376.099.5	21/A, 23/A, 33, 34
1.376.099.6	21/A, 23/A
1.376.100	33,34
1.376.104	18/A
1.376.105	18/A
1.376.122	6
1.376.123	6
1.376.124	6
1.376.125	6
1.376.126	6
1.376.127	16/A,16/B,17/A
1.376.129	33,34
1.376.130	33,34
1.376.131	16/A,16/B,17/A
1.376.214	8
1.376.215	8
1.376.216	8
1.376.217	8

Part number	Page number
1.376.228	8
1.376.229	8
1.376.230	8
1.376.231	8
1.376.232	8,9,10
1.376.233	8,9,10
1.376.238	8,9,10
1.376.241	8,10
1.376.278	7,24, 24/A,24/A1,24/A3,24/A4
1.376.292	7
1.376.293	7
1.376.294	7
1.376.295	7
1.376.296	7
1.376.320	9
1.376.321	9
1.376.322	9
1.376.323	9
1.376.324	10
1.376.325	10
1.376.326	10
1.376.363	9
1.376.364	9
1.376.365	9
1.376.369	9
1.376.370	9
1.376.371	7,9,10
1.376.372	7,9,10
1.376.373	7,9,10
1.376.374	7,9,10
1.376.377	10
1.376.378	10
1.376.379	10
1.376.380	10
1.376.382	7
1.376.385	7
1.376.412	2
1.376.413	2
1.376.416	2
1.376.417	2
1.376.420	2
1.376.421	2
1.376.424	2
1.376.425	2
1.376.430	2
1.376.431	2
1.376.434	2
1.376.435	2

Part number	Page number
1.376.436	2, 2/A
1.376.444	2, 2/A
1.376.445 – M10x30	2, 2/A
1.376.446	2, 2/A
1.376.448	7
1.376.484	7
1.376.485	7
1.376.490	14,14/B,15/A
1.376.491	6,7
1.376.501	14
1.376.502	14,14/B,15/A
1.376.503	14,14/B,15/A
1.376.504	14
1.376.505	14,14/B
1.376.506	14,14/B,15/A
1.376.516	15/A
1.376.517	14,14/B,15/A
1.376.519	15/A
1.376.523	25
1.376.536	25
1.376.537	25
1.376.538	25
1.376.539	25
1.376.540	25
1.376.541	25
1.376.542	25
1.376.544	25
1.376.545	25
1.376.547	25
1.376.548	25
1.376.561	7
1.376.562	15/A
1.376.564	7
1.376.565	7
1.376.573	7
1.376.599	16/A,16/B,17/A
1.376.600	16/A,16/B,17/A
1.376.629	7
1.376.633	7
1.376.634	7
1.376.635	7
1.376.662	22/A
1.376.663	22/A
1.376.676	22/A
1.376.677	22/A
1.376.691	20
1.376.699	20
1.376.700	21/A

Part number	Page number
1.376.700.1	21/A
1.376.700.2	21/A
1.376.700.3	21/A
1.376.700.4	21/A
1.376.700.5	21/A
1.376.700.6	21/A
1.376.701	20
1.376.729	20
1.376.747	21/A,21/B,23/A,33,34
1.376.752	2, 2/A
1.376.776	34
1.376.777	34
1.376.783	3, 13/A
1.376.793	21/A,23/A,33,34
1.376.795	24/A, 24/B
1.376.796	24, 24/A
1.377.000	6,7
1.377.005	6,7
1.377.013	23/A,34
1.377.015	23/A,34
1.377.018	23/A,34
1.377.019	23/A,34
1.377.020	23/A,34
1.377.021	24/A2
1.377.022	23/A,34
1.377.023	23/A
1.377.024	23/A
1.377.025	23/A
1.377.026	23/A
1.377.038	24
1.377.048	15/A
1.377.055	1
1.377.061	24, 24/A,24/A1,24/A2,24/A3, 24/A4
1.377.062	24, 24/A,24/A1,24/A2, 24/A3,24/A4
1.377.063	24, 24/A
1.377.064	24, 24/A
1.377.065	24, 24/A
1.377.066	24, 24/A
1.377.068	24
1.377.069	24
1.377.070	24
1.377.071	24
1.377.072	24, 24/A,24/A1,24/A2,24/A3,
1.377.073	24,24/A,24/A1,24/A2, 24/A3

Part number	Page number
1.377.074	24, 24/A,24/A1,24/A3
1.377.075	24
1.377.076	24,24/A,24/A1,24/A2, 24/A3
1.377.077	24
1.377.078	24
1.377.086	22/A
1.377.087	22/A
1.377.088	11/A,44,49
1.377.089	24, 24/A
1.377.093	5/A,48
1.377.095	13/A
1.377.100	7
1.377.102	7
1.377.105	2, 2/A
1.377.106	2, 2/A
1.377.108	7
1.377.119	9
1.377.123	15/A
1.377.125	15/A
1.377.137	44
1.377.138	44
1.377.142	44
1.377.144	44
1.377.145	44
1.377.146	44
1.377.161	44
1.377.162	44
1.377.163	44
1.377.164	8, 9, 10
1.377.171	7
1.377.181	7
1.377.183	9
1.377.192	34
1.377.193	34
1.377.196	34
1.377.199	23/A,34
1.377.200	23/A,34
1.377.201	23/A
1.377.202	23/A
1.377.213	23/A,34
1.377.214	23/A,34
1.377.215	23/A,34
1.377.216	23/A,34
1.377.219	33,34
1.377.222	7
1.377.225	33,34
1.377.229	33
1.377.243	48

Part number	Page number
1.377.244	48
1.377.247	47
1.377.250	47
1.377.251	11/A,29/A,29/B,47,49
1.377.253	31
1.377.258	12
1.377.265	3
1.377.266	49
1.377.267	49
1.377.268	4
1.377.271	8, 9, 10
1.377.272	8, 9, 10
1.377.274	31
1.377.275	31
1.377.288	31
1.377.297	12,47
1.377.298	12,47
1.377.299	12
1.377.300	12
1.377.338	16/A,17/A
1.377.339	16/A
1.377.340	16/A
1.377.341	16/A,17/A
1.377.342	16/A
1.377.343	16/A
1.377.344	16/A
1.377.345	16/A
1.377.346	16/A
1.377.347	16/A
1.377.348	16/A
1.377.349	16/A
1.377.350	17/A
1.377.351	17/A
1.377.354	17/A
1.377.355	17/A
1.377.356	17/A
1.377.357	17/A
1.377.362	16/A,17/A
1.377.363	16/A,17/A
1.377.364	16/A,17/A
1.377.365	16/A,17/A
1.377.372	16/A,16/B,17/A
1.377.380	21/A,23/A
1.377.380.1	21/A, 23/A
1.377.380.2	21/A, 23/A
1.377.380.3	21/A, 23/A
1.377.380.4	21/A, 23/A
1.377.380.5	21/A, 23/A

Part number	Page number
1.377.380.6	21/A, 23/A
1.377.380.10	21/A, 23/A
1.377.382	45
1.377.382.1	45
1.377.382.3	45
1.377.382.4	45
1.377.382.5	45
1.377.382.6	45
1.377.382.10	45
1.377.383	45
1.377.383.1	45
1.377.383.2	45
1.377.383.3	45
1.377.383.4	45
1.377.383.5	45
1.377.383.6	45
1.377.383.10	45
1.377.392	12,47
1.377.393	12,47
1.377.394	11/A
1.377.395	11/A
1.377.396	11/A
1.377.397	11/A
1.377.398	11/A,49
1.377.399	11/A,49
1.377.406	12
1.377.407	12
1.377.409	6,7
1.377.410	6,7
1.377.428	45
1.377.429	45
1.377.432	45
1.377.433	45
1.377.453	6,7,8,9,10
1.377.454	6,7,8,9,10
1.377.460	6, 7
1.377.461	6, 7
1.377.462	21/A,23/A
1.377.465	21/A,23/A
1.377.466	21/A,23/A
1.377.470	6,7
1.377.478	6,7
1.377.479	6,7
1.377.488	7
1.377.489	7
1.377.503	9
1.377.504	9
1.377.508	15/A

Part number	Page number
1.377.515	17/A
1.377.516	17/A
1.377.517	17/A
1.377.520	24
1.377.521	24
1.377.522	24
1.377.530	65
1.377.533	21/A
1.377.533.1	21/A
1.377.533.2	21/A
1.377.533.3	21/A
1.377.533.4	21/A
1.377.533.5	21/A
1.377.533.6	21/A
1.377.533.10	21/A
1.377.534	23/A
1.377.534.1	23/A
1.377.534.2	23/A
1.377.534.3	23/A
1.377.534.4	23/A
1.377.534.5	23/A
1.377.534.6	23/A
1.377.535	55
1.377.535.1	55
1.377.535.2	55
1.377.535.3	55
1.377.535.5	55
1.377.535.6	55
1.377.535.7	55
1.377.535.8	55
1.377.535.9	55
1.377.536	55
1.377.536.1	55
1.377.536.2	55
1.377.536.3	55
1.377.536.5.	55
1.377.536.6	55
1.377.536.7	55
1.377.536.8	55
1.377.536.9	55
1.377.544	6
1.377.558	16/A
1.377.559	16/A
1.377.593	24, 24/A
1.377.595	7
1.377.596	7
1.377.626	7
1.377.627	7

Part number	Page number
1.377.672	61
1.377.676	15/A
1.377.687	8,9,10
1.377.688	17/A
1.377.689	17/A
1.377.699	43, 43/A
1.377.700	17/A
1.377.701	17/A
1.377.709	2
1.377.710	2
1.377.713	2
1.377.714	2
1.377.715	2
1.377.716	2
1.377.722	5/A,48
1.377.725	8,9,10
1.377.726	8,9,10
1.377.729	11/A
1.377.730	11/A
1.377.731	5/A,48
1.377.732	5/A,48
1.377.733	5/A,48
1.377.734	5/A,48
1.377.735	12
1.377.738	21/A
1.377.741	21/A, 23/A
1.377.744	21/A, 23/A
1.377.747	21/A, 23/A
1.377.748	21/A, 23/A
1.377.751	21/A, 23/A
1.377.754	11/A,49
1.377.762	11/A,49
1.377.763	13/A
1.377.766	13/A
1.377.767	13/A
1.377.769	13/A
1.377.770	13/A
1.377.775	5/A,48
1.377.776	13/A
1.377.777	13/A
1.377.778	13/A
1.377.779	13/A
1.377.780	13/A
1.377.781	13/A
1.377.782	13/A
1.377.783	13/A
1.377.787	13/A
1.377.788	11/A,49

Part number	Page number
1.377.791	11/A,49
1.377.793	11/A,49
1.377.799	13/A
1.377.800	47
1.377.801	47
1.377.802	49
1.377.803	49
1.377.804	15/A
1.377.805	15/A
1.377.806	15/A
1.377.807	15/A
1.377.808	15/A
1.377.809	14/A,14/B,15/A
1.377.810	15/A
1.377.811	14/B,15/A
1.377.812	15/A
1.377.813	15/A
1.377.816	49
1.377.817	49
1.377.834	18/A
1.377.837	18/A
1.377.839	18/A
1.377.842	19/A
1.377.843	19/A
1.377.844	19/A
1.377.845	19/A
1.377.846	19/A
1.377.847	19/A
1.377.852	19/A
1.377.853	19/A
1.377.855	21/A
1.377.861	18/A
1.377.862	21/A,21/B,23/A
1.377.864	16/A,17/A
1.377.865	16/A,17/A
1.377.866	16/A,17/A
1.377.867	16/A
1.377.868	16/A
1.377.869	16/A
1.377.870	16/A
1.377.871	16/A
1.377.872	16/A
1.377.873	16/A
1.377.874	16/A
1.377.875	16/A,16/A
1.377.876	16/A
1.377.877	16/A
1.377.878	16/A

Part number	Page number
1.377.879	16/A
1.377.880	16/A
1.377.881	17/A
1.377.882	17/A
1.377.883	17/A
1.377.884	17/A
1.377.885	17/A
1.377.886	17/A
1.377.891	17/A
1.377.892	17/A
1.377.902	21/A,21/B,22/A,23/A
1.377.905	7
1.377.960	22/A
1.377.961	22/A
1.377.967	22/A
1.377.968	22/A
1.377.969	22/A
1.377.970	22/A
1.377.975	22/A, 23/A
1.377.976	22/A, 23/A
1.377.983	11/A,49
1.377.984	11/A,49
1.377.986	13/A
1.377.989	11/A,49
1.377.990	11/A,49
1.377.991	7
1.377.992	7
1.378.048	23/A
1.378.049	23/A
1.378.053	21/A, 23/A
1.378.056	23/A
1.378.057	23/A
1.378.060	16/A
1.378.072	43
1.378.075	43
1.378.076	7
1.378.098	7
1.378.100	7
1.378.105	7
1.378.106	7
1.378.126	7
1.378.128	2,2/A
1.378.129	2,2/A
1.378.136	2
1.378.137	2
1.378.140	2,2/A
1.378.141	2,2/A
1.378.144	2,2/A

Part number	Page number
1.378.145	2,2/A
1.378.148	2,2/A
1.378.149	2,2/A
1.378.150	2
1.378.151	2
1.378.154	2,2/A
1.378.155	2,2/A
1.378.156	2
1.378.157	2
1.378.164	2
1.378.165	2
1.378.166	2
1.378.167	2
1.378.168	2,2/A
1.378.169	2,2/A
1.378.170	2
1.378.171	2
1.378.173	7
1.378.178	11/A,49
1.378.179	7
1.378.199	7
1.378.224	17/A
1.378.225	17/A
1.378.226	7
1.378.227	7
1.378.269	21/A
1.378.282	7
1.378.286	7
1.378.287	7
1.378.292	20
1.378.293	20
1.378.296	16/A,17/A
1.378.297	16/A,17/A
1.378.298	16/A,17/A
1.378.299	16/A
1.378.300	16/A
1.378.301	16/A
1.378.302	16/A
1.378.303	16/A
1.378.304	16/A
1.378.305	16/A,16/A
1.378.306	16/A
1.378.307	16/A
1.378.308	16/A
1.378.309	16/A
1.378.310	16/A
1.378.311	17/A
1.378.312	17/A

Part number	Page number
1.378.313	17/A
1.378.314	17/A
1.378.315	17/A
1.378.316	17/A
1.378.317	17/A
1.378.318	17/A
1.378.319	17/A
1.378.320	17/A
1.378.321	17/A
1.378.322	17/A
1.378.323	17/A
1.378.324	17/A
1.378.325	17/A
1.378.326	17/A
1.378.327	17/A
1.378.328	17/A
1.378.334	17/A
1.378.335	17/A
1.378.336	17/A
1.378.337	17/A
1.378.338	17/A
1.378.339	17/A
1.378.340	17/A,16/A
1.378.341	17/A,16/A
1.378.342	17/A
1.378.343	17/A
1.378.344	13/A
1.378.345	17/A
1.378.346	17/A
1.378.347	13/A
1.378.348	17/A
1.378.349	17/A
1.378.350	17/A
1.378.351	17/A
1.378.353	17/A
1.378.354	17/A
1.378.355	17/A
1.378.356	17/A
1.378.360	16/A
1.378.361	16/A
1.378.372	24, 24/A
1.378.373	24, 24/A
1.378.374	24,24/A
1.378.376	24/A
1.378.377	24/A
1.378.378	24/A
1.378.379	24/A
1.378.380	24/A

Part number	Page number
1.378.381	24/A
1.378.382	24/A
1.378.389	7,32
1.378.390	20
1.378.391	20
1.378.399	14/B
1.378.400	15/A,14/A
1.378.403	7
1.378.407	7
1.378.409	7
1.378.410	7
1.378.411	7
1.378.415	7, 24/A,24/A2,
1.378.428	12
1.378.429	12
1.378.430	12
1.378.440	47
1.378.441	47
1.378.443	6
1.378.444	6
1.378.446	43/A
1.378.448	8, 9, 10
1.378.449	8, 9, 10
1.378.453	8, 9, 10
1.378.472	49.11/A
1.378.474	49, 11/A
1.378.475	7
1.378.493	43/A
1.378.497	43/A
1.378.501	43/A
1.378.502	4
1.378.503	4
1.378.521	8, 9, 10
1.378.522	24/A,24/A1,24/A2,24/A3, 24/A4
1.378.523	8, 9, 10
1.378.524	8, 9, 10
1.378.526	24, 24/A,24/A1,24/A2,24/A3, 24/A4
1.378.528	28
1.378.530	24, 24/A
1.378.531	6
1.378.532	6
1.378.533	6
1.378.534	6
1.378.574	21/A,23/A
1.378.575	21/A,23/A
1.378.576	21/A

Part number	Page number
1.378.577	21/A
1.378.578	21/A
1.378.579	21/A
1.378.582	21/A
1.378.612	24/A,24/A1,A24/A2,24/A3, 24/A4
1.378.613	24/A
1.378.614	24/A,24/A1
1.378.615	24/A
1.378.616	24/A,24/A1
1.378.617	24/A
1.378.618	24/A
1.378.619	24/A, 24/A1,24/A3,24/A4
1.378.632	24/A
1.378.637	24/A
1.378.638	24/A
1.378.639	24/A,24/A2
1.378.641	24/A
1.378.643	24/A
1.378.643	24/A
1.378.644	24/A
1.378.645	24/A
1.378.646	24/A
1.378.647	24/A
1.378.648	24/A
1.378.679	7
1.378.685	6, 7
1.378.689	6, 7,
1.378.690	6, 7
1.378.696	18/A,24/A,24/A1,24/A2, 24/A3,24/A4
1.378.697	13/A
1.378.751	16/A
1.378.752	16/A
1.378.760	2, 2/A
1.378.764	16/A
1.378.765	16/A
1.378.791	16/A
1.378.792	16/A
1.378.793	16/A
1.378.795	16/A
1.378.796	16/A
1.378.797	16/A
1.378.798	16/A
1.378.799	16/A
1.378.800	16/A
1.378.801	16/A
1.378.802	16/A
1.378.803	16/A

Part number	Page number
1.378.804	16/A
1.378.805	16/A
1.378.806	16/A
1.378.807	16/A
1.378.808	55
1.378.809	55
1.378.822	55
1.378.825	55
1.378.830	55
1.378.831	55
1.378.835	55
1.378.836	24/A,24/A1,24/A2, 24/A3
1.378.837	24/A, 24/A1,24/A2,24/A3, 24/A4
1.378.842	24/A
1.378.843	24/A
1.378.844	24/A,24/A1, 24/A2,24/A3
1.378.845	24/A
1.378.846	24/A
1.378.847	53
1.378.851	54
1.378.852	54
1.378.853	54
1.378.854	24/A
1.378.855	54
1.378.856	54
1.378.857	24/A
1.378.858	55,56
1.378.859	55,56
1.378.860	55,56
1.378.861	56
1.378.866	6
1.378.890	1
1.378.896	15/A
1.378.897	15/A
1.378.920	53
1.378.935	53
1.378.936	53
1.378.937	53
1.378.963	16/A
1.378.964	16/A, 16/B
1.378.969	16/A,16/B
1.378.970	16/A, 16/B
1.378.971	16/A
1.378.972	16/A,16/B
1.378.973	16/A, 16/B, 17/A
1.378.974	16/A, 16/B, 17/A
1.378.975	16/A, 16/B
1.378.976	16/A

Part number	Page number
1.378.977	16/A, 16/B
1.378.978	16/A, 16/B
1.378.979	16/A, 16/B
1.378.980	16/A
1.378.985	2, 2/A
1.378.987	2, 2/A
1.378.988	6, 7
1.378.989	6, 7
1.378.990	6
1.378.997	2, 2/A
1.378.999	2, 2/A
1.379.001	53
1.379.002	53
1.379.003	53
1.379.004	53
1.379.005	53
1.379.006	53
1.379.007	53
1.379.008	53
1.379.009	53
1.379.010	53
1.379.011	53
1.379.013	53
1.379.014	53
1.379.015	53
1.379.017	53
1.379.034	16/B
1.379.035	16/B
1.379.036	16/B
1.379.037	16/B
1.379.038	16/B
1.379.041	16/B
1.379.042	16/B
1.379.043	16/B
1.379.060	2, 2/A
1.379.062	2, 2/A
1.379.063	2, 2/A
1.379.064	2, 2/A
1.379.065	24/A2,24/A3
1.379.066	24/A2, 24/A3
1.379.067	24/A2,24/A3
1.379.071	14/A
1.379.075	49
1.379.081	4
1.379.082	4
1.379.084	8
1.379.087	8
1.379.096	14/B

Part number	Page number
1.379.099	16/A,16/B, 17A
1.379.105	32
1.379.138	31/A
1.379.141	7
1.379.142	31
1.379.143	31
1.379.146	2, 2/A
1.379.151	23/A
1.379.152	23/A
1.379.153	4
1.379.155	6
1.379.156	6
1.379.157	6
1.379.158	6
1.379.159	6
1.379.292	56
1.379.295	53
1.379.297	53
1.379.298	13/A
1.379.299	7
1.379.306	54
1.379.086	53
1.379.391	2,2/A
1.379.392	2,2/A
1.379.394	29/A,29/B,58/A,58/B,59, 60,63
1.379.396	2,2/A
1.379.397	2,2/A
1.379.398	29/A
1.379.399	29/A,29/B
1.379.415	53
1.379.421	16/A
1.379.422	16/A
1.379.423	16/A
1.379.424	16/A
1.379.425	44
1.379.440	6, 7
1.379.443	58/A
1.379.456	24/A,24/A1,24/A2, 24/A3, 24/A4
1.379.457	24/A, 24/A1,24/A2,24/A3, 24/A4
1.379.458	24/A,24/A1, 24/A2,24/A3 24/A4,24/B
1.379.465	13/A
1.379.472	29/A,29/B,58/A, 58/B,59,60,63
1.379.473	29/B
1.379.474	29/A
1.379.475	58/A

Part number	Page number
1.379.476	8,9,10
1.379.477	24/A,24/A1,24/A2,24/A3, 24/A4, 61
1.379.485	8,10
1.379.487	8,10
1.379.488	8,10
1.379.489	21/B
1.379.490	21/B
1.379.494	21/B
1.379.495	21/B
1.379.496	21/B
1.379.499	21/B
1.379.500	21/B
1.379.500.1	21/B
1.379.500.2	21/B
1.379.500.3	21/B
1.379.500.4	21/B
1.379.500.5	21/B
1.379.500.10	21/B
1.379.501	21/B
1.379.501.1	21/B
1.379.501.2	21/B
1.379.501.3	21/B
1.379.501.4	21/B
1.379.501.5	21/B
1.379.501.10	21/B
1.379.502	21/B
1.379.502.1	21/B
1.379.502.2	21/B
1.379.502.3	21/B
1.379.502.4	21/B
1.379.502.5	21/B
1.379.502.10	21/B
1.379.503	21/B
1.379.503.1	21/B
1.379.503.2	21/B
1.379.503.3	21/B
1.379.503.4	21/B
1.379.503.5	21/B
1.379.503.10	21/B
1.379.507	23/A
1.379.507.1	23/A
1.379.507.2	23/A
1.379.507.3	23/A
1.379.507.4	23/A
1.379.507.5	23/A
1.379.509	21/A, 23/A
1.379.509.1	21/A, 23/A
1.379.509.2	21/A, 23/A
1.379.509.3	21/A, 23/A
1.379.509.4	21/A, 23/A
1.379.509.5	21/A, 23/A
1.379.510	21/B
1.379.513	21/B
1.379.516	21/B
1.379.523	56
1.379.524	56
1.379.525	56
1.379.526	56
1.379.527	56
1.379.528	56
1.379.529	56
1.379.530	56
1.379.531	56
1.379.532	56
1.379.534	16/A,16/B,17/A
1.379.535	16/B
1.379.536	35,42
1.379.537	56
1.379.538	56
1.379.539	56
1.379.542	56
1.379.543	8,10
1.379.545	56
1.379.550	8,10
1.379.551	56
1.379.552	56
1.379.553	56
1.379.554	56
1.379.555	56
1.379.556	56
1.379.560	8,10
1.379.561	8,10
1.379.562	56
1.379.563	56
1.379.564	56
1.379.565	56
1.379.566	56
1.379.567	56
1.379.568	56
1.379.569	56
1.379.570	56
1.379.571	56
1.379.572	56
1.379.573	56
1.379.574	56
1.379.575	56

Part number	Page number
1.379.576	56
1.379.578	56
1.379.586	14/B
1.379.587	14/B
1.379.588	14/B, 15/A
1.379.589	14/B
1.379.590	16/B
1.379.591	16/B
1.379.592	16/B
1.379.593	16/B
1.379.594	16/B
1.379.595	16/B
1.379.596	16/B
1.379.597	16/B
1.379.598	16/B
1.379.599	16/B
1.379.600	6
1.379.624	19/A
1.379.625	19/A
1.379.629	8,10
1.379.630	56
1.379.631	25/A
1.379.632	25/A
1.379.634	2
1.379.635	26,27
1.379.636	8
1.379.637	8
1.379.643	58/B, 59, 60
1.379.644	16/B
1.379.645	16/B
1.379.646	16/B
1.379.647	16/B
1.379.648	16/B
1.379.649	16/B
1.379.650	6
1.379.668	19/A
1.379.669	19/A
1.379.674	8
1.379.680	56
1.379.681	56
1.379.682	56
1.379.683	56
1.379.684	56
1.379.686	13/A
1.379.687	13/A
1.379.701	21/B
1.379.702	21/B
1.379.704	21/B

Part number	Page number
1.379.706	14/A
1.379.707	49
1.379.708	16/A, 17/A
1.379.709	48
1.379.710	48
1.379.733	54
1.379.736	54
1.379.373	54
1.379.738	54
1.379.747	54
1.379.748	16/A
1.379.749	16/A
1.379.751	16/A
1.379.755	56
1.379.756	56
1.379.757	56
1.379.759	56
1.379.760	56
1.379.761	56
1.379.762	56
1.379.763	56
1.379.776	18/A, 24/A,24/A1,24/A2,24/A3, 24/A4,24/B
1.379.795	57
1.379.796	57
1.379.799	57
1.379.805	57
1.379.809	57
1.379.813	57
1.379.814	57
1.379.824	57
1.379.829	57
1.379.830	57
1.379.887	21/B
1.379.889	21/B
1.379.913	21/A,22/A,23/A
1.379.914	21/A, 22/A, 23/A, 33
1.379.924	14/B
1.379.932	1
1.379.933	1
1.379.955	7
1.379.956	7
1.379.957	7
1.379.958	7
1.379.963	19/A
1.379.973	47
1.379.974	47
2.401.765	40

Part number	Page number
2.403.473	4
2.405.227	4
213.607.0	28
234.364.0	51
237.816.0	55
25.541.14.50.00	6,7,43
25.553.20.10.07.	8,9,10
54000111532	55
54005007001	20
60042406090	42
610.097.1	60
616.068.0	8,9,10
63001203000	61
63001803000	61
63002003009	13/A
63003026500	5/A,48
63003030010	5/A,48
63003503500	5/A,13/A,48
63007151500	5/A,48
665.840.0	8
668.800.0	28
668.818.0	28
67210000011	21/A,22/A,23/A
973.749.0	64
676.304	8,10
683.721.1	28
683.722.1	28
683.725.0	28
71385003	37
70006001062	7
70006011860	12,47
70100003201	48
70110000001	21/A,21/B,23/A
70100003501	5/A,48
70100004001	12,47
70100004701	8,9,10
70100006201	5/A,13/A,48
70100007201	5/A,13/A,48
70100008001	5/A,13/A,48
70100008501	5/A,48
70110000001	21/A,21/B
70200001201	42
70200002501	5/A,13/A,48
70200003001	5/A,13/A,48
70200003201	8,9,10
70200003501	5/A,8,9,10,48
70200004001	9,10
70200004501	8,9,10

Part number	Page number
70200004561	29/A,29B
70200005001	13/A
70200005501	9,10
70706000026	44,54
70708000066	6,21/A,21/B,22/A,23/A,33, 34,35,54
70710000066	2, 2/A,7,11/A,18/A,21/A, 23/A, 42,44,49,54
70712000066	23/A,34,65
70712012563	11/A
70716000066	35,39
70808000026	29/A,29/B,58/A,58/B,59, 60, 61,63
71404000060	42
71406000060	42,44, 61
71408000060	21/A,23/A, 55, 60
71410000060	11/A,18/A,44,49
71412000060	6,7,18/A,23/A,25,34,54,65
71416000060	65
71424000060	52
71625035100	7
71625035010	5/A,48
71625035020	5/A,48
71625035050	5/A,7,48
71630042010	5/A
71630042020	5/A
71630042050	5/A,7
71632045100	7,8,9,10
71635045010	5/A,48
71635045020	5/A,48
71635045050	5/A,48
71637047100	8,9,10,15/A
71645055010	5/A,48
71645055020	5/A,48
71645055050	5/A,48
71650062010	3
71650062020	3
71650062050	3
71610513001	3
71610513002	3
71610513005	3
71619026020	5/A,48
71619026050	5/A,48
71619026120	5/A,48
71625035010	5/A
71625035020	5/A
71625035050	5/A
71625035200	48
71630042010	5/A.48

Part number index - 2017

Part number	Page number
71630042020	5/A,48
71630042050	5/A,7,48
71630042100	7
71635045010	5/A,48
71635045020	5/A,48
71635045050	5/A,48
71645055010	5/A
71645055020	5/A
71645055050	5/A
71663080010	13/A
71663080020	13/A
71663080050	13/A
71701000060	15/A
71808000060	2/A,11/A,13/A,24/A,24/A1, 24/A2,24/A3,24/A4,49,55
71810000060	3,5/A,11/A,18/A,23/A,34, 48,49
71812000060	3
72208000060	21/A,21/B,22/A,23/A, 29/A,29/B,33,34
72210000060	2,2/A,14,14/B,15/A
72216000060	65
72402001660	21/B
72402502560	23/A,34
72404002860	18/A,54
73002001601	42
73005000801	49
73005001601	49
73005003601	18/A
73005000801	11/A
73006005501	47
73006006001	7
73006007001	12
73008003601	18/A
73008004006	7
73008006001	7
73010005501	47
73010006001	7
73010007001	12
73100105501	47
73100106501	12
73108004001	5/A,43/A
73100104501	43/A
73505000066	58/A
73506000066	42,54, 61
73508000066	2,2/A,6,7,9,10,16/A,16/B, 17/A,20,21/A,21/B,22/A, 23/A,25,29/A,29/B,33,34, 42,54,55,60,63
73510000066	2,2/A,23/A,34,44

Part number	Page number
73512000066	6,7,25,35
73516000066	65
73524000066	41,52
73612000066	28
74901000066	2/A,43/A
74901200066	25
74901400066	11/A,49
74904000066	42
74905000066	24/A
74906000066	21/A, 23/A,24/A1,24/A2, 24/A3,24/A4, 29/A,29/B, 42,54, 58/A,58/B,59,60,63
74908000066	16/A, 16/B, 17/A, 21/A, 21/B,22/A,23/A, 24/A, 26, 42,54,57
74910000066	18/A, 57
74912000066	5/A,18/A,20,48
74914000066	18/A
74916000066	41,52,55
74924000066	52
76308002066	6,7,20,21/A,22/A,23/A
76308002566	23/A,33,34
76310003066	43/A
76310003566	11/A,49
77208004560	21/A,21/B,22/A,23/A
78208002063	6,7,21/A,21/B,22/A,23/A, 25,33,34
78208002563	*55*
79101601560	5/A,48
79200800160	3
79202001560	3
79308004066	21/A,21/B,23/A,33,34
79308005066	21/A,23/A
79308005566	21/A,21/B,23/A,33,34
79308009063	21/A, 21/A, 23/A, 33, 34
79308010063	22/A
79312008566	25
79312015066	6,7,25
79312016066	25
79316155066	13/A
79404001666	20,42
79405001660	58/A
79405003566	24/A
79406001066	2, 2/A
79406002066	42
79406003066	21/A, 23/A
79406004066	24/A1,24/A2,24/A3,24/A4
79406004566	24/A
79406005066	24/A,24/A1,24/A2,24/A3, 24/A4

Part number	Page number
79406005566	42
79408001666	2,2/A,11/A,21/A,22/A,23/A , 42,54
79408001866	11/A,49
79408002066	2,2/A,6,7,16/A,16/B,17/A, 18/A, 20, 21/A, 22/A,23/A, 24/A, 33,34,43/A,45,49,54, 55, 57
79408002566	2,2/A, 16/A,16/B,17/A,20, 21/B, 26,29/A,29/B, 33,34, 35, 58/A,63
79408003063	23/A,34
79408003066	21/A,21/B,22/A,23/A,33,34 57, 61
79408003566	16/A,16/B,17/A,21/A,23/A, 42,58/B,59, 60
79408004066	18/A,21/B,23/A,33,34,56
79408004566	21/A,23/A,33,34
79408005066	42,55
79408006066	22/A,23/A,33,34
79408006566	21/A, 22/A, 23/A
79408007066	21/B
79408008066	21/A
79410001666	18/A
79410002066	7,8,9,10,11/A,16/A,16/B, 17/A, 18/A,44,49
79410002566	7,11/A.20,21/A,21/B,22/A, 23/A,25/B,33,34,49,57
79410003063	11/A,49
79410003066	2,2/A,7,8,9,10,11/A,15/A, 25, 49
79410003566	2/A
79410004566	42,49
79410005566	18/A,54
79410007066	18/A
79412002066	2, 2/A
79412003066	2, 2/A
79412003566	11/A,25,35,49,55,65
79412004566	7,11/A
79412005566	18/A
79412009066	6,7
79412012066	6,7
79412125256	47
79414004566	2, 2/A
79416003066	65
79416003566	6,7,25
809.124.0	44
80108001266	14,14/B,15/A
80206004066	29/A,29/B,58/A,58/B,59, 60,63
80208001666	24/A,24/A1,24/A2,24/A3,
	24/A4
80208002066	58/A
80208002566	2/A, 55
80208003566	13/A
80210003063	11/A,23/A,34,49
80210003563	5/A,11/A,18/A,48,49
80210004063	5/A,48
80210004066	14,14/B,15/A
80212035063	3
80212006566	5/A,48
80214004566	11/A, 49
80214006566	11/A, 49
80308002062	11/A,49
80310003063	3
80400602063	13/A
80408001266	21/A,23/A
80400802063	21/B,22/A
80400802563	5/A,48
80400803563	9,10
80400804063	9,10
80401002563	7,12,44
80401003063	5/A,12,48
80401004063	8,9,10
80404001266	42
80405001603	42
80406003066	44
80408001666	44
80408002063	13/A,33,34
80410003566	44
80414005063	4
81106001663	54
81108001663	42, 21/A
81108002563	22/A
81110001668	8,10
81112003563	21/A,21/B,22/A,23/A,33,34
81303501366	42
84208073600	9,10
84210084000	8,9,10
84501000032	14/A, 14/B, 15/A
84503400010	15/A
84530000000	11/A,49
84553333520	11/A,49
85609000000	13/A
85801001000	5/A,48
85803200700	48
85803500700	13/A
85803800700	3
85804000700	12

Part number index - 2017

Part number	Page number
85804006208	5/A,48
85804055007	5/A,48
85804506208	5/A,48
85804508501	5/A,48
84504572081	13/A
85609000000	13/A
85805008008	5/A.48
85805007208	13/A
85805080100	3
85805508500	3
85807201000	48
86700000800	40
86700001100	8,9,10
86801100000	8,9,10
87000003556	8, 9, 10
87000004049	40, 41, 52
87001420710	5/A
87001620910	5/A
87000131262	3
87000004049	52
87000320314	47
87000330314	44
87000420314	12,47
87000421010	5/A,48
87000620114	42
87000620611	5/A13/A,,48
87000621010	3,5/A,48
87001420710	5/A,48
87001601010	5/A,48
87001620414	8,9,10
87001620614	5/A,48
87001620710	13/A
870016620810	13/A
87001620910	5/A,48
87006191014	13/A
87010621114	3
87010620214	13/A
87010630510	5/A,48
87013021001	3
87030620514	55
87030620914	8,9,10
87100004500	50
87300008516 – PF85	8,9,10
905.875.0K	28
91601111000	42
91623938661	20
91623938761	2,2/A,6, 7,11/A,16/A,16/B, 17/A, 18/A,20,21/A,21/B, 22/A, 23/A,25,29/A,29/B,

Part number	Page number
	33, 34, 42,43/A, 45,49,54, 55, 58/A, 58/B, 59,60, 61, 63
91623938861	2,2/A,7,8,9,10,11/A,16/A, 16/B,17/A,18/A,21/A,21/B, 22/A,23/A,25,25/B,33,34, 44,49
91623938961	2,2/A,6,7,8,9,10,11/A, 21/A,21/B,22/A,23/A,25,33 ,34, 35,47,49,65
91623939061	2, 2/A
91623939161	6,7,11/A,25
91668372320	56
96700000002	21/A
96700000112	8,9,10
96701320540	8,9,10
96702361800	21/A, 23/A, 24/A
96702375920	7,11/A,20,42,49
96702378160	24/A1,24/A2,24/A3,24/A4
96703800001	24/A,24/A1,24/A2,24/A3, 24/A4
96714446000	57
96716002720	22/A
96716250085	42
96720070601	21/A,23/A,33,34
96789617873	58/A
96792685501	54
96799585520	42
96799674430	42
967PSF30526	21/A,21/B,22/A,23/A,33, 34, 64
967PV615000	20
97308040102	56
97327001370	42
97515182510	42
97909349340	7
975PV615000	20
985AZ102725	20
993.454.0	21/A,23/A,33,34
994.610.0	28
ALUBIA 00 EP	11/A,49
Loctite 243	11/A,13/A,49
Loctite 5910	11/A,13/A,49
Loctite 603	13/A

Part number index - 2017

Part number	Page number	Part number	Page number