MacDon

# Model 960 Double Delivery and Triple Delivery HARVEST HEADERS

# OPERATOR'S MANUAL

**MacDon Industries Ltd.**
680 Moray Street
Winnipeg, Manitoba R3J 3S3
(204) 885-5590, Fax 832-7749

**MacDon, Inc.**
9700 N.W. Conant Avenue
Kansas City, Missouri 64153-1832
(816) 891-7313, Fax 891-7323

# INTRODUCTION

Your new Harvest Header is designed to serve a dual function in your grain and specialty crop harvesting operation:

1. Teamed with your self propelled windrower power unit, the header will cut and lay crop into uniform fluffy windrows. Windrowing allows starting the harvest earlier, protects the crop from wind damage, and gives you more flexibility in scheduling combine time. (Both the "Double Delivery" and "Triple Delivery" models of the Harvest Header can deliver crop to the end of the header, which allows using your combine as the power unit when windrowing.)

2. When conditions are right for straight-cutting, the header can quickly be adapted to attach directly to your combine. When weather is not a critical factor, straight-cutting eliminates the windrowing operation.

**NOTE:** This manual contains information on the Harvest Header. It must be used in conjunction with your Windrower, Tractor and/or Combine Operator's Manual. As well, a separate manual is provided for the adapter which is required to allow attachment of the header to the various makes and models of combines and tractors.

CAREFULLY READ ALL MANUALS TO BECOME FAMILIAR WITH RECOMMENDED PROCEDURES BEFORE ATTEMPTING TO UNLOAD, ASSEMBLE OR USE THE MACHINE.

Use this manual as your first source of information about the header. If you follow the instructions given in this manual your Harvest Header will work well for many years.

This manual contains information on "Safety", "Operation" and "Maintenance/Service". In addition, "Unloading and Assembly" instruction is given towards the back of this book.

Use the Table of Contents and the Index to guide you to specific areas. Study the Table of Contents to familiarize yourself with how the material is organized.

Keep this manual handy for frequent reference and to pass on to new operators or owners. Call your dealer if you need assistance, information or additional copies of the manual.

**NOTE:** Right hand (R/H), and Left hand (L/H) designations are determined from the operators position, facing forward.

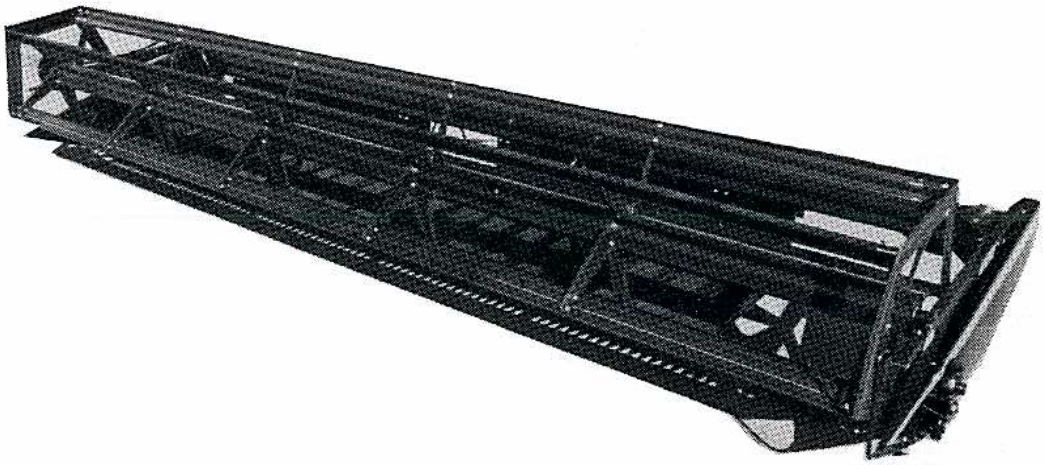

# TABLE OF CONTENTS

# TABLE OF CONTENTS

# SERIAL NUMBER LOCATION

Record the serial number in the space provided.

Harvest Header:_____

Plate is located on right hand end sheet, near main tube.

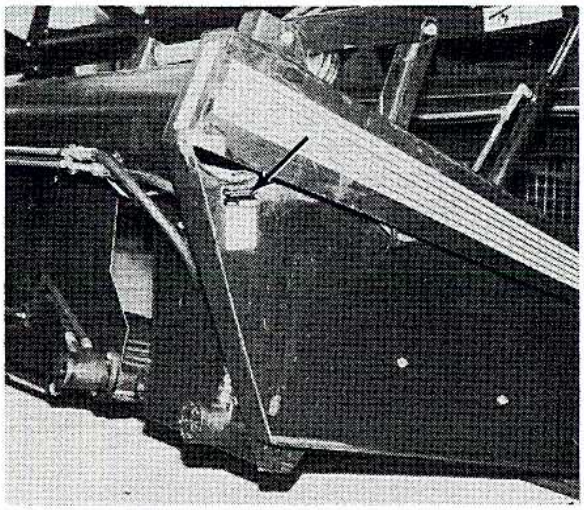

HEADER SERIAL PLATE

**NOTE:** When ordering parts and service, be sure to give your dealer the complete and proper serial number.

---

# SAFETY

**SAFETY ALERT SYMBOL**

This safety alert symbol indicates important safety messages in this manual and on safety signs on the header.

This symbol means: ATTENTION!
BECOME ALERT!
YOUR SAFETY IS INVOLVED!

Carefully read and follow the safety message accompanying this symbol.

Why is SAFETY important to you?

3 BIG REASONS

- ACCIDENTS DISABLE AND KILL
- ACCIDENTS COST
- ACCIDENTS CAN BE AVOIDED

# SAFETY

## SIGNAL WORDS

Note the use of the signal words DANGER, WARNING and CAUTION with safety messages. The appropriate signal word for each message has been selected using the following guidelines:

**DANGER** – an immediate and specific hazard or forbidden practice which WILL result in severe personal injury or death if the message is not followed.

**WARNING** – a specific hazard or unsafe practice which COULD result in severe personal injury or death if the message is not followed.

**CAUTION** – unsafe practice which COULD result in personal injury if the message is not followed, or a reminder of good safety practices.

---

## SAFETY SIGNS

- The safety signs reproduced on the next page appear on the header at the locations listed.
- Keep safety signs clear and legible at all times.
- Replace safety signs that are missing or become illegible.
- If original parts on which a safety sign was installed are replaced, be sure the repair part also bears the current safety sign.
- Safety signs are available from your Dealer Parts Department.

To install safety signs:

1. Be sure the installation area is clean and dry.
2. Decide on the exact position before you remove the backing paper.
3. Remove the smaller portion of the split backing paper.
4. Place the sign in position and slowly peel back the remaining paper, smoothing the sign as it is applied.
5. Small air pockets can be smoothed out or pricked with a pin.

## SAFETY SIGNS


DRIVELINES


LEFT & RIGHT REEL SUPPORT ARMS


DRIVE SHIELDS


LEFT & RIGHT REEL SUPPORT ARMS


LEFT HAND SHIELD

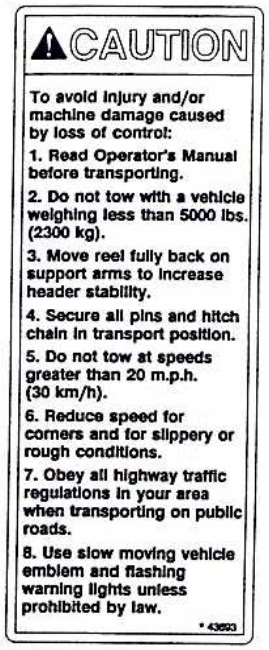


HITCH
(TRANSPORT OPTION)

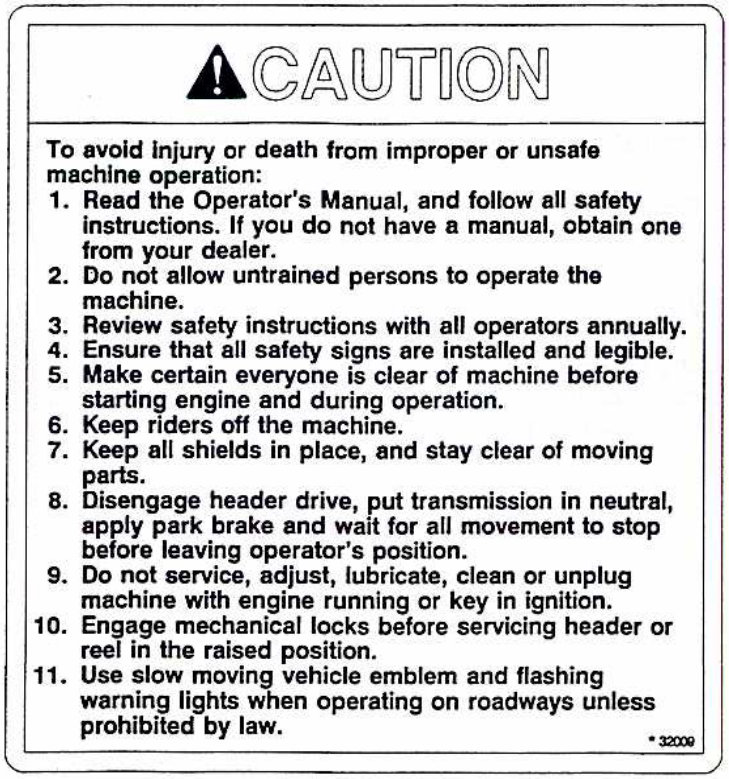


HEADER BACK TUBE


R/H WHEEL BEAM
(TRANSPORT OPTION)

## GENERAL SAFETY

**The following are general farm safety precautions that should be part of your operating procedure for all types of machinery.**

1. **Protect yourself.**

   **When assembling, operating and servicing machinery, wear all the protective clothing and personal safety devices that COULD be necessary for the job at hand. Don't take chances.**

   **You may need:**
   - **a hard hat.**
   - **protective shoes with slip resistant soles.**
   - **protective glasses or goggles.**
   - **heavy gloves.**
   - **wet weather gear.**
   - **respirator or filter mask.**
   - **hearing protection. Be aware that prolonged exposure to loud noise can cause impairment or loss of hearing. Wearing a suitable hearing protective device such as ear muffs (A) or ear plugs (B) protects against objectionable or loud noises.**

PROTECT YOURSELF

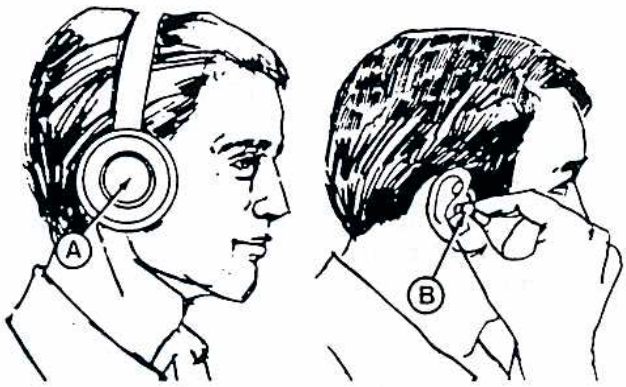


PROTECT AGAINST NOISE

2. **Provide a first-aid kit for use in case of emergencies.**

3. **Keep a fire extinguisher on the machine. Be sure the extinguisher is properly maintained and be familiar with its proper use.**

4. **Keep young children away from machinery at all times.**

5. **Be aware that accidents often happen when the operator is tired or in a hurry to get finished. Take the time to consider the safest way. Never ignore warning signs of fatigue.**


BE PREPARED FOR EMERGENCIES

## GENERAL SAFETY (continued)

6. Wear close-fitting clothing and cover long hair. Never wear dangling items such as scarves or bracelets.

7. Keep hands, feet, clothing and hair away from moving parts. Never attempt to clear obstructions or objects from a machine while the engine is running.

8. Keep all shields in place. Never alter or remove safety equipment. Make sure driveline guards can rotate independent of the shaft and can telescope freely.

9. Use only service and repair parts made or approved by the equipment manufacturer. Substituted parts may not meet strength, design, or safety requirements.

10. Do not modify the machine. Unauthorized modifications may impair the function and/or safety and affect machine life.

11. Stop engine and remove key from ignition before leaving operator's seat for any reason. A child or even a pet could engage an idling machine.

12. Keep the area used for servicing machinery clean and dry. Wet or oily floors are slippery. Wet spots can be dangerous when working with electrical equipment. Be sure all electrical outlets and tools are properly grounded.

13. Use adequate light for the job at hand.

14. Keep machinery clean. Straw and chaff on a hot engine are a fire hazard. Do not allow oil or grease to accumulate on service platforms, ladders or controls. Clean machines before storage.

15. Never use gasoline, naphtha or any volatile material for cleaning purposes. These materials may be toxic and/or flammable.

16. When storing machinery, cover sharp or extending components to prevent injury from accidental contact.

NEVER WEAR LOOSE
OR DANGLING CLOTHES

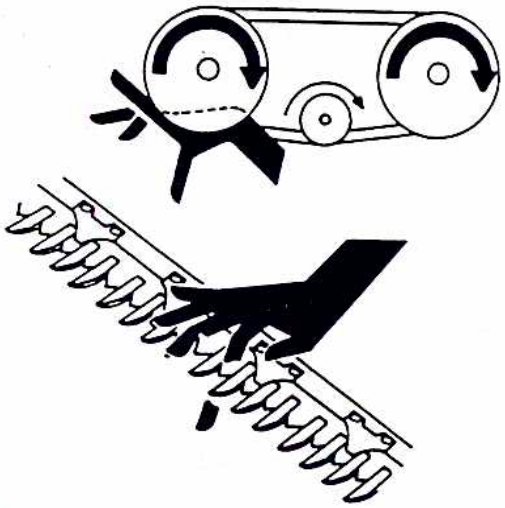

KEEP AWAY FROM MOVING PARTS

KEEP SERVICE AREA CLEAN AND DRY

# SPECIFICATIONS

| HARVEST HEADER | WINDROWER | COMBINE |
|---|---|---|
| | | (Specs listed may vary depending on combine) |
| SICKLE DRIVE | Wobble box (enclosed oil bath) | |
| SICKLE SPEED | 1300 strokes/minute | 1100 strokes/minute |
| SICKLE TYPE | Over-serrated | |
| DELIVERY OPENING WIDTH (between rollers) | 35" (890 mm) to 66" (1676 mm) | |
| DELIVERY OPENING HEIGHT at 8" (200 mm) cutting height | 34" to 37" (880 to 950 mm) | |
| CUTTERBAR RANGE ground to guard tip, (varies with guard angle and options) | 2.5" (65 mm) below ground to 42" (1080 mm) above | determined by combine |
| GUARD & DRAPER ANGLE: | | |
| - at 8" (200 mm) cutting height | 9° to 13° | 13° to 16° |
| - with cutterbar on gorund | 13° to 21° | |
| DRAPER TYPE | Self-tracking rubber coated polyester with rubber slats | |
| DRAPER WIDTH | 41.5" (1055 mm) | |
| DRAPER DRIVE | Hydraulic | |
| DRAPER SPEED | 0 to 470 ft./minute (145 m/min) | |
| FEEDER DRAPER SPEED | | 560 ft./min (170 m/min) |
| CROSS AUGER SPEED (varies with draper speed) | | 0 to 400 RPM |
| REEL TYPE | 5 Bat metal, or Cam action pick-up reel | |
| REEL DRIVE | Hydraulic | |
| REEL SPEED | 20 to 60 RPM | determined by combine |
| HEADER FLOTATION | | 8" (200 mm) vertical / 5° lateral |
| GAUGE WHEELS (no transport package) | 6.70-15 I1 Rib Implement | |
| Recommended Pressure | 24 to 28 psi (165 to 195 kPa) | |
| TRANSPORT PACKAGE GAUGE WHEELS | 9.5L-14 8 ply I1 Rib Implement | |
| Recommended Pressure | 42 to 46 psi (290 to 315 kPa) | |
| HEADER WEIGHT (with bat reel, less adapters) | | |
| 21 ft. Triple Delivery | 2345 lbs. (1060 kg) | |
| 25 ft. Triple Delivery | 2625 lbs. (1190 kg) | |
| 30 ft. Triple Delivery | 3050 lbs. (1385 kg) | |
| 21 ft. Double Delivery | 2240 lbs. (1015 kg) | |
| 25 ft. Double Delivery | 2520 lbs. (1145 kg) | |
| 30 ft. Double Delivery | 2940 lbs. (1335 kg) | |
| 36 ft. Double Delivery | 3440 lbs. (1560 kg) | |
| COMBINE ADAPTER WEIGHT | approx. 1400 lbs. (635 kg) (varies with combine) | |
| 9000 WINDROWER ADAPTER WEIGHT | 42 lbs. (20 kg) | |

(SPECIFICATIONS AND DESIGN ARE SUBJECT TO CHANGE WITHOUT NOTICE OR OBLIGATION TO REVISE PREVIOUS UNITS.)

# TORQUE SPECIFICATIONS

## CHECKING BOLT TORQUE

The tables shown below give correct torque values for various bolts and capscrews. Tighten all bolts to the torques specified in chart unless otherwise noted. Check tightness of bolts periodically, using bolt torque chart as a guide. Replace hardware with the same strength bolt.

## ENGLISH TORQUE SPECIFICATIONS

| Bolt Diameter "A" | Bolt Torque * SAE 2 N.m | (lb-ft) | SAE 5 N.m | (lb-ft) | SAE 8 N.m | (lb-ft) |
|---|---|---|---|---|---|---|
| 1/4" | 8 | (6) | 12 | (9) | 17 | (12) |
| 5/16" | 13 | (10) | 25 | (19) | 36 | (27) |
| 3/8" | 27 | (20) | 45 | (33) | 63 | (45) |
| 7/16" | 41 | (30) | 72 | (53) | 100 | (75) |
| 1/2" | 61 | (45) | 110 | (80) | 155 | (115) |
| 9/16" | 95 | (70) | 155 | (115) | 220 | (165) |
| 5/8" | 128 | (95) | 215 | (160) | 305 | (220) |
| 3/4" | 225 | (165) | 390 | (290) | 540 | (400) |
| 7/8" | 230 | (170) | 570 | (420) | 880 | (650) |
| 1" | 345 | (225) | 850 | (630) | 1320 | (970) |

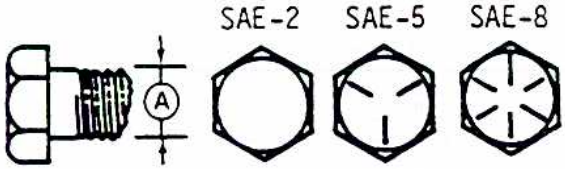


## METRIC TORQUE SPECIFICATIONS

| Bolt Diameter "A" | Bolt Torque 8.8 N.m | (lb-ft) | 10.9 N.m | (lb-ft) |
|---|---|---|---|---|
| M3 | .5 | (.4) | 1.8 | (1.3) |
| M4 | 3 | (2.2) | 4.5 | (3.3) |
| M5 | 6 | (4) | 9 | (7) |
| M6 | 10 | (7) | 15 | (11) |
| M8 | 25 | (18) | 35 | (26) |
| M10 | 50 | (37) | 70 | (52) |
| M12 | 90 | (66) | 125 | (92) |
| M14 | 140 | (103) | 200 | (148) |
| M16 | 225 | (166) | 310 | (229) |
| M20 | 435 | (321) | 610 | (450) |
| M24 | 750 | (553) | 1050 | (774) |
| M30 | 1495 | (1103) | 2100 | (1550) |
| M36 | 2600 | (1917) | 3675 | (2710) |

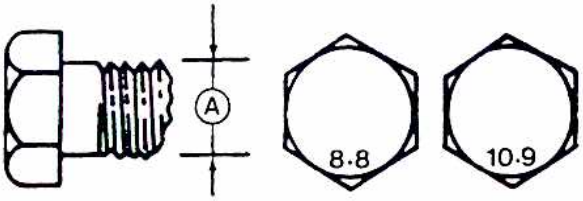


Torque figures indicated above are valid for non-greased or non-oiled threads and heads unless otherwise specified. Therefore, do not grease or oil bolts or capscrews unless otherwise specified in this manual. When using locking elements, increase torque values by 5%.

* Torque value for bolts and capscrews are identified by their head markings.

# TORQUE SPECIFICATIONS

## TIGHTENING O-RING FITTINGS *

1. Inspect O-ring and seat for dirt or obvious defects.
2. On angle fittings, back the lock nut off until washer bottoms out at top of groove.
3. Hand tighten fitting until back-up washer or washer face (if straight fitting) bottoms on face and O-ring is seated.
4. Position angle fittings by unscrewing no more than one turn.
5. Tighten straight fittings to torque shown.
6. Tighten angle fittings to torque shown while holding body of fitting with a wrench.

* The torque values shown are based on lubricated connections as in reassembly.

| Thread Size (in.) | Nut Size Across Flats (in.) | Torque Value* (N.m) | Torque Value* (lb-ft) | Recommended Turn to Tighten (After Finger Tightening) (Flats) | Recommended Turn to Tighten (After Finger Tightening) (Turns) |
|---|---|---|---|---|---|
| 3/8 | 1/2 | 8 | 6 | 2 | 1/3 |
| 7/16 | 9/16 | 12 | 9 | 2 | 1/3 |
| 1/2 | 5/8 | 16 | 12 | 2 | 1/3 |
| 9/16 | 11/16 | 24 | 18 | 2 | 1/3 |
| 3/4 | 7/8 | 46 | 34 | 2 | 1/3 |
| 7/8 | 1 | 62 | 46 | 1-1/2 | 1/4 |
| 1-1/6 | 1-1/4 | 102 | 75 | 1 | 1/6 |
| 1-3/16 | 1-3/8 | 122 | 90 | 1 | 1/6 |
| 1-5/16 | 1-1/2 | 142 | 105 | 3/4 | 1/8 |
| 1-5/8 | 1-7/8 | 190 | 140 | 3/4 | 1/8 |
| 1-7/8 | 2-1/8 | 217 | 160 | 1/2 | 1/12 |

## TIGHTENING FLARE TYPE TUBE FITTINGS *

1. Check flare and flare seat for defects that might cause leakage.
2. Align tube with fitting before tightening.
3. Lubricate connection and hand tighten swivel nut until snug.
4. To prevent twisting the tube(s), use two wrenches. Place one wrench on the connector body and with the second tighten the swivel nut to the torque shown.

* The torque values shown are based on lubricated connections as in reassembly.

| Tube Size OD (in.) | Nut Size Across Flats (in.) | Torque Value* (N.m) | Torque Value* (lb-ft) | Recommended Turns to Tighten (After Finger Tightening) (Flats) | Recommended Turns to Tighten (After Finger Tightening) (Turns) |
|---|---|---|---|---|---|
| 3/16 | 7/16 | 8 | 6 | 1 | 1/6 |
| 1/4 | 9/16 | 12 | 9 | 1 | 1/6 |
| 5/16 | 5/8 | 16 | 12 | 1 | 1/6 |
| 3/8 | 11/16 | 24 | 18 | 1 | 1/6 |
| 1/2 | 7/8 | 46 | 34 | 1 | 1/6 |
| 5/8 | 1 | 62 | 46 | 1 | 1/6 |
| 3/4 | 1-1/4 | 102 | 75 | 3/4 | 1/8 |
| 7/8 | 1-3/8 | 122 | 90 | 3/4 | 1/8 |

# OPERATION

## YOUR RESPONSIBILITIES AS AN OWNER/OPERATOR

**CAUTION:**

1. It is your responsibility to read and understand this manual and the Windrower or Combine Operator's Manual completely before operating the header. Contact your dealer if an instruction is not clear to you.

2. Follow all safety messages in the manuals and on safety signs on the header and windrower or combine.

3. Remember that **YOU** are the key to safety. Good safety practices protect you and the people around you.

4. Before allowing anyone to operate the machine, for however short a time or distance, make sure they have been instructed in its safe and proper use.

5. Review the manual and all safety related items with all operators annually.

6. Be alert for other operators not using recommended procedures or not following safety precautions. Correct these mistakes immediately, before an accident occurs.

7. Do not modify the machine. Unauthorized modifications may impair the function and/or safety and affect machine life.

8. The safety information given in this manual does not replace safety codes, insurance needs, or laws governing your area. Be sure your machine meets the standards set by these regulations.


READ THE OPERATOR'S MANUAL


FOLLOW SAFETY RULES

## TO THE NEW OPERATOR

It's natural for an operator to be anxious to get started with a new machine. Please take the time to familiarize yourself with the header by reading the Operator's Manuals and safety signs before attempting operation.

# HEADER OPERATION

## BREAK-IN PERIOD

1. After attaching header to combine or windrower tractor for the first time, set reel speed to maximum and operate the machine slowly for 5 minutes, watching and listening FROM THE OPERATOR'S SEAT for binding or interfering parts.

**CAUTION: Before investigating an unusual sound or attempting to correct a problem, shut off engine, engage parking brake and remove key.**

**NOTE:** Reel and side drapers will not operate until oil flow fills the lines.

2. Change hydraulic oil filter(s) as recommended in combine or windrower tractor Operator's Manual.

3. Adjust the tension of sickle drive belt (A) after a 5 hour run-in period. (See Maintenance/ Service section.) Continue to check the belt tension periodically for the first 50 hours.

4. Tighten any loose hardware after the first 5 hours operation. See Specifications section for recommended torques.

5. For headers with gauge wheels, check gauge wheel bolt torque after the first 10 hours operation and periodically thereafter (at least every 100 hours). Torque:
   4 bolt hub - 50 to 60 ft.lbs. (70 to 80 N·m)
   6 bolt hub - 80 to 90 ft.lbs. (110 to 120 N·m)

6. Tighten the four wobble box mounting bolts (B) after the first 10 hours operation and every 100 hours thereafter. Torque to 200 ft.lbs. (270 N·m), starting with the side mounting bolts.

7. Change wobble box lubricant after the first 50 hours operation and every 1000 hours (or 3 years) thereafter. See Maintenance/Service section.

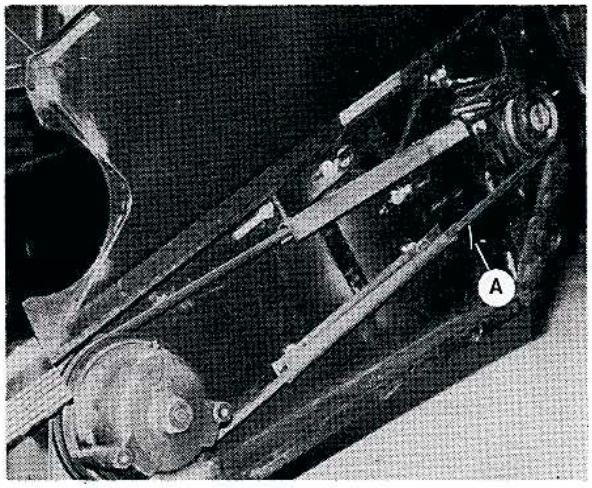


CHECK SICKLE DRIVE BELT TENSION

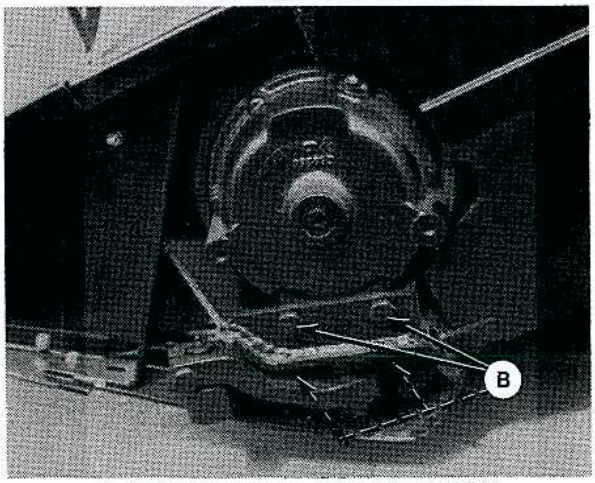


TIGHTEN FOUR WOBBLE BOX MOUNTING BOLTS

## PRE-STARTING CHECKS: ANNUAL

Do the following at the start of each operating season.

**CAUTION:**

1. **Review the Operator's Manuals to refresh your memory on safety and operating recommendations.**

2. **Review all safety signs and other decals on the machine and note hazard areas.**

3. **Be sure all shields and guards are properly installed and secured. Never alter or remove safety equipment.**

4. **Be sure you understand and have practiced safe use of all controls. Know the capacity and operating characteristics of the machine.**

5. **Check the first aid kit and fire extinguisher. Know where they are and how to use them.**

Also:

6. Install drapers. See "Drapers" in Maintenance /Service section.

7. Adjust belt, draper and chain tension. See Maintenance/Service section.

8. Perform all Annual Maintenance. See Maintenance/Service section.

## PRE-STARTING CHECKS: DAILY

Do the following each day before start-up:

**CAUTION:**

1. **Clear the area of other persons, pets etc. Keep children away from machinery. Walk around the header to be sure no one is under, on or close to it.**

2. **Remove foreign objects from the machine and surrounding area.**

3. **Wear close fitting clothing and protective shoes with slip resistant soles.**
   **As well, carry with you any protective clothing and personal safety devices that COULD be necessary through the day. Don't take chances.**

   **You may need:**
   **- hard hat**
   **- protective glasses**
   **- heavy gloves**
   **- respirator or filter mask**
   **- wet weather gear.**

4. **Protect against noise. Wear a suitable hearing protective device such as ear muffs or ear plugs to protect against objectionable or uncomfortably loud noises.**

5. **Check the machine for leaks or any parts that are missing, broken, or not working correctly.**

   **NOTE: Use proper procedure when searching for pressurized fluid leaks. See "Hydraulic System" in Maintenance/Service section.**

6. **Clean all lights and reflective surfaces on the machine.**

7. Perform all Daily maintenance. See Maintenance/Service section.

# HEADER OPERATION

## OPERATE CORRECTLY

**CAUTION:**

1. Follow all safety and operational instructions given in your Operator's Manuals. If you do not have a windrower tractor and/or combine manual, get one from your dealer and read it thoroughly.

2. Never attempt to start the engine or operate the machine except from the operator's seat.

3. Check the operation of all controls in a safe clear area before starting work.

4. Do not allow riders on windrower or combine.

5. Never start or move the machine until you are sure all bystanders have cleared the area.

6. Avoid travelling over loose fill, rocks, ditches or holes.

7. Drive slowly through gates and doorways.

8. When working on inclines, travel uphill or downhill when possible. Be sure to keep transmission in gear when travelling downhill.

9. Never attempt to get on or off a moving machine.

10. Do not leave the operator's station while the engine is running.

11. Stop engine and remove key before adjusting or removing plugged material from the machine. A child or even a pet could engage the drive.

12. Check for excessive vibration and unusual noises. If there is any indication of trouble, shut-down and inspect the machine. Follow proper shut-down procedure:
    - engage brake
    - disengage header drive
    - turn off engine and remove key
    - wait for all movement to stop
    - dismount and engage cylinder stops before inspecting raised machine.

13. Operate only in daylight or good artificial light.

DO NOT ALLOW RIDERS

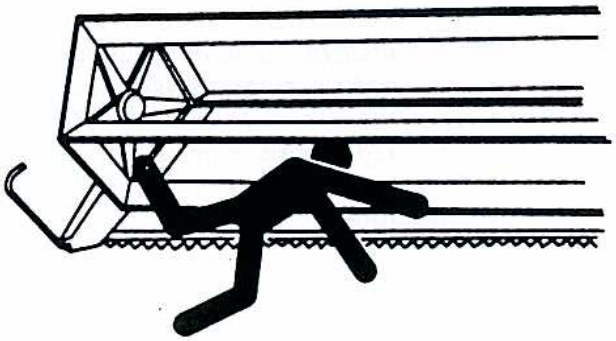

CLEAR THE AREA BEFORE OPERATING

# HEADER OPERATION

## HEADER CONTROLS

**CAUTION: Be sure all bystanders are clear of machine before starting engine or engaging any header drives.**

See your Windrower Tractor or Combine Operator's Manual for identification of in-cab controls for:

- Header Drive Clutch
- Header Height
- Ground Speed
- Reel Speed
- Reel Height

## HEADER LIFT CYLINDER STOPS

**DANGER: To avoid bodily injury or death from fall of raised header, always engage cylinder stops before going under header for any reason. See your Windrower Tractor or Combine Operator's Manual for instruction regarding the use and storage of header lift cylinder stops.**

## REEL PROPS

**WARNING: To avoid bodily injury from fall of raised reel, always engage reel props before going under raised reel for any reason.**

Reel props are located at each reel support arm.

To engage reel props:

1. Raise reel to maximum height.
2. Move props (B) to engaged position.
3. Lower reel until props contact end frames.

**NOTE:** Keep pivot bolt (C) properly tightened so prop remains in stored position when not in use, yet can be engaged with hand force.

For 36 foot header, be sure hose is positioned to pass through slot (D) in center arm prop.

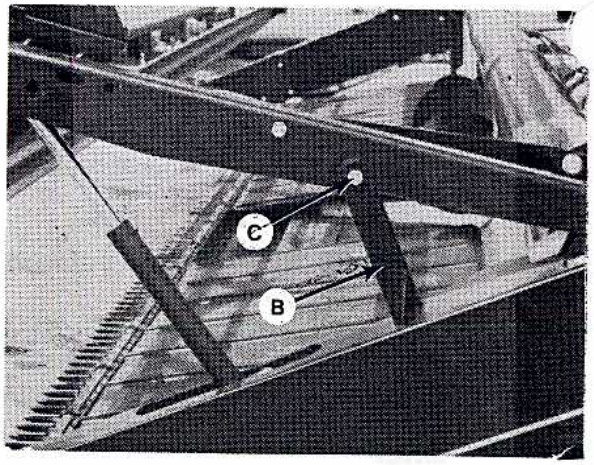


REEL PROP - ENGAGED

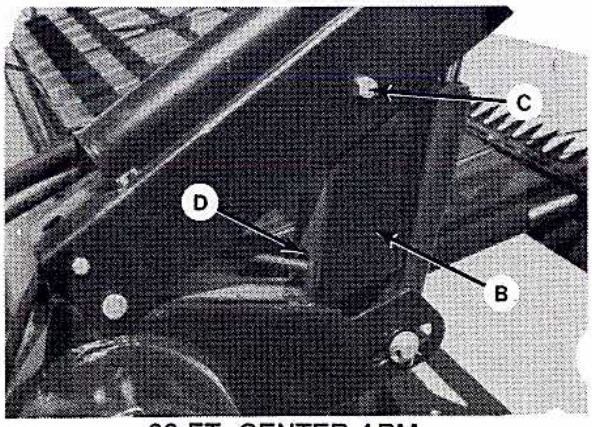


36 FT. CENTER ARM
REEL PROP - ENGAGED

## Operating Variables

Satisfactory function of the header requires making the proper adjustments to suit various crops and conditions.

Correct operation reduces crop loss and allows cutting of more acres. As well, proper adjustments and timely maintenance will increase the length of service you receive from the machine.

The variables listed at right will affect the performance of the header. You will quickly become adept at adjusting the machine to give you the desired results.

**OPERATING VARIABLES**

1. Ground Speed
2. Cutting Height
3. Header Flotation
4. Header Angle
5. Draper Speed
6. Delivery Opening Width
7. Reel Speed
8. Reel Height
9. Reel Fore-Aft Position
10. Divider Angle

---

### GROUND SPEED

- Ground speed should be such that the sickle can cut crop smoothly and cleanly, while giving the desired delivery of material to the opening. Excessive ground speed results in "ragged" cutting. See "Windrowing" for affects of ground speed on windrow formation.
- In tough-to-cut crops like flax, reduce ground speed to reduce loads on cutting components and drives.
- Higher ground speeds require heavier float settings to prevent excessive bouncing. This will result in increased cutting component damage.
- As ground speed is increased, draper and reel speed should be increased to handle the extra material.

The chart below indicates the relationship between ground speed and area cut for the four header sizes. Example shown: At a ground speed of 5 miles per hour (8 km/h) with a 36 ft. header, the area cut would be approximately 22 acres (9 hectares).

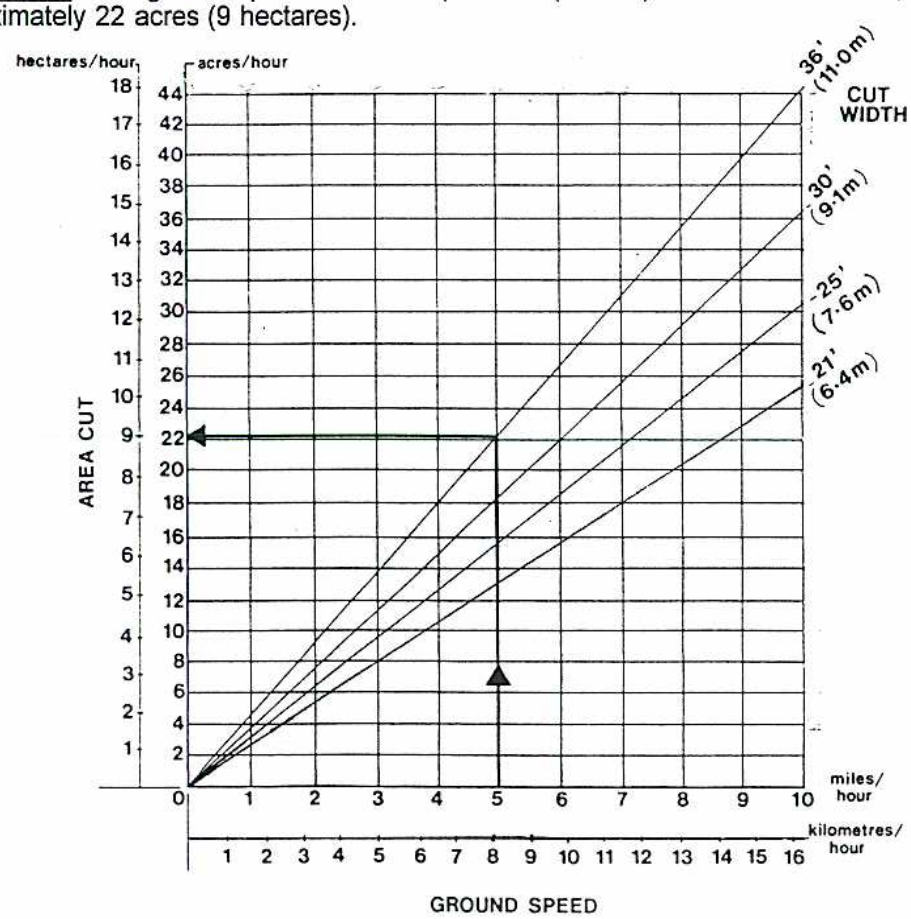

## Operating Variables (continued)

### CUTTING HEIGHT

Cutting height will vary, depending on whether windrowing or straight-cutting, type of crop, etc. See "Windrowing" for stubble height recommendations.

**Gauge Wheel Field Positions:**
**30 & 36 ft. only**

For headers equipped with gauge wheels or the gauge wheel/transport package, choose Field Position1 or 2 to maintain proper gauge wheel spring force at desired cutting height.

**Field Position 1** when cutterbar is on the ground (0 to 4 in. [100 mm] cutting height).

**Field Position 2** when cutterbar is above the ground (4 to 12 in. [100 to 300 mm] cutting height.

**NOTE:** When changing gauge wheel field position, readjust header flotation. See "Header Flotation" in Windrower Tractor or Combine Adapter Operator's Manual.

**NOTE:** Gauge wheel field position should also be related to Header Angle. Use Position 2 for flatter header angles and Position 1 for steeper header angles.

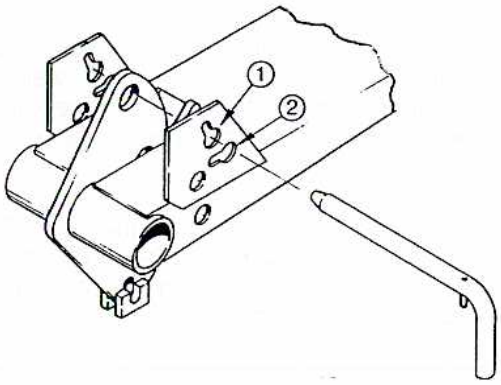


STANDARD GAUGE WHEEL SUPPORT

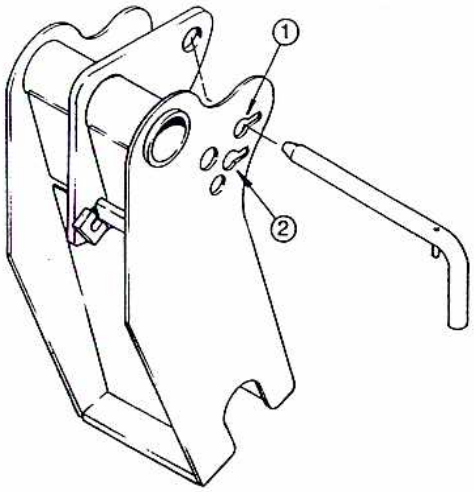


TRANSPORT PACKAGE -
LEFT WHEEL SUPPORT

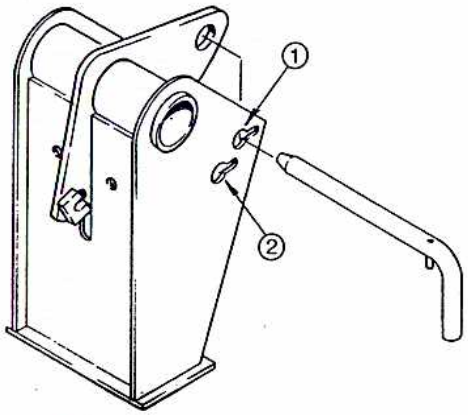


TRANSPORT PACKAGE -
RIGHT WHEEL BEAM SUPPORT

## Operating Variables

**CUTTING HEIGHT (continued)**

**Skid Shoes (Attachment)**

Skid shoes are available as an attachment. The primary benefits of skid shoes are:

1. Help prevent damage to cutting components.
2. Reduce scooping of dirt onto cutterbar.
3. Provide a method of setting a minimum cutting height.

To adjust skid shoes:

1. Remove one of the guard bolts securing support (S).
2. Remove rods from supports and position shoe at desired setting. Adjust both shoes to the same position to provide an even cutting height.
   **NOTE:** When using the "flattest" setting, (Position 1), ensure angle (A) is removed to prevent draper damage.
3. Replace rods in supports and replace guard bolt.

**NOTE:** The skid shoe kit includes two shoes. Additional skid shoes may be installed if required.

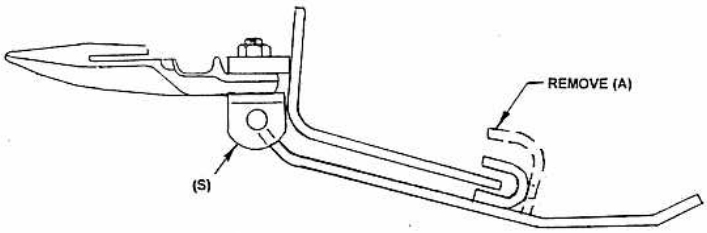


POSITION 1

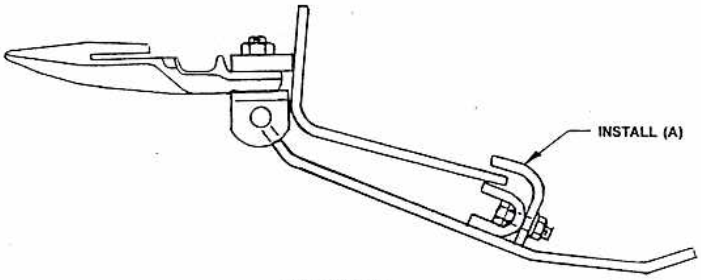


POSITION 2

SKID SHOE POSITIONS

## Operating Variables (continued)

### HEADER FLOTATION

**IMPORTANT:** To avoid frequent breakage of sickle components, scooping soil, or soil build-up at cutterbar in wet conditions, header float should be set as light as possible without causing excessive bouncing.

Under normal conditions, adjust float spring tension so 50 to 70 lbs. force (220 to 300 N) is required to lift cutterbar off ground at each end.

See "Header Flotation" in Windrower or Combine Adapter Operator's Manual for adjustment details.

---

### HEADER ANGLE

The header (or guard) angle can be set between 9° and 13° below horizontal on the windrower.

The header (or guard) angle can be set between 13° and 16° below horizontal on the combine. (Actual range may vary with combine set-up.)

**IMPORTANT:** The flattest header angles are recommended for normal conditions. A flatter header angle reduces sickle section breakage and reduces soil scooping or build-up at the cutterbar in wet conditions. Use a steeper angle to cut very close to the ground, or in down crop for better lifting action.

See "Windrowing" for the effects of header angle on windrow formation. See "Header Angle" in Windrower or Combine Adapter Operator's Manual for adjustment details.

For headers with gauge wheels, see "Gauge Wheel Field Positions" in this section for proper relationship between gauge wheel setting and header angle.

---

### DRAPER SPEED

Draper speed affects the orientation of stalks in the delivered crop. See "Windrowing" for the affect of draper speed on windrow formation. See Windrower or Combine Adapter Operator's Manual for adjustment details.

---

### DELIVERY OPENING WIDTH

For windrower, the width and position of the delivery opening affects the width and configuration of the windrow. See "Windrowing" for more information.

See Combine Adapter Operator's Manual for recommended overlap of side drapers over feeder draper.

The center delivery opening can be adjusted to any width between 35" (890 mm) and 66" (1676 mm) measured between the rollers.

**NOTE:** End delivery opening size is limited by windrower drive tires and/or deck contacting header frame. When shifting decks to end delivery, ensure center delivery opening size is:

- 21' Header - 42" (1067 mm) or narrower.
- 25' Header - 61" (1549 mm) or narrower.
- 30' Triple Delivery Header - 54.5" (1384 mm) or narrower.
- 30' Double Delivery Header - 61" (1549 mm) or narrower.
- 36' Header - 61" (1549 mm) or narrower.

## Operating Variables

**DELIVERY OPENING WIDTH (continued)**

**To adjust delivery opening width:**

1. Release draper tension as follows:
   - Loosen bolt (A).
   - Loosen nut (B).
   - Slide bracket (C) towards idler roller.
     **NOTE:** It may be necessary to tap bracket (C) with a hammer to start it moving.

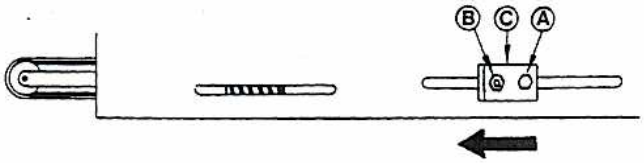


RELEASE DRAPER TENSION

2. Remove screws from draper connector slat.

3. Use this chart to position connector tubes at the appropriate rows of holes for desired opening size.
   **NOTE:** The second row of holes at each set is provided to allow minor adjustments.

| CONNECTION | CENTER DELIVERY OPENING WIDTH (between rollers) | DESIGNATED APPLICATION and COMMENTS |
|---|---|---|
| Row A to Row F (both drapers) | 32.5" (825 mm) | Opening for combine models: Case 2166, 1660,1460 New Holland TR97, TR87, TR96*, TR86* (* 1991 and after) |
| Row B to Row F (both drapers) | 34.5" (875 mm) | Opening for combine models: Case 2188,1680,1480; MF8570; NH TR96*, TR86* (*1990 and prior), all Gleaner, all White |
| Row B to Row E (L/H draper)<br>Row C to Row E (R/H draper) | 42" (1067 mm) | Maximum opening for shifting decks on 21' Header. |
| Row C to Row F (both drapers) | 52.5" (1335 mm) | Opening for combine models: all JD, all NH-TX, all Claas, MF 860, 8460, 8450 |
| Row C to Row E (both drapers) | 54.5" (1384 mm) | Maximum opening for shifting decks on 30' Triple Delivery Hdr. |
| Row C to Row E (L/H draper)<br>Row D to Row E (R/H draper) | 61" (1549 mm) | Maximum opening for shifting decks on 25' Double & Triple Delivery, 30' Double Delivery and 36' Headers. |
| Row D to Row F (both drapers) | 66" (676 mm) | Maximum opening on all header sizes for center delivery only. |

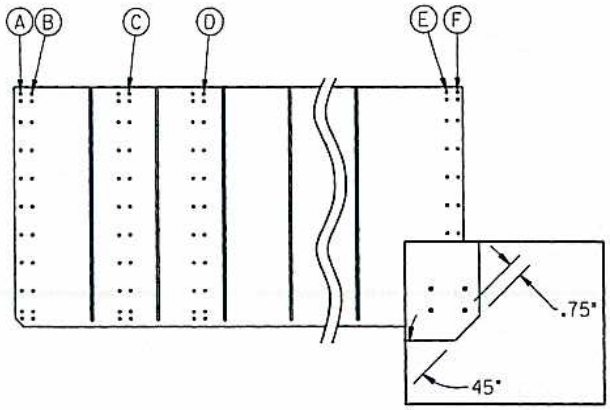


4. Cut excessive flap off of draper, leaving 3/4" (20 mm) extending above the connector. Trim the new ends at the front corners as shown. This allows draper to fit properly under front draper seal (D) to prevent tearing of front edge. Use the cut-offs as a guide for trimming.

5. Connect draper with screw heads facing center opening. If connector tube holes are closer to one end of tube than the other, place end with closer holes at the cutterbar.

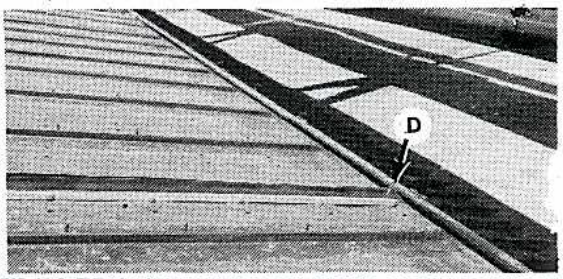


TRIM FRONT EDGE OF NEW CONNECTION

## Operating Variables

**DELIVERY OPENING WIDTH (continued)**

**NOTE:** To reduce the opening size after it has been enlarged, a short section of draper (available from your dealer) can be added to increase draper length.

6. Slide bracket (C) away from idler roller as far as hand force allows. Check that draper V-guide (E) is properly engaged in grooves at rear of both rollers.

7. Tighten nut (B) to secure the position of bracket (C).

8. Apply draper tension by turning bolt (A) clockwise until gap between idler spring coils is 1/16 inch (1.5 mm).
   **IMPORTANT:** Do not collapse spring. The spring maintains draper tension and prevents over-tension. If spring is collapsed, damage to draper and rollers may result from excessive draper tension.

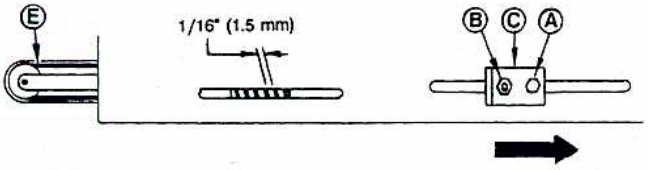


APPLY DRAPER TENSION

9. On Triple Delivery Headers with hydraulically shifted decks, the deck stops must be repositioned after an adjustment to delivery opening width, as follows:

- Start engine and engage header clutch. Move deck shift switch to the right to shift left deck towards right deck. Disengage header clutch when there is approximately 2 inches (50 mm) clearance between the rollers of the two decks.
  **IMPORTANT:** This clearance is required to prevent contact between draper connectors or slats as they pass between decks.
- Stop engine. Remove bolts (F) at left deck stop and move the stop against motor bracket (G). Replace bolts (F).
- Start engine and engage header clutch. Move deck shift switch to the left to move left deck back to left position and move right deck towards left deck, again disengaging clutch when clearance is about 2 inches (50 mm).
- Stop engine and position right deck stop as above.

**NOTE:** An alternate method of setting the deck stops is to shift decks to the center delivery position, then measure the distance the deck must travel to reach the 2 inch (50 mm) clearance position. Set the deck stop the same distance from the motor bracket.

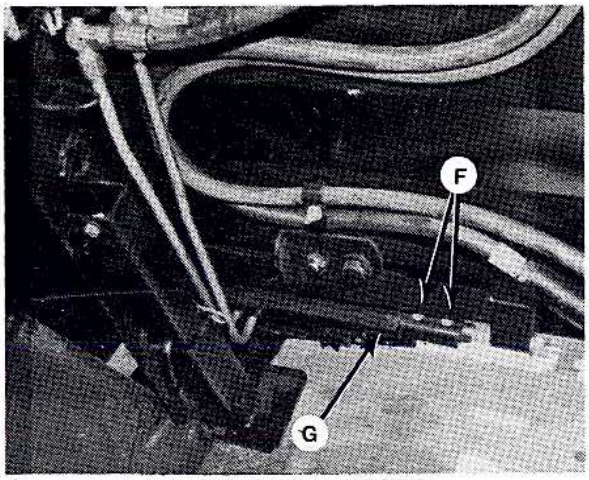


ADJUST DECK STOPS - TRIPLE DELIVERY HEADER

## Operating Variables

### DOUBLE DELIVERY HEADERS

The left deck of the double delivery header can be manually shifted to close off the center opening and deliver crop to the left end of the header. This provides the capability of windrowing with a combine or non-windrower tractor as the power unit.

**To shift left deck (Double Delivery Headers):**

1. Remove cross auger. Connect the header hose with orange coupler to red hydraulic coupler on combine adapter. (It will be necessary to remove orange coupler from mount on header.)

2. Reverse draper travel as follows:

   25 ft.: Disconnect hydraulic hoses at left draper motor (A) and install in opposite ports.

   30 & 36 ft.: Disconnect hydraulic hoses at (B) and connect to opposite lines.

3. Remove deck retainer clips at cutterbar. (If front edge draper seals are installed at cutterbar, remove these seals and clips as well.)

4. Loosen bolts (C) at both clamps on left deck. Lifting front of deck at cutterbar, manually slide deck to the right until there is approximately 2 inches (50 mm) clearance between the rollers of the two decks.
   **IMPORTANT:** This clearance is required to prevent contact between draper connectors or slats as they pass between decks.

5. Tighten bolts (C) at both clamps.

6. Reinstall deck retainer clips (and front edge draper seals, if required).

7. Adjust header flotation to compensate for the shift in weight. See "Header Flotation" in Windrower or Combine Adapter Operator's Manual.

8. For rotary combines with narrow feeder opening, increase delivery opening width to be suitable for windrowing. See "Delivery Opening Width", beginning on page 20.

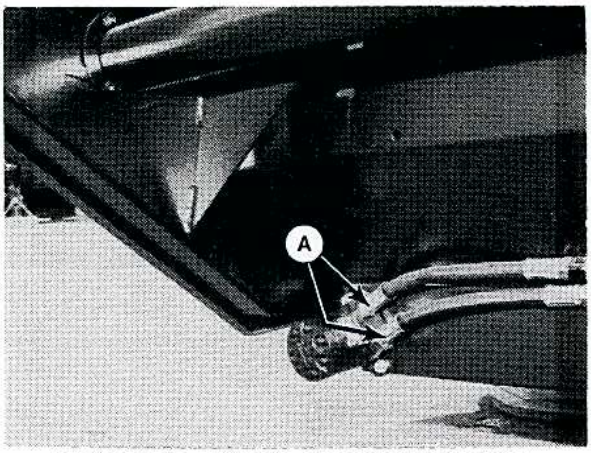


REVERSE HOSES AT LEFT MOTOR
25 FT. HEADER

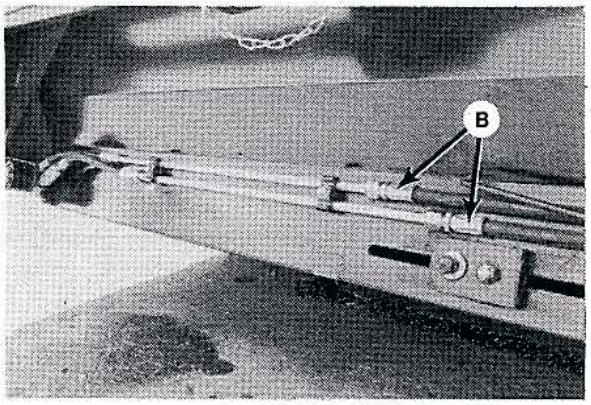


REVERSE HOSES AT HYDRAULIC LINES
30 & 36 FT. HEADERS

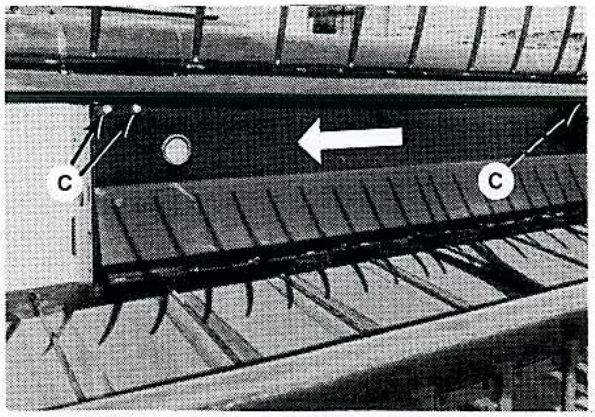


LOOSEN CLAMPS, LIFT FRONT OF DECK
AND SLIDE

## Operating Variables (continued)

### REEL SPEED

- Reel speed affects the smoothness and evenness of the delivered crop. Operating the reel too fast or too slow relative to ground speed will cause bunching.
- In standing crop, reel speed should be just faster than ground speed, sweeping crop across the sickle.
- A faster reel speed may be necessary in leaning or down crop.
- Excessive shattering of grain heads or crop loss over the header back tube may be indications that reel speed is too fast.

---

### REEL HEIGHT

- In standing crop, adjust reel height so bat contacts the plants just below the head, and carries material through the sickle onto the drapers.
- Down crop may require a lower reel height to wipe crop off the sickle.
- Bushy crop may require raising the reel to prevent unevenness in delivery.
- Indications that reel may be too low are crop loss over the header back tube, or disturbance of crop on the drapers by the reel bats.

---

### REEL POSITION - FORE & AFT

Reel fore-aft position can be adjusted to suit various crop conditions:

- For straight standing crop, the reel position is normally centered above the cutterbar.
- For crops that are down, tangled, or leaning, move reel ahead of cutterbar.
- Disturbance of crop on the drapers by the reel bats may be an indication that the reel is too far back.

**To adjust reel fore-aft position:**

1. Lower reel so support arms are horizontal.
2. Back off jam nut on positioning screw (A) at each arm.
3. Loosen screw (A) and slide reel mounting channel (B). Pry bar may be used at hole (C).
4. Tighten screw into selected hole position and secure with jam nut.
5. Be sure screw is in the same hole at each arm.
6. Check reel clearance to cutterbar. See Maintenance/Service section.

**NOTE:** For 36' center arm, positioning screw is on top of mounting channel. (There is no jam nut on positioning screw at center arm.)

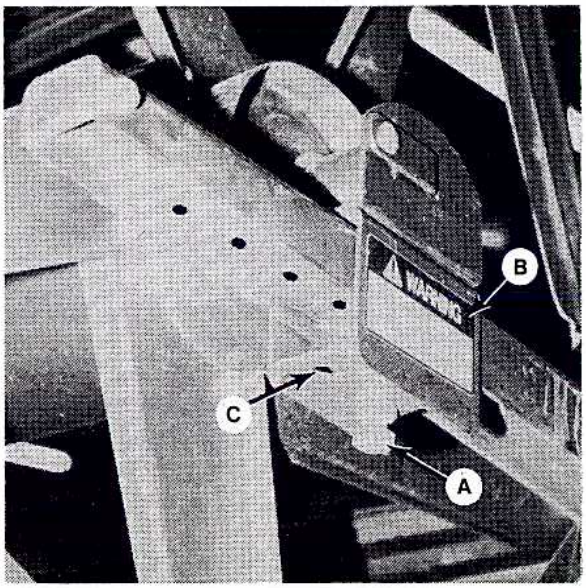


REEL FORE-AFT POSITION ADJUSTMENT

## Operating Variables

DIVIDER ANGLE

The dividers can be angled in or out to provide proper separation and clean entry in a variety of crops. Divider gather is factory set at approximately 1.5 inches (40 mm). In tangled crops like canola, it may be necessary to reduce gather.

To adjust angle, loosen hardware (A), position divider and tighten hardware.

**NOTE:** On left side, ensure that front hinge pin of side shield remains covered.

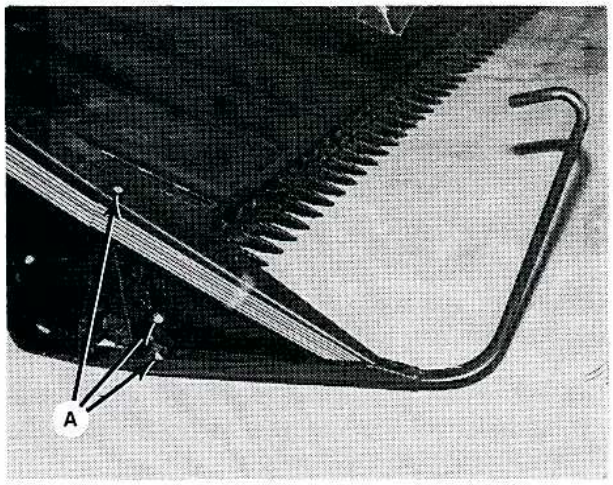


DIVIDER ANGLE ADJUSTMENT

## Shut Down Procedure

**CAUTION: Before leaving operator's seat for any reason:**

1. **Park on level ground if possible.**
2. **Lower the header and reel fully.**
3. **Place all controls in NEUTRAL or PARK.**
4. **Disengage header drive.**
5. **Engage the park brake.**
6. **Stop engine and remove key from ignition.**
7. **Wait for all movement to stop.**

## Windrowing

The factors listed below will all affect the formation of the windrow. You will quickly become adept at adjusting these variables to achieve the desired results.

**NOTE:** Crop condition is a major factor in forming a good windrow. While standing or uniformly leaning crops can generally be easily formed into an acceptable windrow, such is not the case when stalks are tangled or leaning in several directions.

### GROUND SPEED

Ground speed should be such that the sickle can cut crop smoothly and cleanly, while giving the desired windrow formation.

Ground speed affects the orientation of stalks in the windrow. Increasing ground speed will cause the configuration of the windrow to go from parallel formation to herringbone or dovetail. See "Windrow Characteristics" in this section.

### CUTTING HEIGHT

For grain crops the windrow should normally be laid on stubble from 6 to 8 inches high (150 - 200 mm).

Benefits of a stubble of this height:

- Allows free circulation of air under the windrow for more even drying.
- Supports the windrow without bending.
- Keeps grain heads from contacting ground. Heads that touch the ground are difficult to pick up and will sprout in damp weather.

### HEADER ANGLE

Steeper draper angles tend to form herringbone or dovetail configurations, while flatter draper angles form parallel or fantail windrows. See "Windrow Characteristics" in this section.

### DRAPER SPEED

Draper speed affects the orientation of stalks in the windrow. Faster draper speeds will tend to form herringbone or dovetail configurations. See "Windrow Characteristics" in this section.

### REEL SPEED

Reel speed affects the smoothness and evenness of the windrow. Operating the reel too fast or too slow relative to ground speed will cause bunching.

## Windrowing

### DELIVERY OPENING

The width and position of the delivery opening affects the width and configuration of the windrow. The decision to widen or narrow the center delivery opening; or whether or not to double windrow should be based on the following factors:

- combine pick-up capability
- type and yield of crop
- weather conditions (rain humidity, wind)
- drying time available

See "Windrow Characteristics" for the strengths and weaknesses of the various windrow configurations with respect to these factors. See "Delivery Opening Width" under Operating Variables for opening width adjustment procedure.

### DECK SHIFT - TRIPLE DELIVERY HEADERS

The triple delivery header allows the operator to control deck position and draper rotation from the windrower cab. See your Windrower Tractor Operator's manual for identification of the deck shift control.

### DOUBLE WINDROWING

The Triple Delivery Harvest Headers have double windrow capability. This allows cutting one round delivering to the right hand end (C), then shifting to left end delivery (D) and laying the second windrow beside the first.

Larger capacity combines can then pick up twice as much material in a single pass; saving time and fuel.

**NOTE:** For ease of operation, the short stationary deck at the right end of the header provides clearance between the right-end delivered windrow and standing crop.

**NOTE:** For 30' headers with transport option: If gauge wheel beam interferes when laying a swath at the right hand end (and beam cannot be moved inboard), move beam support to storage position as shown to clear swath. Install pin at (E).

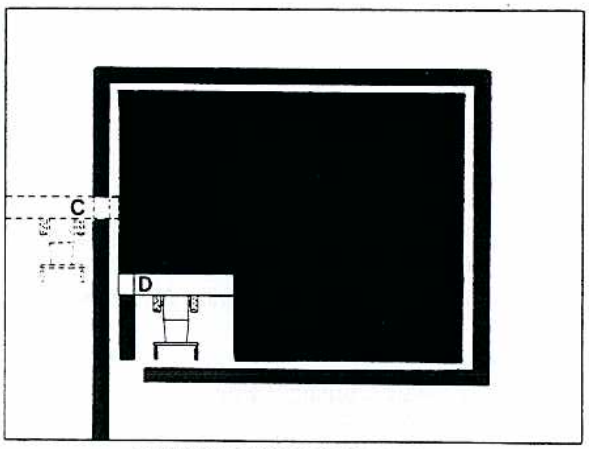


DOUBLE WINDROWING

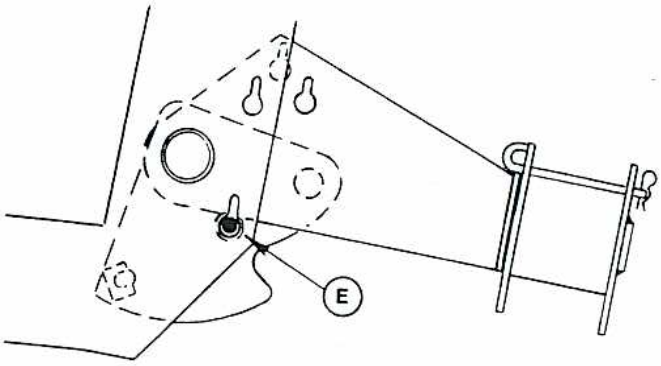


30' TRANSPORT OPTION STORAGE:
DOUBLE WINDROWING

## Windrowing

### WINDROW CHARACTERISTICS

There are three basic criteria by which the quality of a windrow is measured:

1. Weight Distribution - heads and stalks distributed evenly across full width of windrow.
2. Good Curing - a loose, open windrow for better drying.
3. Good Weatherability - a well formed windrow that supports heads off the ground and holds together in extreme weather conditions.

### HERRINGBONE WINDROW

The most desirable form of windrow, stalks are crossed and interwoven. Heads are distributed across full width of windrow. This windrow can be formed by center delivery only. Windrow rating:

Weight Distribution: Good
Curing Characteristics: Good
Weatherability: Excellent

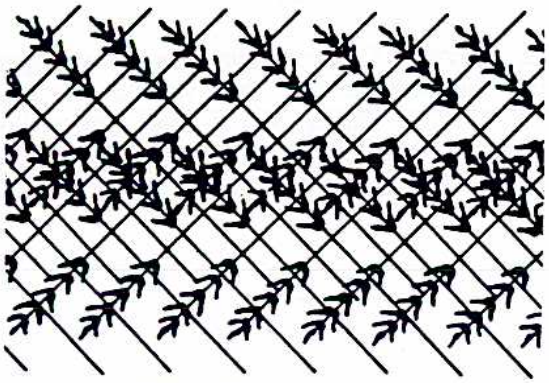

HERRINGBONE WINDROW

### FANTAIL WINDROW

The stalk tips are crossed in the center and heads are in line along outside edges. This windrow can be formed by center delivery only. Windrow rating:

Weight Distribution: Fair
Curing Characteristics: Fair
Weatherability: Fair

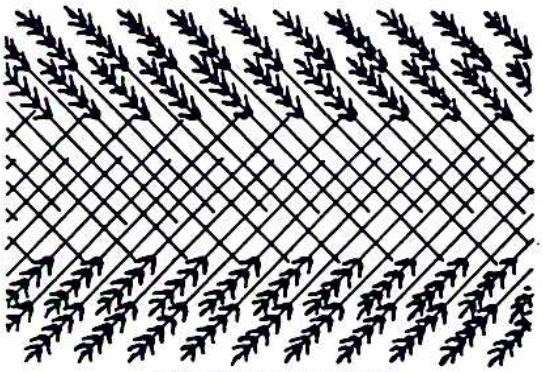

FANTAIL WINDROW

### DOVETAIL WINDROW

The stalk tips are lined along outside edges of windrow and heads are crossed in center. This windrow can be formed by center delivery only. Windrow rating:

Weight Distribution: Poor
Curing Characteristics: Fair
Weatherability: Poor

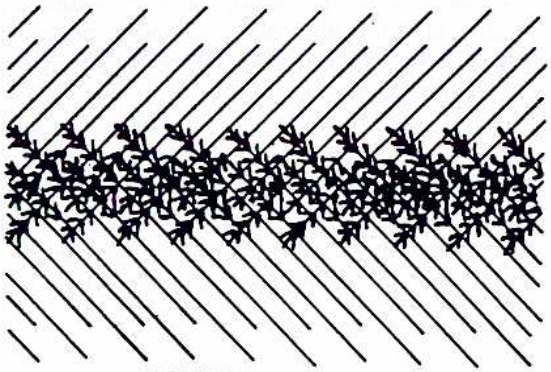

DOVETAIL WINDROW

## Windrowing

WINDROW CHARACTERISTICS (continued)

### PARALLEL WINDROW

The stalks are parallel to windrow and heads evenly distributed across width of windrow. This windrow can be formed by center delivery or end delivery. Windrow rating:

Weight Distribution: Good
Curing Characteristics: Good
Weatherability: Good

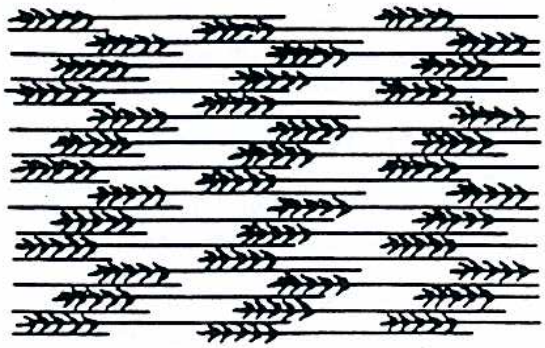

PARALLEL WINDROW

### 45° DIAGONAL WINDROW

The stalk tips are lined along one edge and heads are along opposite edge, 45° to windrow perpendicular. This windrow can be formed by end delivery only. Windrow rating:

Weight Distribution: Poor
Curing Characteristics: Fair
Weatherability: Poor

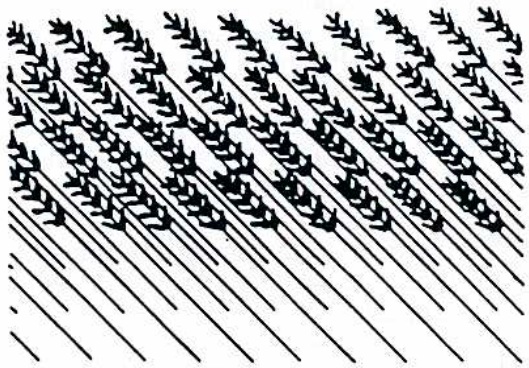

45° DIAGONAL WINDROW

### 75° DIAGONAL WINDROW

The stalks are closer to parallel than the 45° windrow. Stalk tips are lined along one edge with heads opposite, 75° to windrow perpendicular. This windrow can be formed by end delivery only. Windrow rating:

Weight Distribution: Fair
Curing Characteristics: Good
Weatherability: Fair

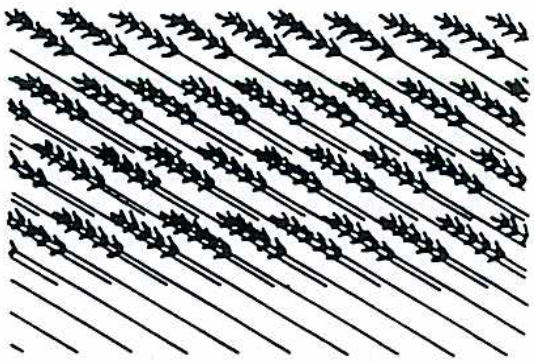

75° DIAGONAL WINDROW

## Transporting the Header on Windrower or Combine

**WARNING: Do not drive windrower or combine with header attached on a road or highway at night, or in conditions which reduce visibility, such as fog or rain. The width of the header may not be apparent under these conditions.**

**CAUTION:**

1. **Check local laws for width regulations and lighting or marking requirements before transporting on roads.**
2. **Follow all recommended procedures in your Windrower or Combine Operator's Manual for transporting, towing etc.**
3. **Disengage header drive clutch when travelling to and from the field.**
4. **For headers with gauge wheels, but without transport option, secure gauge wheels in position (A).**
   **NOTE: For 30' header on combine: Remove bolts from holes (F) at left hand leg to allow wheels to be moved into transport/storage position. Replace bolts when returning to field position to prevent gauge wheel contact with driveline.**
5. **For headers with transport option: When transporting while attached to windrower or combine, wheels remain in field position. If necessary to raise wheels to clear bridge posts, etc., move to storage position (E). (See NOTE above.) For towing transport, see next page.**

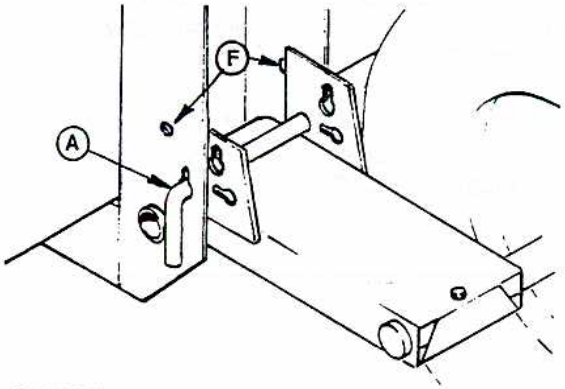


GAUGE WHEELS - TRANSPORT POSITION (WITHOUT TRANSPORT OPTION)

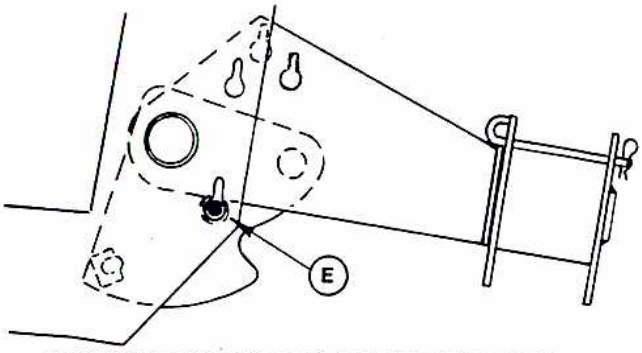


TRANSPORT OPTION GAUGE WHEELS - STORAGE POSITION (R/H SHOWN)

6. **Before driving windrower or combine on a roadway, be sure flashing amber lamps, red tail lamp and head lamps are clean and working properly. Always use these lamps on roads to provide adequate warning to other vehicles.**
7. **Do not use field lamps on roads, other drivers may be confused by them.**
8. **Before driving on a roadway, clean slow moving vehicle emblem and reflectors. Adjust rear view mirror and clean windows.**
9. **Lower the reel fully and raise header unless transporting in hills. (See point #10.) Maintain adequate visibility and be alert for roadside obstructions, oncoming traffic and bridges.**
10. **When travelling down hill, reduce speed and keep header at a minimum height. This provides maximum stability if forward motion is stopped for any reason. Raise header completely at bottom of grade to avoid contacting ground.**
11. **Travel speed should be such that complete control and machine stability are maintained at all times.**

**LIFTING FROM FIELD POSITION**

For lifting the header from field position, install header lifting arm (B), available from your dealer. This feature is useful for loading/unloading in mobile custom harvest installations.

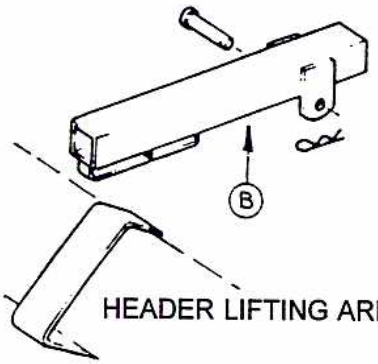


HEADER LIFTING ARM

## Gauge Wheels / Transport Option

Some 30 and 36 foot headers are equipped with the transport option which allows pivoting the gauge wheels 90° to allow towing the header sideways.

### CONVERTING FROM FIELD POSITION TO TRANSPORT

1. Move reel fully back on support arms. See "Reel Position - Fore & Aft" for adjustment details.

2. Raise header fully.

**DANGER: To avoid bodily injury or death from unexpected start-up or fall of raised header, stop engine, remove key and engage header lift cylinder stops before going under header for any reason.**

At R/H end:

3. Remove L-pin (L) at R/H wheel support, lower wheel beam and place L-pin in storage position as shown.

4. • Remove hair pins and bar (D) from field position (in welded plates on beam).
   • Rotate wheel beam 90° to position under header as shown.

5. Raise cutterbar support (E) fully. (Top edge of support should be directly beneath guard bolts.)

6. Position head of bar (F) on anchor (G). Install bar (D) (removed in step 4) and secure with two hairpins.
   **NOTE:** Head pivots on bar (F) to allow proper fit in all applications. Do not over-tighten pivot hardware.

At L/H end:

7. Remove pin (B) from field position at left wheel support and remove pin (A), allowing caster to lower. Rotate wheel 90° to under side of header.

8. Raise wheel support up to about 45°. Install pin (B) in conversion position as shown (through support and spring plate).

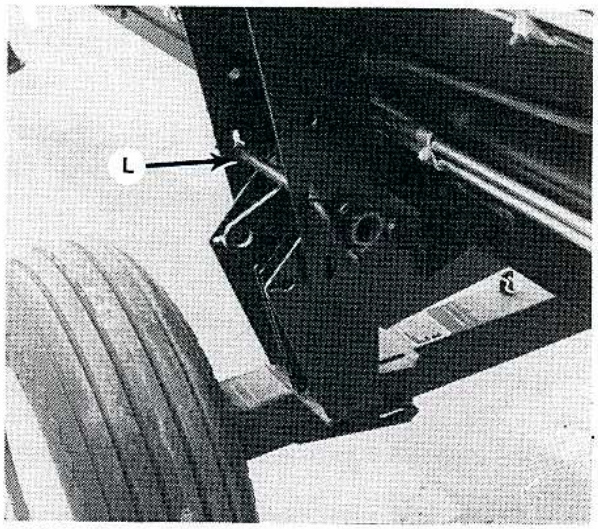

R/H WHEEL BEAM - TRANSPORT POSITION

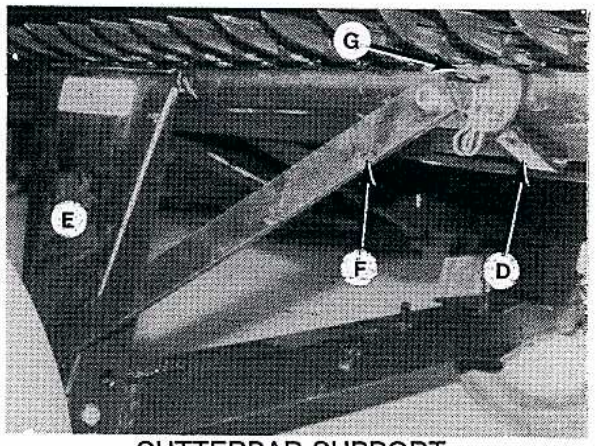

CUTTERBAR SUPPORT

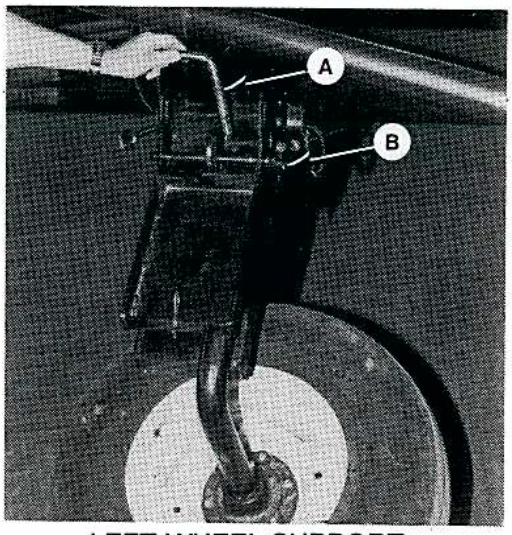

LEFT WHEEL SUPPORT - CONVERSION POSITION

## Gauge Wheels / Transport Option

CONVERTING FROM FIELD POSITION TO TRANSPORT

At L/H end (continued):

9. Slide bar (C) to caster side of support. (Bar stops caster from sliding up.)

10. Move pin (B) at left wheel support from conversion position to transport position (through header leg as shown).

11. Disengage header lift cylinder stops and slowly lower header until wheels are on the ground. Block the tires to prevent header rolling and to ensure left wheel remains under header, tracking approximately parallel to cutterbar.

12. At right end, check that cutterbar support contacts guards.

13. Detach header from power unit. See Windrower Tractor or Combine Adapter Operator's Manual. Be sure reel is fully down and all hydraulic lines are properly disconnected and stored. If combine adapter is to remain with the header, ensure float lock-outs are engaged.

14. Remove hitch pole (G) from inside frame tube. Take care not to snag hydraulic line or wiring harness.

15. Place hitch over left wheel caster. Position hitch against stop welded on caster and install pin (A) (removed in step 7) with hairpin. **IMPORTANT:** Be sure pin is inserted far enough to allow pin handle to hang down as shown.

16. Attach wiring harness (H) at left caster.

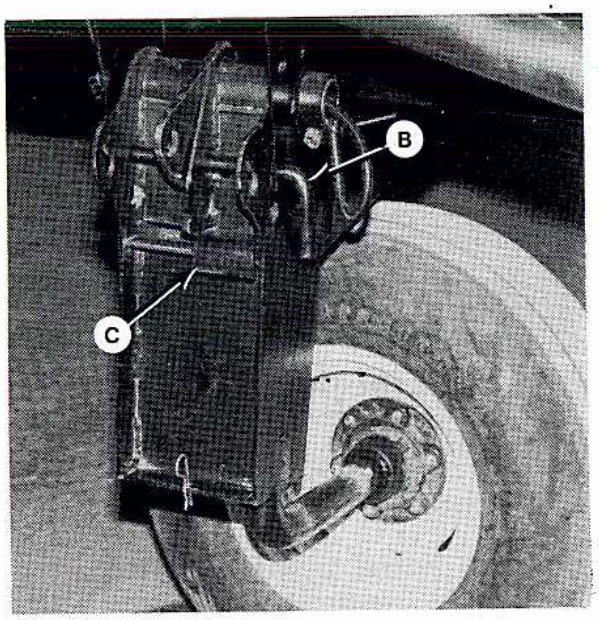


LEFT WHEEL - TRANSPORT POSITION

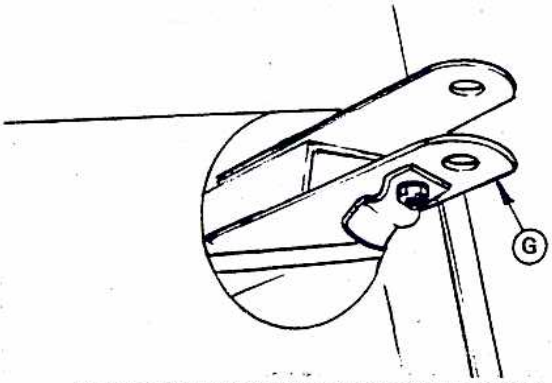


REMOVE HITCH FROM FRAME TUBE

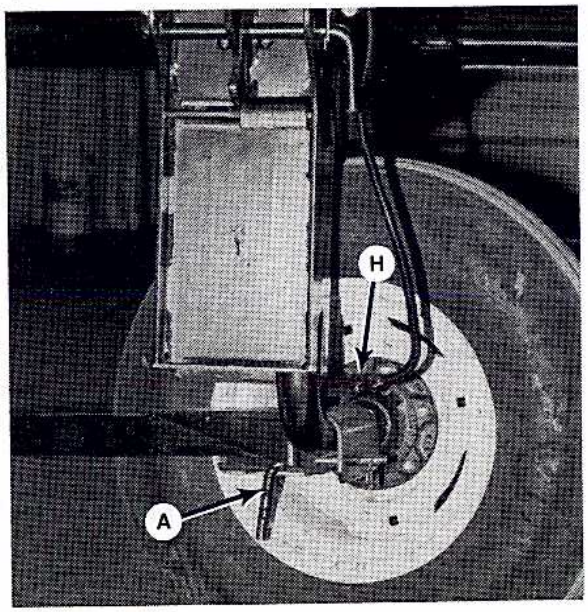


ATTACH HITCH AND WIRING HARNESS

## Gauge Wheels / Transport Option

### ATTACHING TO TOWING VEHICLE

**CAUTION: To avoid bodily injury and/or machine damage caused by loss of control:**

1. **To ensure adequate braking performance and control, do not tow with a vehicle weighing less than 5000 lbs. (2300 kg).**
2. **To increase header stability in transport, ensure that reel is down and fully back on support arms.**
3. **Check that all pins are properly secured in transport position at wheel supports, hitch and cutterbar support.**
4. **Check tire condition and pressure prior to transporting.**
5. **Connect hitch to towing vehicle with a proper hitch pin with a spring locking pin or other suitable fastener.**
6. **Attach hitch chain to towing vehicle. Adjust chain length to remove all slack except what is needed for turns.**
7. **Connect header wiring harness 7-pole plug to mating receptacle on towing vehicle. (The 7-pole receptacle is available from your dealer parts department.)**
8. **Ensure lights are functioning properly, and clean the slow moving vehicle emblem and other reflectors.**

### TOWING THE HEADER

**CAUTION: THIS IS INTENDED AS A LOW SPEED TRANSPORT. To avoid bodily injury and or machine damage caused by loss of control:**

1. **Do not exceed 20 mph (30 km/h). Reduce transport speed for slippery or rough conditions.**
2. **Turn corners only at very low speeds. While cornering, header stability is reduced as front wheel moves to the left.**
3. **Obey all highway traffic regulations in your area when transporting on public roads. Use flashing amber lights unless prohibited by law.**

**NOTE:** If rear wheels are misaligned, causing header to tow at an angle, move bar (F) to alternate position (E) on cutterbar support.

### TRANSPORTING ON A TRAILER

**IMPORTANT:** When trailer transporting a header equipped with the transport option, support the long end of R/H wheel beam. Failure to do so may result in damage to transport components.

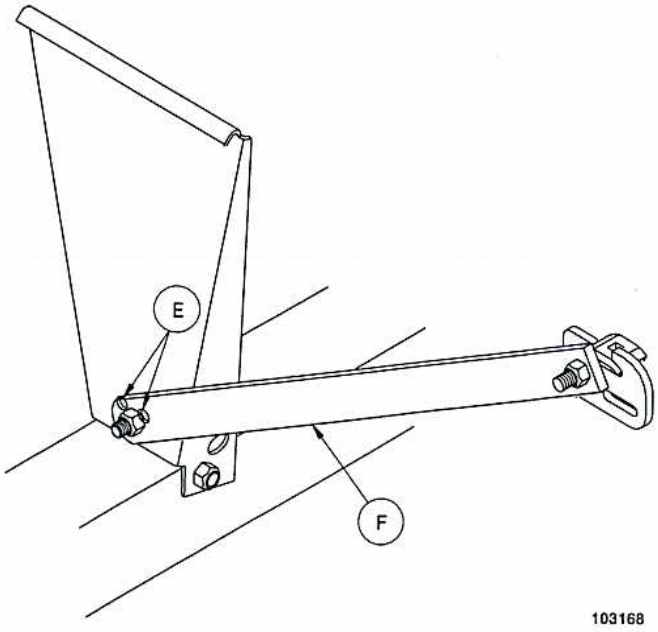


CHOOSE POSITION FOR BEST ALIGNMENT

## Gauge Wheels / Transport Option

### CONVERTING FROM TRANSPORT TO FIELD POSITION

1. Block the tires to prevent header rolling. Be sure left wheel is straight (tracking parallel to cutterbar).

2. Remove pin securing hitch to left wheel caster, and detach wiring harness at 4-way connector. (Store header section plug inside wheel support tube.) Remove hitch and store in frame tube as follows:
   - Insert caster clevis end of hitch first, with open side of clevis pointed up.
     **NOTE:** Hitch is designed to be stored in tube upside down from orientation in towing position.
   - Slide hitch into frame tube, taking care not to snag hydraulic line and wiring harness. Do not rotate hitch as it is pushed into frame tube.
   - Secure drawbar end of hitch by engaging retainer (J) on bar welded inside frame tube.

3. Attach header to power unit. See Windrower Tractor or Combine Adapter Operator Manual.

4. Raise header fully.

   **DANGER: To avoid bodily injury or death from unexpected start-up or fall of raised header, stop engine, remove key and engage header lift cylinder stops before going under header for any reason.**

5. At left wheel support, remove pin (B) from transport position and raise wheel support up to about 45°. Install pin (B) in conversion position through support and spring plate as shown.
6. Slide bar (C) to other side of support.

7. Rotate left wheel caster 90° to field position and push caster fully up to engage slot in wheel support. Install pin (A) (removed from hitch in step 2) to hold caster up. Store hairpin in bottom flange of support.

8. Move pin (B) at left wheel support from conversion position to one of two field positions. (See "Gauge Wheel Field Positions" on page 18.) This also locks pin (A) in field position.

**NOTE:** Left wheel caster can be installed at left or right side of wheel support. This positions the left wheel inboard or outboard of wheel support as desired. See Assembly section for installation details.

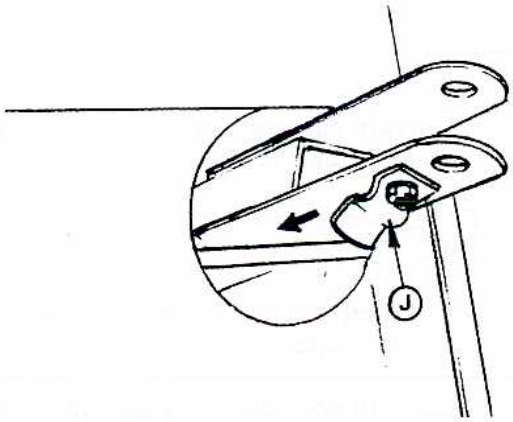


STORE HITCH IN FRAME TUBE

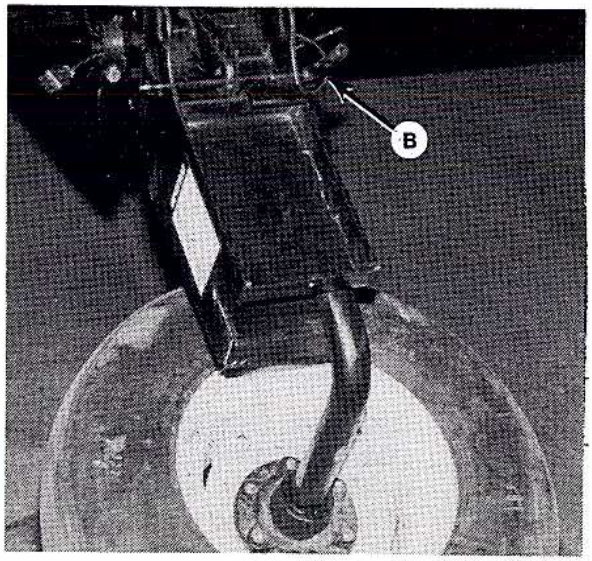


LEFT WHEEL - CONVERSION POSITION

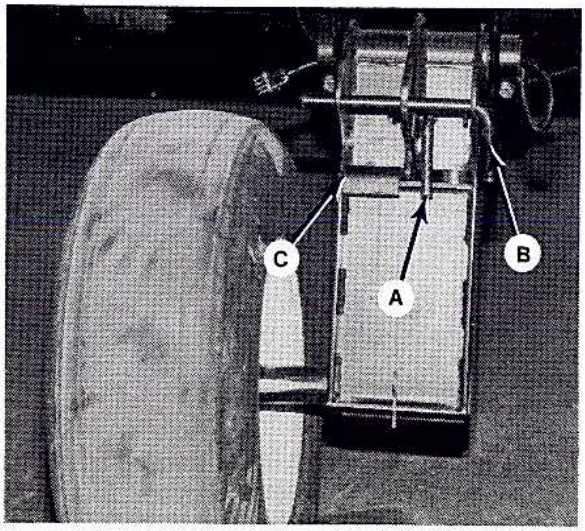


LEFT WHEEL - FIELD POSITION

## Gauge Wheels / Transport Option

**CONVERTING FROM TRANSPORT TO FIELD POSITION (continued)**

9. At right hand dual wheel assembly:
   - Remove hairpins and bars (F) and (D) from transport position at cutterbar anchor.
   - Lower cutterbar support (E) and rotate bar (F) to storage position shown. Secure with hairpin.

10. Rotate wheel beam 90°, moving wheel from under cutterbar to field position.
    **NOTE:** The pivot shaft on the right wheel beam can be installed at right or left side of wheel support. This allows field positioning of the beam either "inboard" (towards center of header) or "outboard" (towards end of header). See Assembly section for installation details.

11. Install bar (D) and two hair pins in field position shown, contacting edge of support (J). This prevents beam from swinging under raised header in field position.

12. Raise beam and install L-pin (L) in one of two field positions. (See "Gauge Wheel Field Positions" on page 18.)

13. Lower header to cutting height and move reel forward to desired position.

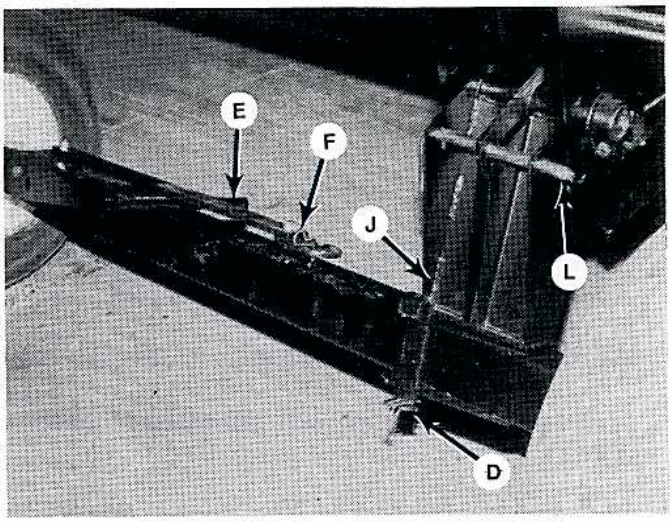

R/H WHEELS - FIELD POSITION
(INBOARD POSITION SHOWN)

---

## Storage Procedure

Do the following at the end of each operating season:

1. Clean the header thoroughly.

**CAUTION: Never use gasoline, naphtha or any volatile material for cleaning purposes. These materials may be toxic and/or flammable.**

2. **Cover cutterbar and sickle guards to prevent injury from accidental contact.**

Also:

3. Store machine in a dry protected place if possible. If machine is stored outside, cover with a waterproof canvas or other protective material.
4. If machine is stored outside, remove drapers and store in a dark, dry place.
   **NOTE:** If drapers are not removed, store header with cutterbar lowered so water/snow will not accumulate on drapers. This accumulation of weight puts excessive stress on drapers and header.
5. Lower header onto blocks to keep cutterbar off the ground.
6. Lower reel completely. If stored outside, tie reel to frame to prevent rotation caused by wind.
7. Repaint all worn or chipped painted surfaces to prevent rust.
8. Lubricate the machine thoroughly, leaving excess grease on fittings to keep moisture out of bearings. Oil cutterbar and apply grease to exposed threads and sliding surfaces of components.
9. Check for worn or broken components and repair or order replacements from your dealer. Attention to these items right away will save time and effort at beginning of next season.
10. Replace or tighten any missing or loose hardware. See Specifications section for torque charts.

## SERVICE PROCEDURES

**CAUTION: To avoid personal injury, before servicing machine or opening drive covers:**

1. Fully lower header and reel. If it is necessary to service in the raised position, first engage header lift cylinder stops and reel props.
2. Disengage header drive clutch.
3. Stop engine and remove key.
4. Engage park brake.
5. Wait for all moving parts to stop.

Park on level surface when possible. Block wheels securely. Follow all recommendations in your Windrower or Combine Operator's Manual.

Wear close-fitting clothing and cover long hair. Never wear dangling items such as scarves or bracelets.

Wear protective shoes with slip resistant soles, a hard hat, protective glasses or goggles and heavy gloves.

Be prepared if an accident should occur. Know where the first aid kit and fire extinguisher are located and how to use them.

Keep the service area clean and dry. Wet or oily floors are slippery. Wet spots can be dangerous when working with electrical equipment. Be sure all electrical outlets and tools are properly grounded.

Use adequate light for the job at hand.

Replace all shields removed or opened for service.

**NOTE:** The left hand drive shield, in the open position, rests in a hinge "pocket" to prevent it from falling. To close left hand drive shield, lift up on shield to clear hinge pocket at (B), then lower shield and secure with rubber latch

Use only service and repair parts made or approved by the equipment manufacturer. Substituted parts may not meet strength, design or safety requirements.

Keep the header clean. Never use gasoline, naphtha or any volatile material for cleaning purposes. These materials may be toxic and/or flammable.

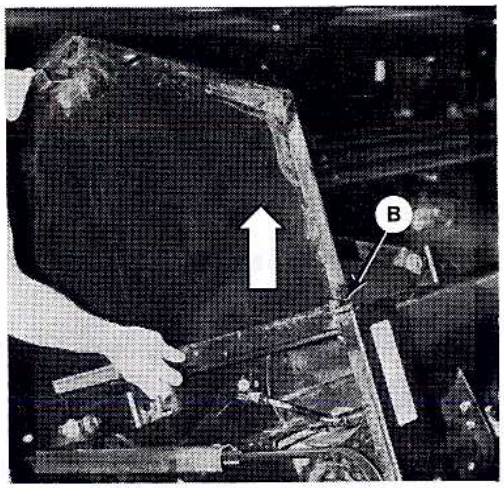

CLOSING L/H DRIVE SHIELD

## RECOMMENDED LUBRICANTS

### GREASE

Use an SAE Multi-Purpose High Temperature Grease with Extreme Pressure (EP) Performance and containing at least 1.5% molybdenum disulphide.
Also acceptable is an SAE Multi-Purpose Lithium Base Grease.

### WOBBLE BOX LUBRICANT

In sickle drive wobble box, use SAE 85W-140 gear lubricant. (API Service Classification GL-5)

**CAPACITIES:** Wobble Box - 900 mL (1.0 U.S. quart)

### STORING AND HANDLING LUBRICANTS

Your machine can operate at top efficiency only if clean lubricants are used. Contaminant in lubricants is the most likely cause of bearing and hydraulic system failure. Use clean containers to handle all lubricants. Store lubricants in an area protected from dust, moisture and other contaminants. Keep hydraulic couplers and connectors clean.

## SEALED BEARING INSTALLATION

1. Clean shaft and coat with rust preventative.
2. Install flangette, bearing, flangette and lock collar. The locking cam is only on one side of the bearing.
3. Install and tighten the flangette bolts.
4. When the shaft is located correctly, lock the lock collar with a punch. The collar should be locked in the same direction the shaft rotates. Tighten the set screw in the collar.
5. Loosen the flangette bolts on the mating bearing one turn and re-tighten. this will allow the bearing to line up.

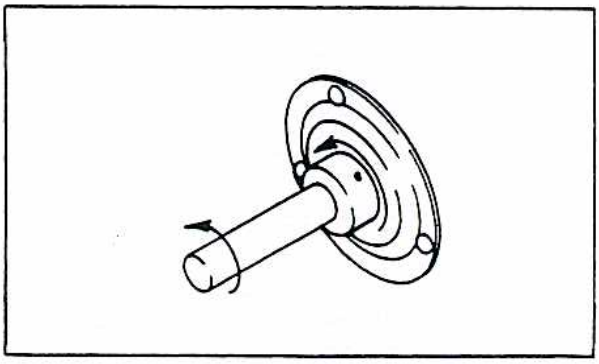

TIGHTEN COLLAR IN DIRECTION SHAFT ROTATES

## GREASING THE HEADER

See "Recommended Lubricants" in this section for recommended greases.
The following greasing points are marked on the header by decals showing a grease gun (A), and grease interval (B) in hours of operation. Use the hour meter in the windrower or combine cab and the "Maintenance Checklist" provided to keep a record of scheduled maintenance.

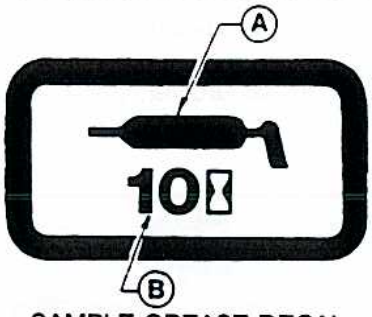


SAMPLE GREASE DECAL

Procedure:
1. Wipe grease fitting with a clean cloth before greasing, to avoid injecting dirt and grit.
2. Inject grease through fitting with grease gun until grease overflows fitting.
3. Leave excess grease on fitting to keep out dirt.
4. Replace any loose or broken fittings immediately.
5. If fitting will not take grease, remove and clean thoroughly. Also clean lubricant passageway. Replace fitting if necessary.

## GREASING THE HEADER (continued)

### 5 Hours or Daily

1. Sickle Head (E) - one fitting

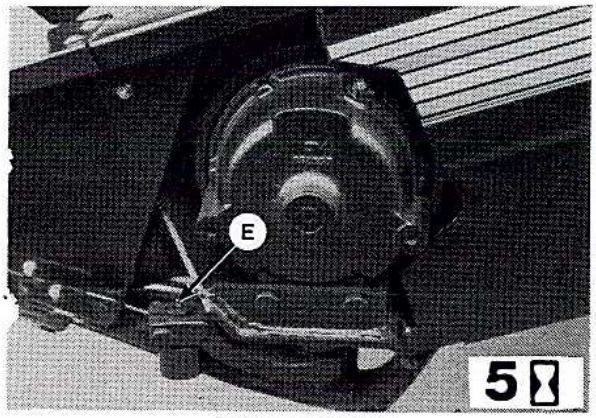


SICKLE HEAD

**DANGER: Stay clear of driveline until all movement has stopped. Entanglement with rotating driveline will cause serious personal injury or death. Avoid loose fitting or dangling clothing.**

### 10 Hours or Daily

1. Secondary Driveline (D) - three fittings

**NOTE:** For windrower, there are two additional 10 Hour fittings at driveline connector shaft.

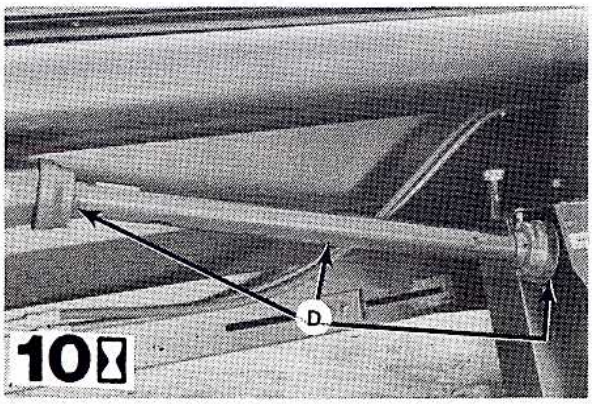


SECONDARY DRIVELINE

### 50 Hours

1. Reel Support Bushing (F) - one fitting (two on 36 ft.)

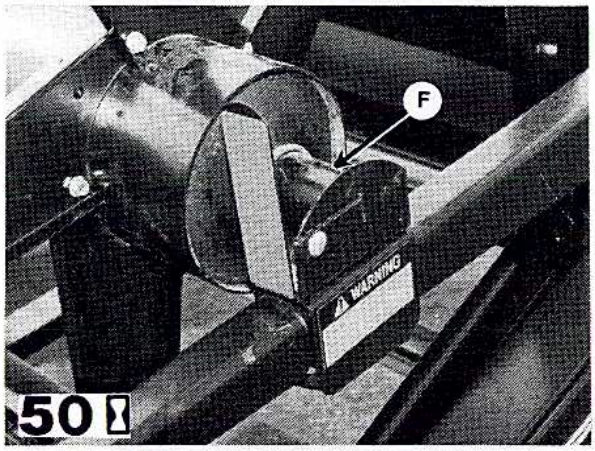


REEL SUPPORT BUSHING

### 100 Hours or Annually

1. Sickle Drive Shaft Support Bearings (C) - two fittings

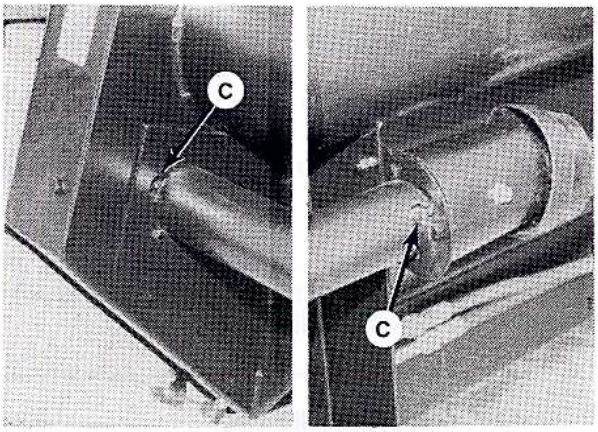


SICKLE DRIVE SHAFT SUPPORT BEARINGS

2. Gauge Wheel Pivot Bushings (H) - one fitting

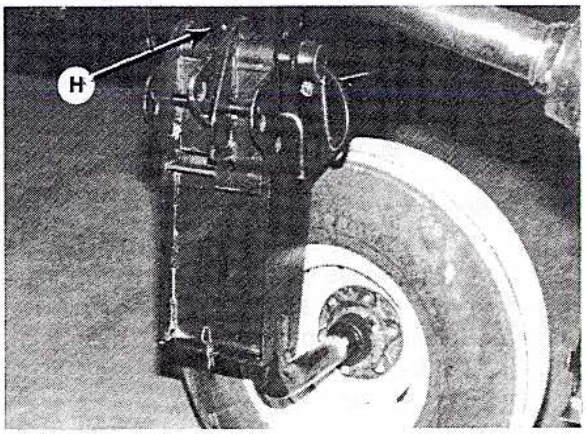


GAUGE WHEEL PIVOT BUSHINGS

## GREASING THE HEADER (continued)

### 500 Hours or Annually

1. Gauge Wheel Hub Bearings (G) - one fitting per wheel

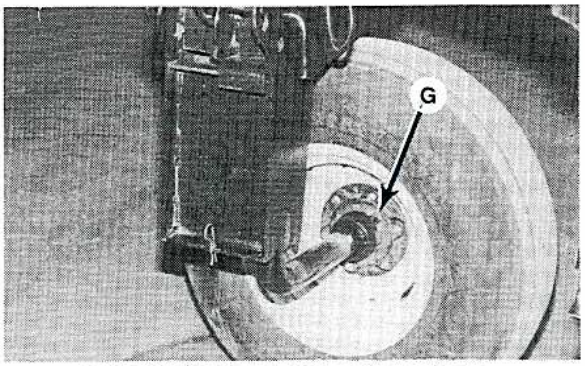


GAUGE WHEEL HUB BEARINGS

---

## HYDRAULIC SYSTEM

### Hydraulic Hoses and Lines

Check hydraulic hoses and lines daily for signs of leaks.

**WARNING: Avoid high-pressure fluids. Escaping fluid can penetrate the skin causing serious injury. Relieve pressure before disconnecting hydraulic lines. Tighten all connections before applying pressure. Keep hands and body away from pin-holes and nozzles which eject fluids under high pressure. Use a piece of cardboard or paper to search for leaks. IF ANY fluid is injected into the skin, it must be surgically removed within a few hours by a doctor familiar with this type of injury or gangrene may result.**

AVOID HIGH-PRESSURE FLUIDS

**IMPORTANT:**

- Ensure all hydraulic couplings are fully engaged before operating header.
- Keep hydraulic coupler tips and connectors clean. Dust, dirt, water and foreign material are the major causes of damage to the hydraulic system.
- To prevent improper mixing of oils: If header is to be switched back and forth from combine to windrower, change oil in Windrower Tractor (or Bi-Directional Tractor) hydraulic system and in Combine Adapter hydraulics reservoir to match Combine hydraulic system. See your Tractor and Combine Operator's Manuals for total hydraulic system care.

CHECK PROPERLY FOR LEAKS

### Sequence Valves - Triple Delivery Headers

Valve (A) should operate as follows:

When deck shift is activated; drapers stop turning until deck shift is completed, then start turning in reverse direction.

If drapers start turning before deck shift is completed, decrease gap (B). If drapers do not start turning again after deck shift is completed, increase gap (B).

To adjust gap:

1. Loosen opposite end of hose (C) to allow it to swivel.
2. Adjust nut (D) to vary gap (B) as above.
3. Tighten hose (C).

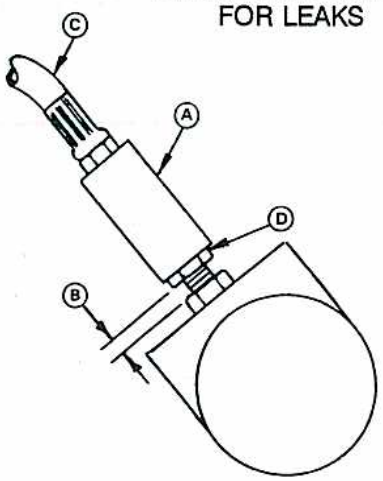


SEQUENCE VALVE: TD HEADERS

HYDRAULIC SYSTEM (continued)

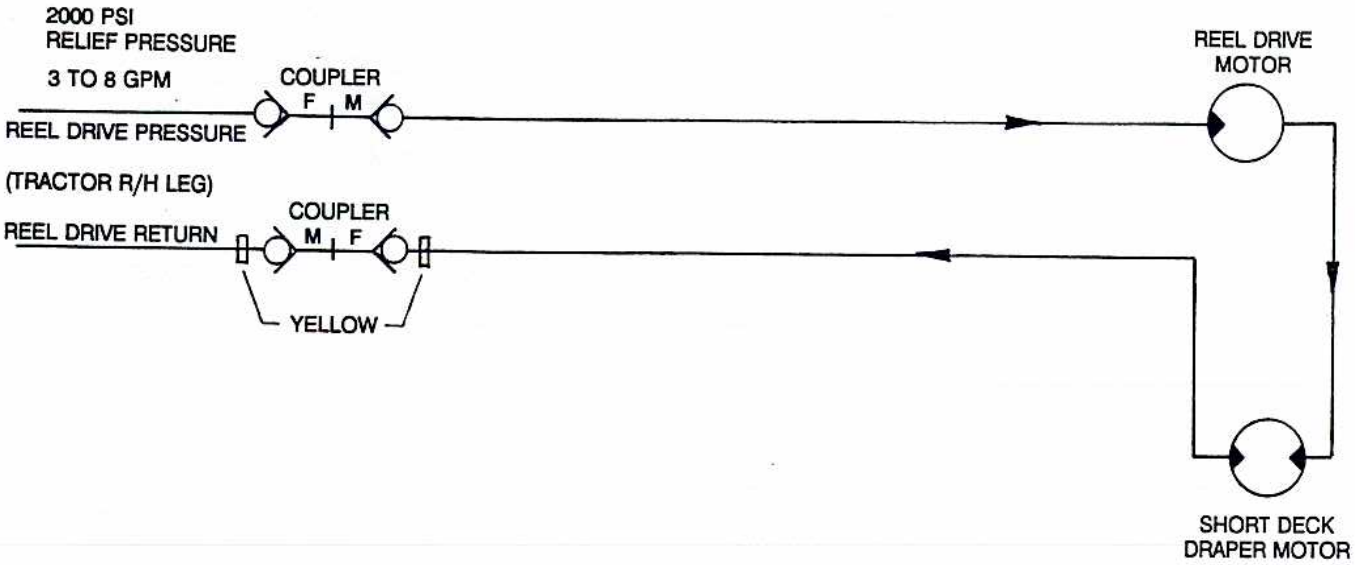


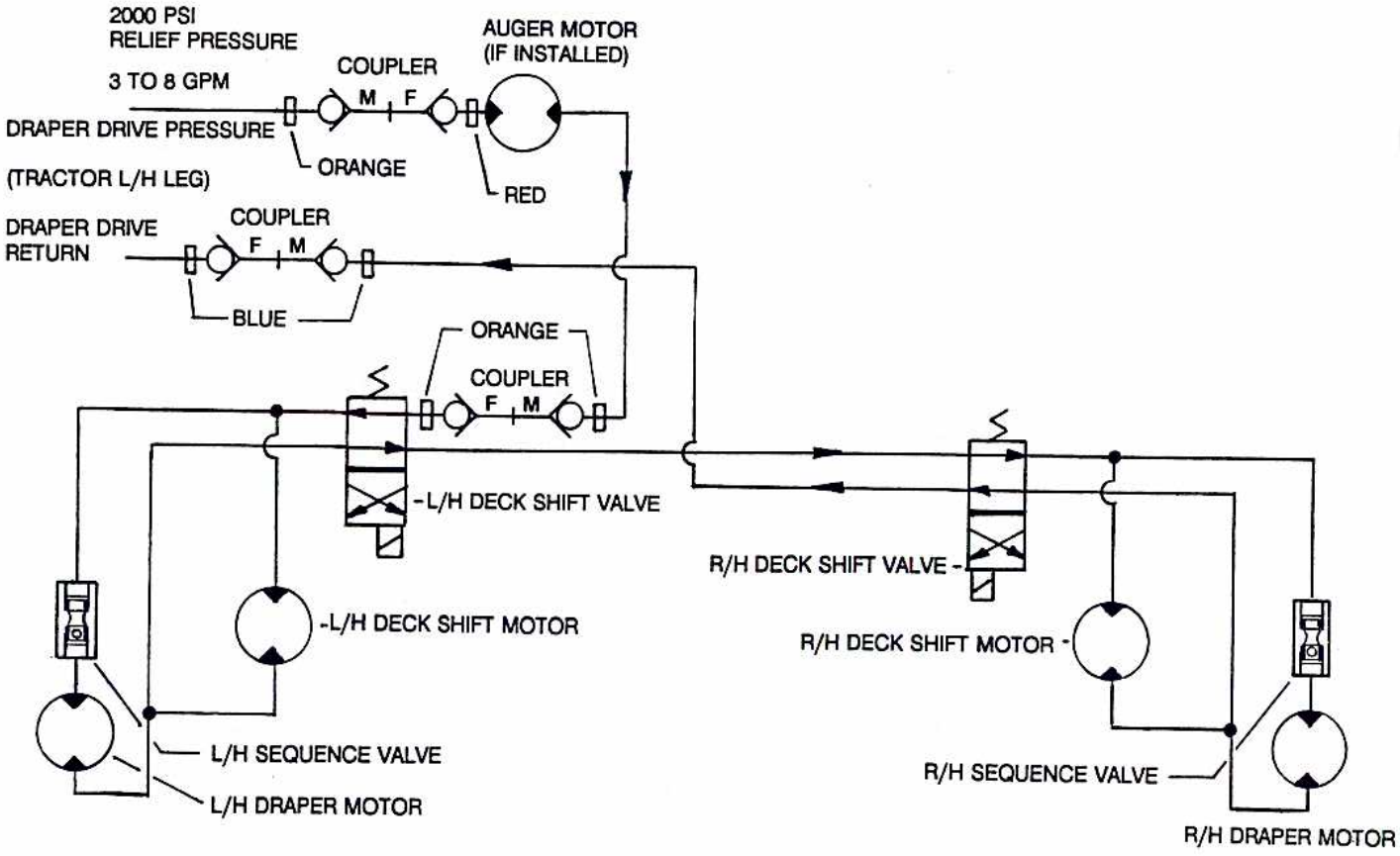


TRIPLE DELIVERY HEADER HYDRAULICS: WINDROWER

**HYDRAULIC SYSTEM (continued)**

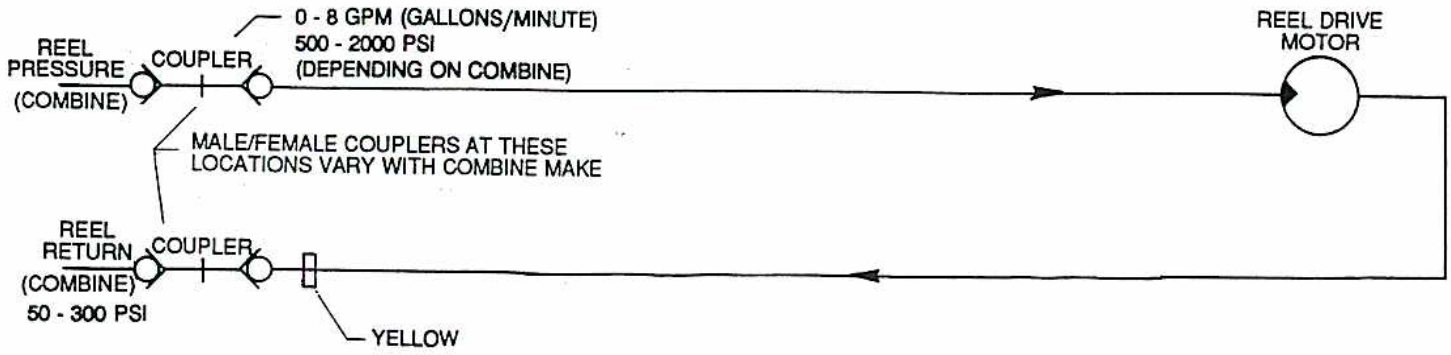


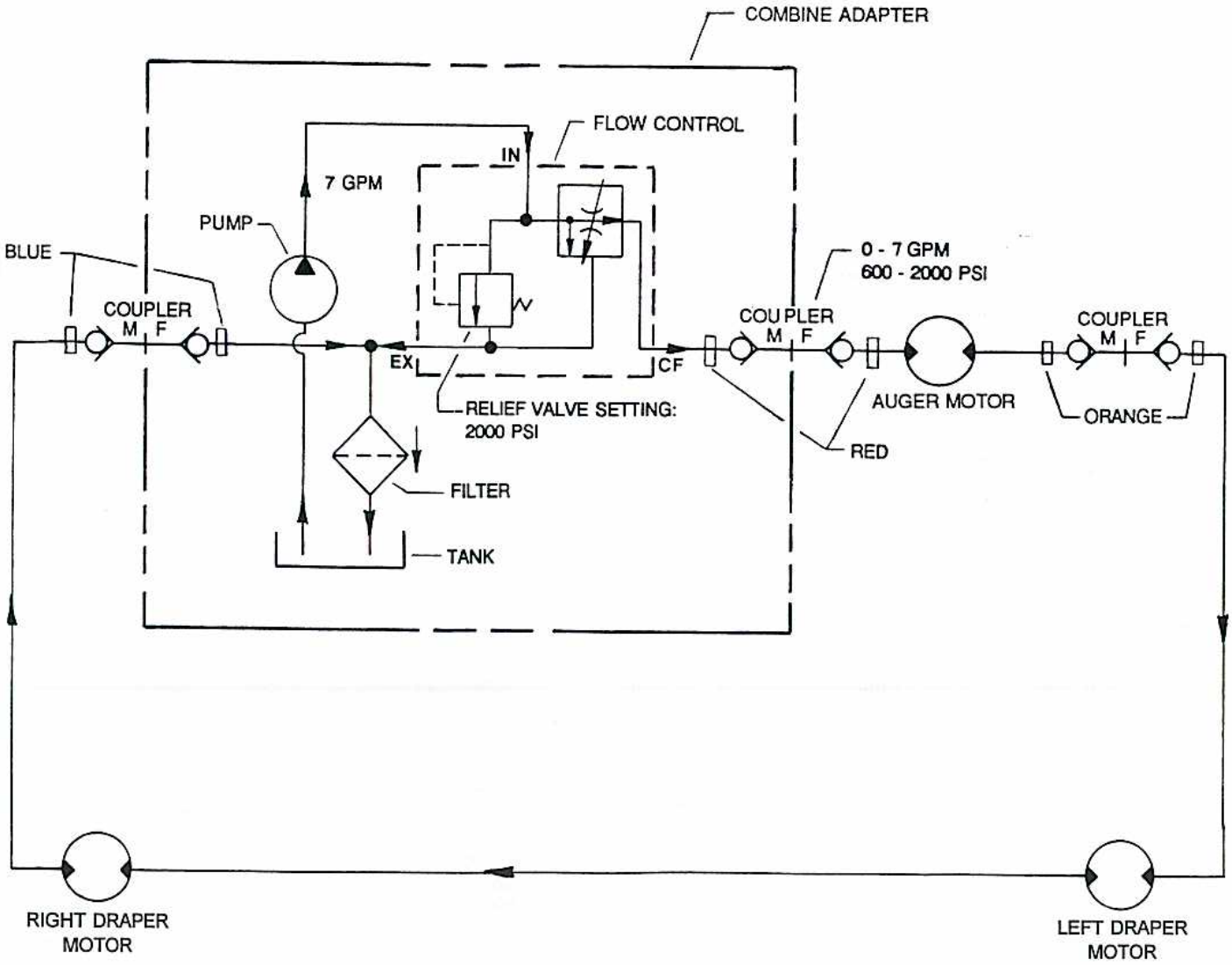


DOUBLE DELIVERY HEADER HYDRAULICS: COMBINE

## ELECTRICAL SCHEMATIC: Triple Delivery Headers

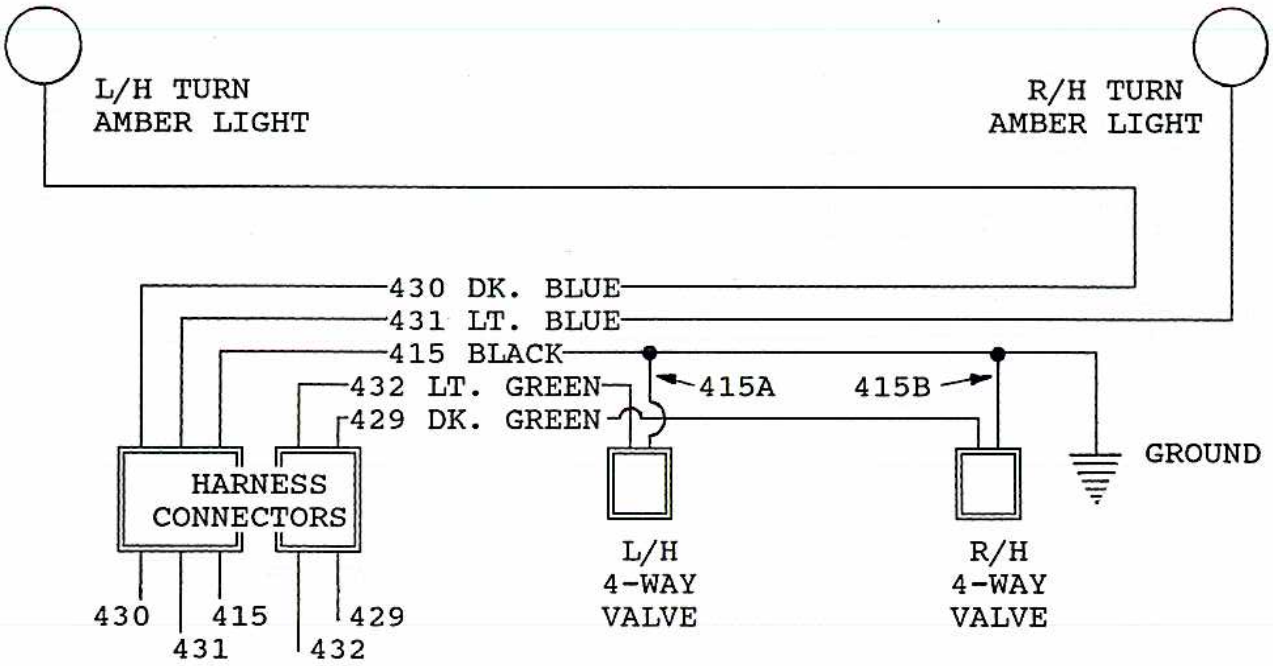


## SICKLE AND SICKLE DRIVE

**WARNING: Keep hands clear of the area between guards and sickle at all times.**

**CAUTION: Wear heavy gloves when working around or handling sharp knives.**

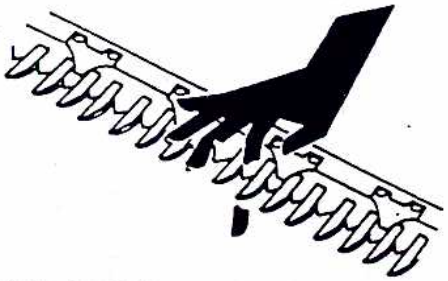

KEEP HANDS AWAY FROM SICKLE

### Sickle Lubrication

Apply SAE 10 or equivalent light weight oil daily (one or two drops per section) along entire length of sickle.

**NOTE:** Do not oil sickle if operating in sandy conditions. Oil will cause sand to adhere to sickle components, resulting in excessive wear.

In some crops, like flax, it may be necessary to wash off the gum that adheres to the sickle with diesel fuel or water.

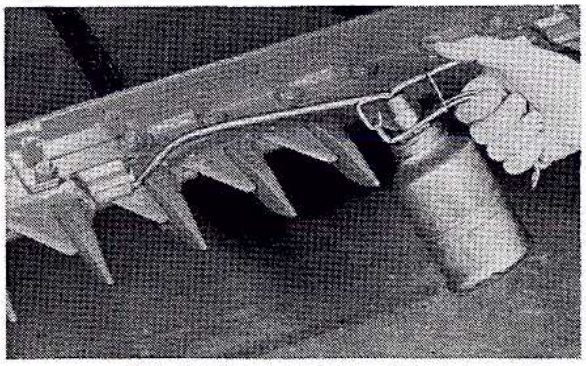

OIL SICKLE DAILY EXCEPT IN SANDY SOIL

## SICKLE AND SICKLE DRIVE (continued)

### Sickle Sections

Check daily that sections are firmly bolted to the sickle back and are not worn or broken. Replace as required.

To replace sickle section:

1. A worn or broken sickle section (A) can be replaced without removing sickle from cutterbar.

2. Remove lock nuts and lift section off of bolts.

   **IMPORTANT:** Do not mix heavy and light sickle sections on same sickle.

3. Clean any dirt off of sickle back and position new sickle section on bolts. Secure with lock-nuts.

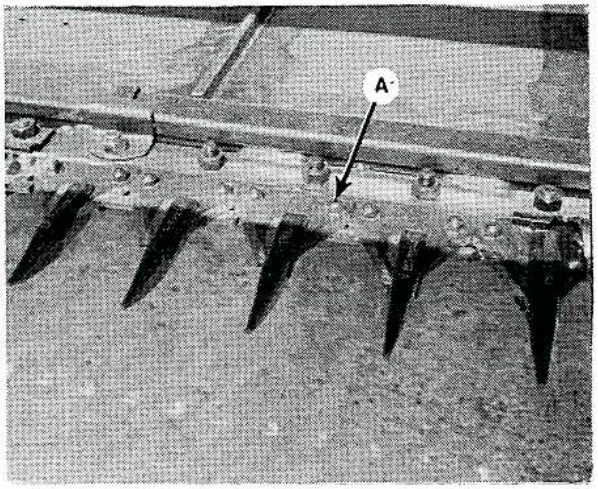


BOLT-ON SECTIONS

---

### To Remove Sickle

**WARNING: Always stand to rear and grasp rear edge of sickle during removal to reduce risk of injury from cutting edges. Wear heavy gloves when handling sickle.**

1. Clean area around sickle head. Stroke sickle to its outer limit and remove bolt (A).

2. Insert screwdriver in slot (B) and pry up on sickle head pin to free sickle.

3. Stroke pitman arm to clear bearing in sickle head. Insert sickle head pin in sickle head to shield bearing from dirt.

4. Wrap a chain around sickle head and pull sickle out.

**NOTE:** For two-piece sickles, remove bolts from splice plate and pull sickle out from both ends.

5. If sickle is not being immediately reinstalled, cover sickle head to shield bearing from dirt.

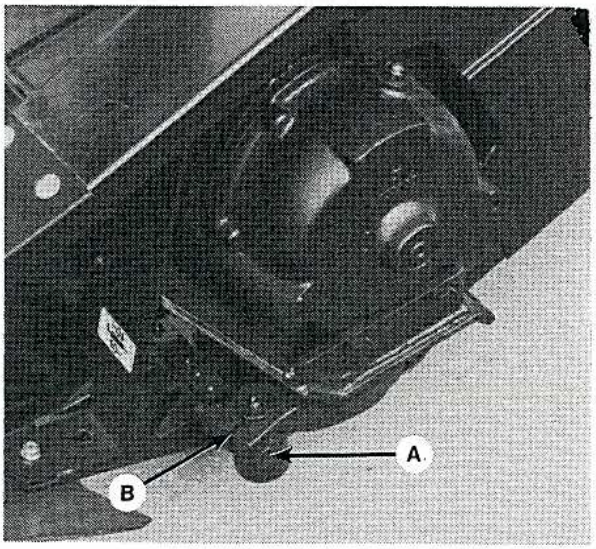


REMOVING SICKLE

## SICKLE AND SICKLE DRIVE (continued)

### Sickle Head Needle Bearing Installation

Using a flat-ended tool (A) with approximately the same diameter as the bearing, push the bearing in from the bottom of the sickle head until the top of the bearing is flush with the step (B) in sickle head.

Install seal in top of sickle head with lip facing outwards.

**IMPORTANT:** To avoid premature sickle head or wobble box failure, be sure there is no looseness in:
a) Fit of sickle head pin and needle bearing.
b) Fit of sickle head pin and pitman arm.

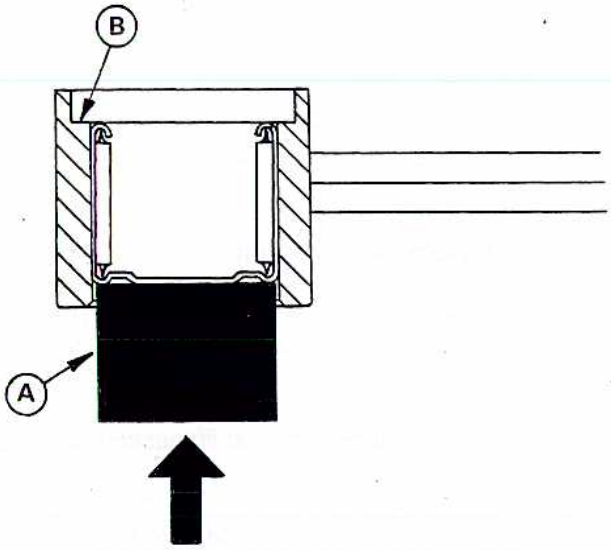

NEEDLE BEARING INSTALLATION

### To Install Sickle

**WARNING: Always stand to rear and grasp rear edge of sickle during installation to reduce risk of injury from cutting edges. Wear heavy gloves when handling sickle.**

**IMPORTANT:** Always align guards and re-set sickle hold-downs while replacing sickle. See "Guards" and "Sickle Hold-Downs" in this section.

1. Slide sickle into place and replace bolt (A).
   **NOTE:** Notch in sickle head pin must align with bolt.

2. Tighten bolt (A) to 160 ft.lbs. (220 N.m)

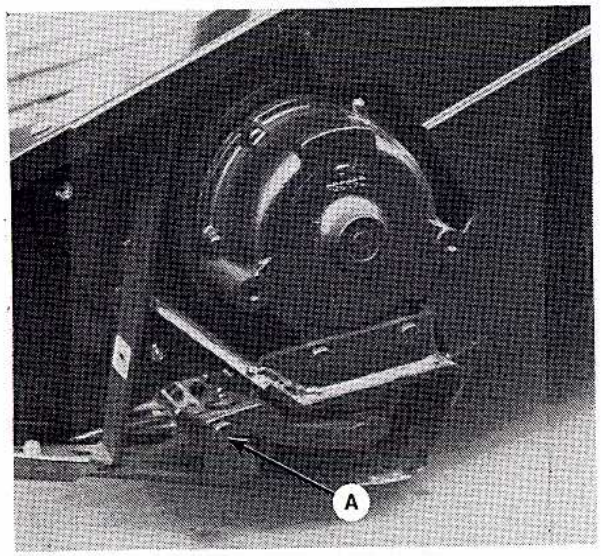

INSTALLING SICKLE

## SICKLE AND SICKLE DRIVE (continued)

### Guards

**CAUTION: Always engage reel props before working under reel.**

Check daily that guards are aligned to obtain proper shear cut between sickle section and guard. Sickle sections should contact shear surface of each guard.

Align guards with guard straightening tool (available from your Dealer Parts Department) as shown:

To bend guard tips up, position tool as shown at (A) and pull up.

To bend tips down, position tool as at (B) and push down.

**TIP:** If trouble is encountered cutting tangled, but easy to cut material (canola, peas, grain) replace guards with stub guards and install a sickle hold-down on every guard. If material is tough to cut, install stub guards with top guard and adjuster plate from the MacDon 930 "Grass Seed Special" Header. See your MacDon dealer.

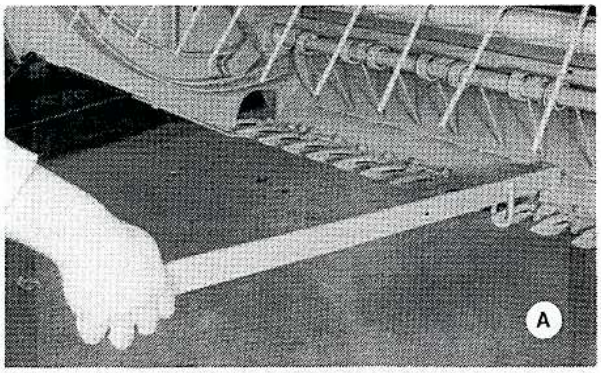


BENDING GUARD TIPS UP

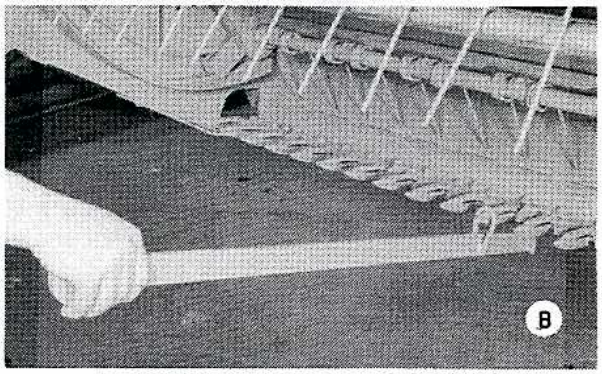


BENDING GUARD TIPS DOWN

### Sickle Hold-Downs

**CAUTION: Always engage reel props before working under reel.**

Check daily that sickle hold-downs are set to prevent sickle sections from lifting off guards but still permit sickle to slide without binding. Set hold-downs after guards are aligned.

To set hold-downs:

1. Using a flat piece of bar (A), tap end of hold-down as shown. This allows adjustment of hold-down arch (B) without "pinching" sickle. Clearance from hold-down to sickle section should be .020 in. (0.5 mm).

2. After adjusting all sickle hold-downs, run header at a low engine speed and listen for noise due to insufficient clearance. Re-adjust as necessary by placing a .020 in. (0.5 mm) shim between hold-down and section, then striking the hold-down arch (B) with a hammer.

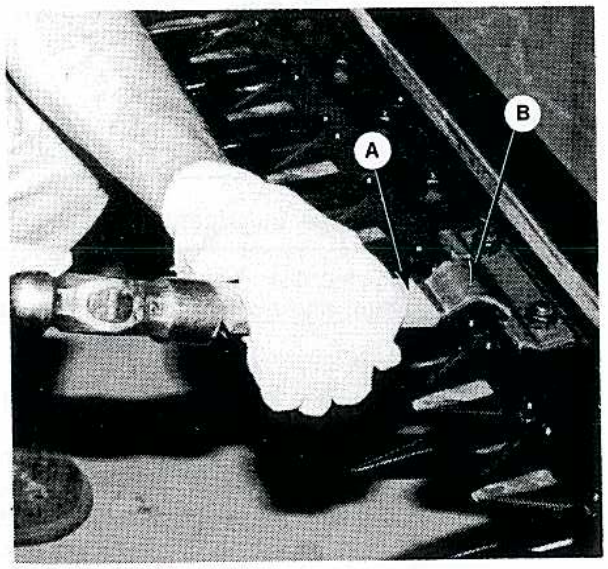


SETTING SICKLE HOLD-DOWNS

## SICKLE AND SICKLE DRIVE (continued)

### Sickle Drive Belt Tension

Check sickle drive belt tension after the first 5 hours operation and every 100 hours thereafter.

**IMPORTANT:** To prolong belt and drive life, do not over-tighten belt. Operate at minimum tension required to prevent slipping or excessive belt whip. When installing a new belt, never pry belt over pulley. Loosen adjusting device sufficiently to allow easy installation.

To adjust:

1. Loosen two nuts (A).
2. Turn adjusting bolt (B) to position pulley (C) so that a force of 18 lbs. (80 N) deflects belt 3/4 inch (20 mm) at mid-span.
3. Tighten nuts (A).
4. Re-adjust tension of a new belt after a short run-in period, (about 5 hours).

**NOTE:** To remove belt, slacken adjusting bolt (B) and remove bolt-on panel in left end sheet at wobble box.

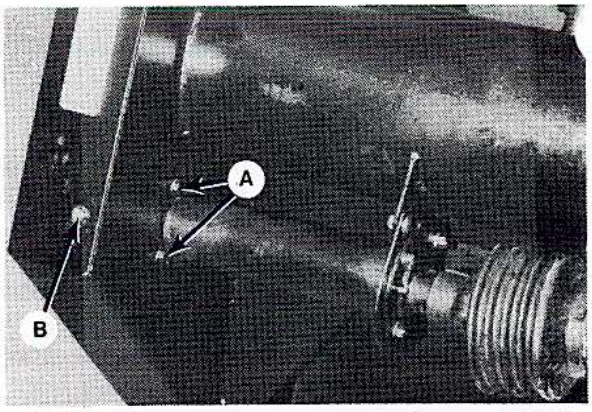


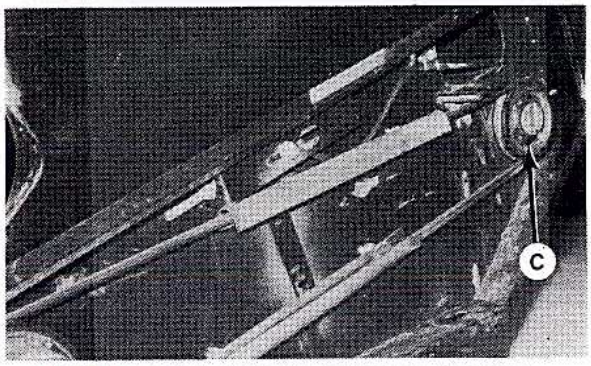


SICKLE DRIVE BELT TENSION ADJUST.

### Wobble Box Mounting Bolts

Tighten four wobble box mounting bolts (B) after the first 10 hours operation and every 100 hours thereafter. Torque should be 200 ft.lbs. (270 N·m). When tightening, start with the side mounting bolts.

If slotted nut (C) securing drive arm is removed, torque to 200 ft.lbs. (270 N·m) when replacing.

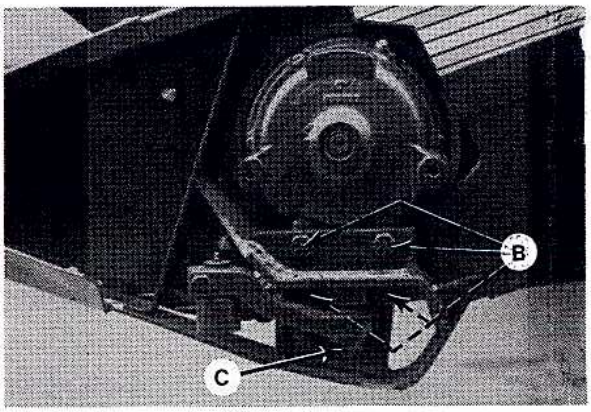


WOBBLE BOX MOUNTING BOLTS

### Wobble Box Lubricant

Check wobble box lubricant level before first operation and every 100 hours thereafter.

To check:

1. Raise header to a point where the wobble box base is approximately level.
2. Remove breather (A) and measure down. Use a somewhat flexible measuring device to allow insertion past internal components. Oil level should be 2.5 to 3.5 inches (65 to 90 mm) from top of hole.
3. Add as required. See "Recommended Lubricants" for specified gear lube and capacity of box.

Change wobble box lubricant after the first 50 hours and every 1000 hours (or 3 years) thereafter.

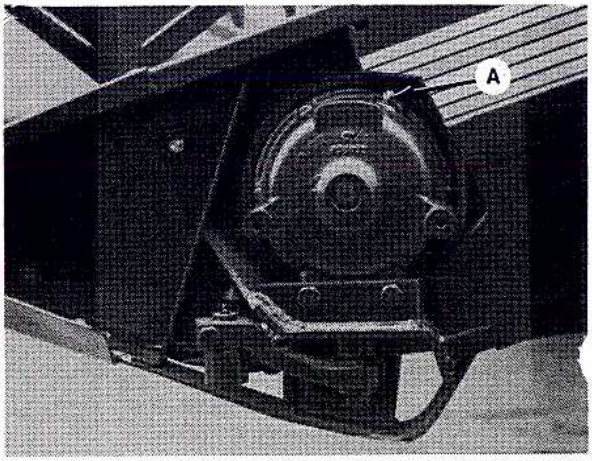


CHECK WOBBLE BOX OIL

## DRAPERS

### Draper Tension Adjustment

Draper tension should be just enough to prevent slipping.

Draper tension is controlled by spring assemblies at each idler roller. Set draper tension as follows:

1. Check that draper guide (A) is properly engaged in grooves of both drive and idler rollers.

**NOTE:** For short deck draper (at extreme right end of Triple Delivery Headers) go to step 4.

2. Loosen locknut (B) and slide bracket (C) away from idler roller as far as hand force allows.
   **NOTE:** It may be necessary to tap bracket (C) with a hammer to start it moving.

3. Tighten locknut (B) to secure the new position.

4. Turn bolt head (D) clockwise until gap (E) between idler spring coils is 1/16 inch (1.5 mm).

**IMPORTANT:** Do not over-tighten draper so that spring is completely collapsed (no gap between coils). Operating with spring collapsed may lead to failure of draper, draper rollers and/or tightener components.

**NOTE:** If draper slips on drive roller with proper tension adjustment, drive roller lagging is available from your dealer.

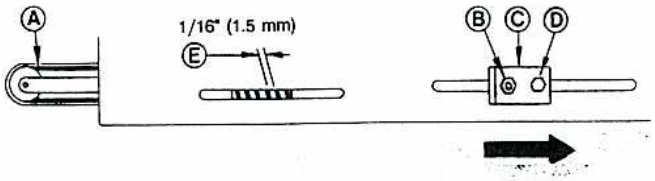


DRAPER TENSION ADJUSTMENT

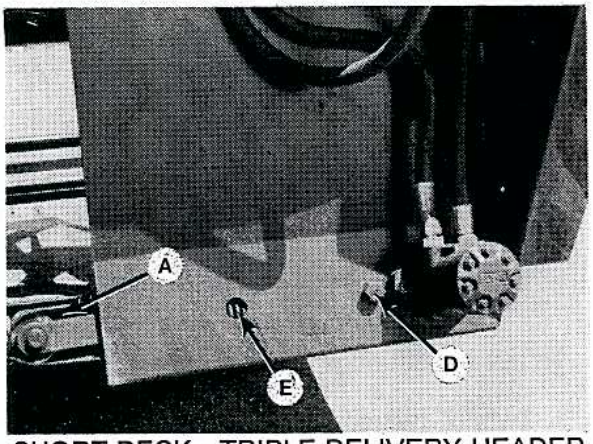


SHORT DECK - TRIPLE DELIVERY HEADER

---

### Replacing Drapers

When installing drapers:

1. Ensure you have the proper length draper.
2. Adjust draper opening. See page 21.
3. Install screws (C) with heads facing center opening.

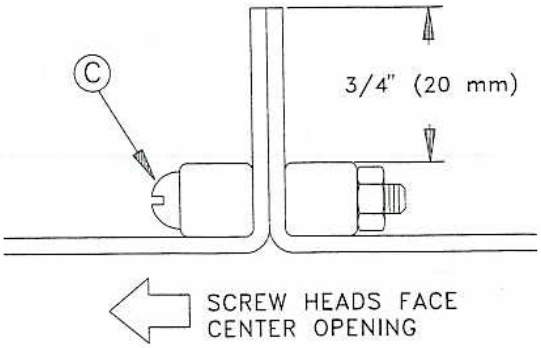


INSTALL DRAPERS CORRECTLY

**DRAPERS (continued)**

**Draper Drive & Idler Rollers**

Replace draper roller bearings every 500 hours or annually.

**NOTE:** When tightening jam nuts at ends of idler roller, torque to 30 - 45 ft.lbs. (40 - 60 N·m). Over-tightening may cause thread to fail.

**NOTE:** At drive roller to motor connection, there is a short "through-bore" setscrew (F) on top of setscrew (G). When removing, be sure to engage Allan wrench only far enough to remove setscrew (F) first, then setscrew (G).

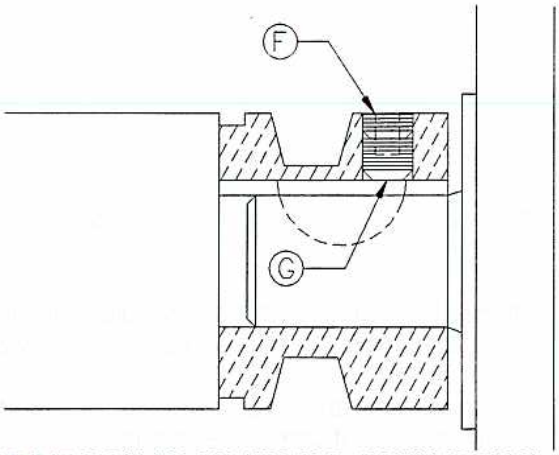


DRIVE ROLLER TO MOTOR CONNECTION

**Installation of Draper Seals:**
**Double Delivery Headers Only**

Front edge draper seals are supplied with the header. These are three long L-shaped pieces bolted to the right rear header panel. Install these seals if:

- Dry material accumulates inside the draper at (A), or between draper and front track (B).
- Wind raises the front edge of the drapers.

**IMPORTANT:** To prevent damage to drapers, do not use front edge draper seals in wet or muddy conditions. In these conditions, material may pack under the seal, causing damage to the front edge of the drapers.

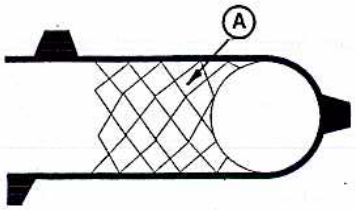


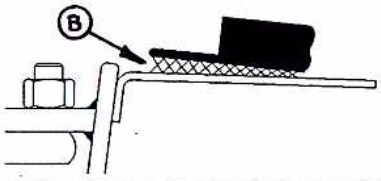


INSTALL DRAPER SEALS TO PREVENT DRY MATERIAL ACCUMULATION

To install front edge draper seals:

1. Two of the draper seals are the same length. Position one of these at each end of the cutterbar, with the remaining seal in the center.
2. Install seals (C) and retainer clips (D) as shown. Locate a clip at both seal joints, with the remaining clips spaced approximately every eighth guard bolt.
   **NOTE:** Clips are already installed to retain the movable left deck. Loosen these to allow installation of draper seal.
3. Push retainer clip against draper seal and tighten hardware to lock in position. Draper seal must not touch draper, but clearance is not to exceed 3/16 inch (4.5 mm).

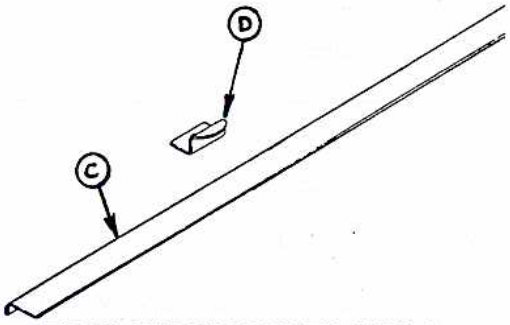


FRONT EDGE DRAPER SEALS AND RETAINER CLIPS

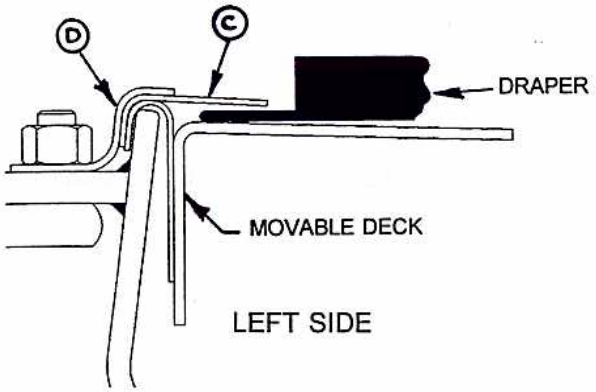


LEFT SIDE

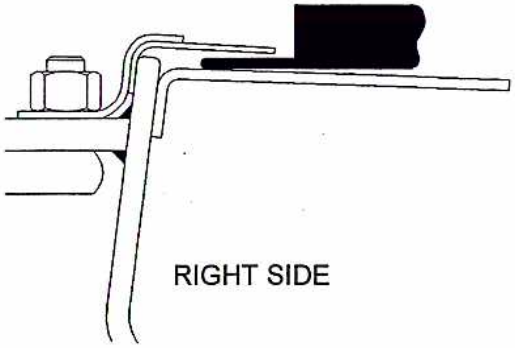

RIGHT SIDE

## REEL AND REEL DRIVE

### Reel Clearance From Cutterbar

The bat reel should be adjusted to provide 2 inches (50 mm) clearance above cutterbar and/or drapers with reel fully lowered. For pick-up reel clearances, see Reel Operator's Manual.

Check reel clearance whenever the reel fore-aft position is changed.

To increase reel clearance from cutterbar:

1. Lower header and reel fully.
2. Turn adjuster nut (C), both sides, clockwise to achieve proper and consistent clearance across cutterbar.

   **NOTE:** For 36' header, in addition to adjusting at each end: At center reel arm, loosen nut (B) and turn nut (D) clockwise. Tighten nut (B) to secure the position.

To decrease reel clearance, turn nuts (C) counter-clockwise and at 36' center arm, loosen nut (D) and turn nut (B) clockwise.

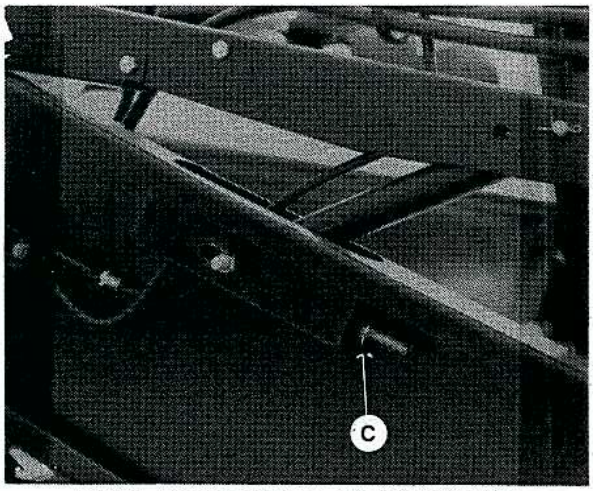


REEL CLEARANCE ADJUSTMENT

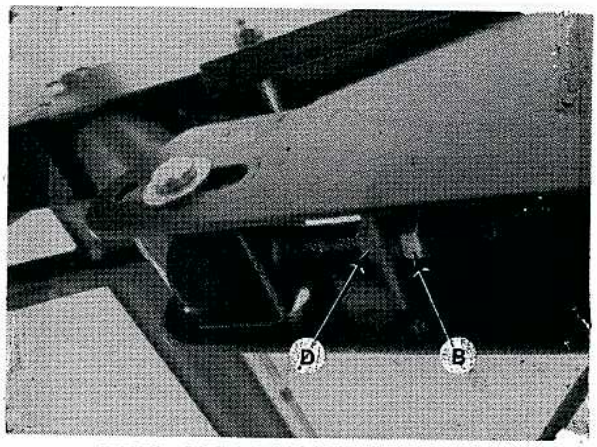


REEL CLEARANCE ADJUSTMENT
36' HEADER - CENTER ARM

---

### Centering the Reel

Center the reel between the header end sheets by adjusting the reel support arm brace (A).

To adjust:

1. Loosen nut (E) at rear of brace..
2. Position brace (A) as required to center reel.
3. Tighten nut (E) to 160 ft.lbs. (215 N·m).

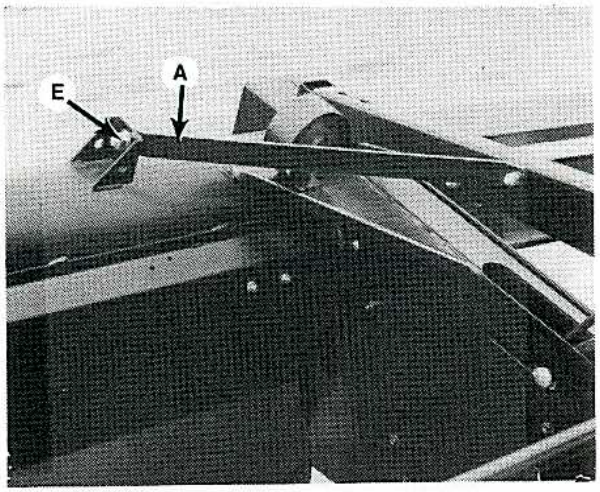


REEL CENTERING ADJUSTMENT

## REEL AND REEL DRIVE (continued)

### Reel Drive Chain Tension

Check the reel drive chain tension annually.

To adjust:
1. Loosen four bolts (A).
2. Slide motor away from reel shaft until a force of 11 lbs. (50 N) deflects chain 1/8 inch (3 mm) at mid-span.
3. Tighten bolts (A).

### Reel Drive Chain Lubrication

Lubricate full length of chain annually with Multi-Purpose Grease.

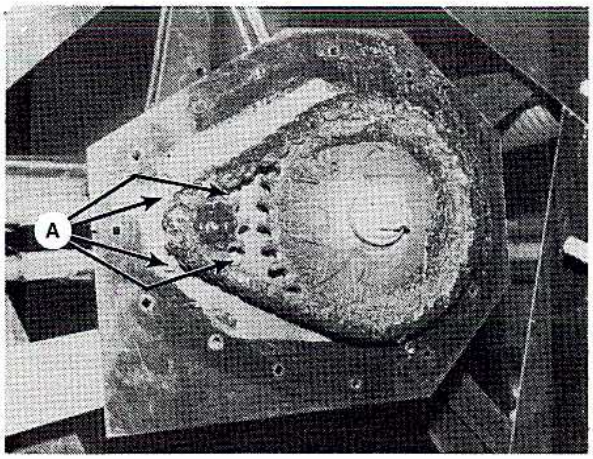


REEL DRIVE CHAIN TENSION AND LUBRICATION

---

## GAUGE WHEELS - 36 FT. STANDARD, 30 FT OPTION

### Wheel Bolts

Check and tighten wheel bolts after the first 10 hours of operation and every 100 hours thereafter.

Whenever a wheel is removed and re-installed, check torque after one hour of operation.

Maintain torque as follows:
4-Bolt Hub: 50 to 60 ft.lbs. (70 to 80 N·m)
6-Bolt Hub: 80 to 90 ft.lbs. (110 to 120 N·m)

Follow the proper bolt tightening sequence shown.

**NOTE:** When installing wheel, be sure valve stem (A) points away from wheel support.

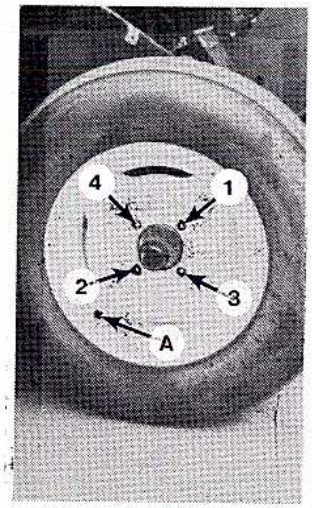


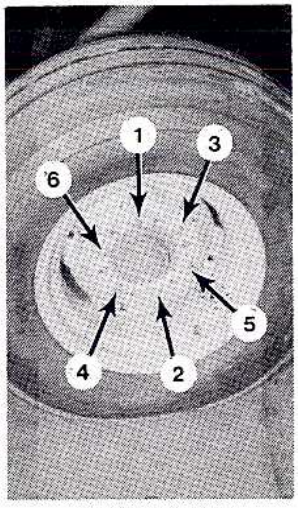


4-BOLT HUB 6-BOLT HUB
GAUGE WHEELS

### Gauge Wheel / Transport Casters

Lower casters from both L/H and R/H supports every 500 hours and apply a light coating of Multi-Purpose Grease to the section of caster which engages the support.

**NOTE** - Headers with Gauge Wheel/Transport Option:
To service left wheel in transport position:
- Block the two rear tires.
- Position jack under mid-point of left end sheet.
- Use a 2 to 3 foot long (60 to 90 cm) piece of wood between jack and end sheet to distribute lifting force and to prevent damage to shield.

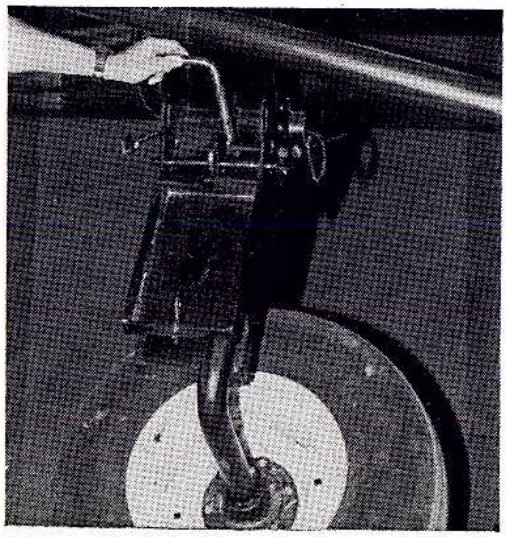

GAUGE WHEEL / TRANSPORT CASTERS

GAUGE WHEELS (continued)

Tire Inflation

Check tire pressure daily. Maintain pressures recommended in Specifications section.

**WARNING: Service tires safely. A tire can explode during inflation and cause serious injury or death. Never increase air pressure beyond 35 psi (241 kPa) to seat the bead on the rim. Replace the tire if it has a defect. Replace a wheel rim which has cracks, wear or severe rust. Never weld a wheel rim. Make sure all the air is removed from a tire before removing the tire from a rim. Never use force on an inflated or partially inflated tire. Make sure the tire is correctly seated before inflating to operating pressure.**

**Do not remove, install or make repairs to a tire on a rim unless you have the proper equipment and experience to perform the job. Take the tire and rim to a qualified tire repair shop. If the tire is not in correct position on the rim, or is too full of air, the tire bead can loosen on one side, causing air to leak at high speed and with great force. An air leak of this nature can thrust the tire in any direction, endangering anyone in the area.**

(A) - Use a safety cage if available.

(B) - Do not stand over tire. Use a clip-on chuck and extension hose.

SERVICE TIRES SAFELY

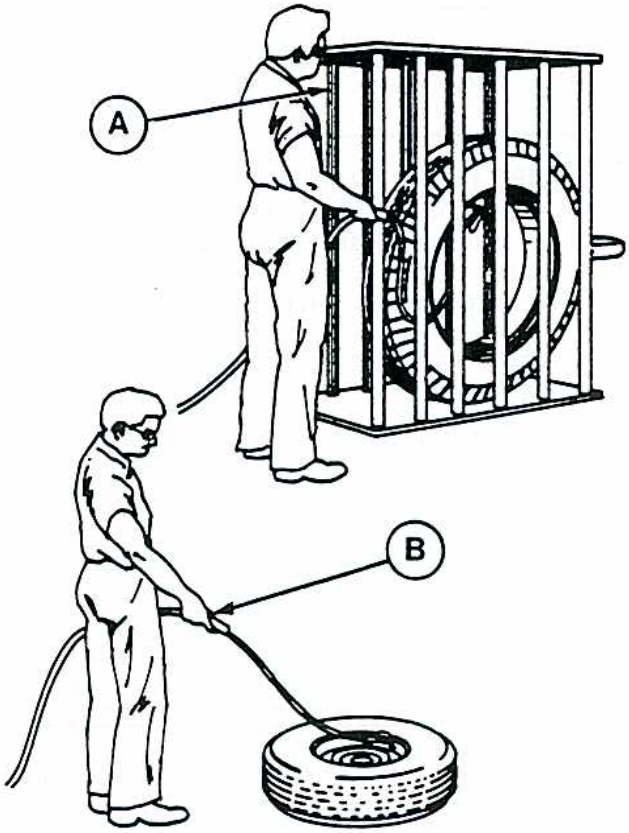

# MAINTENANCE/SERVICE

## MAINTENANCE SCHEDULE

The following maintenance schedule is a listing of periodic maintenance procedures, organized by service intervals. For detailed instruction, see the specific headings in Maintenance/Service section. Use "Recommended Lubricants" as specified under that heading.

## SERVICE INTERVALS

The recommended service intervals are in hours of operation. Use the hour meter in the windrower or combine cab to indicate when the next service interval has been reached.

**IMPORTANT:** Recommended intervals are for average conditions. Service header more often if operated under adverse conditions (severe dust, extra heavy loads, etc.)
Regular maintenance is the best insurance against early wear and untimely breakdowns. Following this schedule will increase machine life.
Where a service interval is given in more than one time frame, eg. "100 Hours or Annually", service the header at whichever interval is reached first.

**CAUTION: Carefully follow safety messages given under "Service Procedures".**

AT FIRST USE: See "Break-In Period" in Operation section.

---

## 5 HOURS OR DAILY

1. Grease sickle head.

---

## 10 HOURS OR DAILY

1. Grease secondary driveline.
2. Check hydraulic hoses, lines and components for leaks.
3. Oil sickle (except in sandy conditions).
4. Check sickle sections, guards and hold-downs
5. Check tire pressure. (headers with gauge wheels)

---

## 50 HOURS

1. Grease reel support bushing(s).

---

## 100 HOURS OR ANNUALLY *

1. Grease sickle drive shaft support bearings.
2. Check sickle drive belt tension.
3. Check wobble box mounting bolts.
4. Check wobble box lubricant level.
5. Check reel drive chain tension.
6. Grease reel drive chain.
7. Check wheel bolt torques (headers with gauge wheels)
8. Grease wheel pivot bushings.

---

END OF SEASON: See "Storage Procedure" in Operation section.

---

## 500 HOURS OR ANNUALLY *

1. Grease wheel hub bearings (headers with gauge wheels).
2. Grease gauge wheel transport casters (headers with transport option).
3. Replace draper drive roller bearings.

---

## 1000 HOURS OR 3 YEARS

1. Change wobble box lubricant.

* It is recommended that Annual Maintenance be done prior to start of operating season.

# MAINTENANCE RECORD

Header Serial No. _____

Combine this record with Windrower or Combine Maintenance Record for "complete unit" service. See Maintenance/Service section for details on each procedure. Copy this page to continue record.

**(G) - Units with gauge wheels or transport option**
**(T) - Units with transport option only**

| ACTION: | ✔ - Check | ● - Lubricate | ▲ - Change | | | | | | | | | | | | | | | | |
|---|---|---|---|---|---|---|---|---|---|---|---|---|---|---|---|---|---|---|---|
| | **Hour Meter Reading /** | | | | | | | | | | | | | | | | | | |
| | **Maintenance Procedure** / **Serviced By:** | | | | | | | | | | | | | | | | | | |
| | BREAK-IN | See "Break-In Period" in Operation section for checklist. | | | | | | | | | | | | | | | | | |
| | **5 HOURS OR DAILY** | | | | | | | | | | | | | | | | | | |
| ● | Sickle Head | | | | | | | | | | | | | | | | | | |
| | **10 HOURS or DAILY** | | | | | | | | | | | | | | | | | | |
| ● | Secondary Driveline | | | | | | | | | | | | | | | | | | |
| ✔ | Sections, Guards, Hold-downs | | | | | | | | | | | | | | | | | | |
| ● | Sickle Assembly | | | | | | | | | | | | | | | | | | |
| ✔ | Hydraulic Hoses and Lines | | | | | | | | | | | | | | | | | | |
| ✔ | Tire Pressure (G) | | | | | | | | | | | | | | | | | | |
| | **50 HOURS** | | | | | | | | | | | | | | | | | | |
| ● | Reel Support Bushing(s) | | | | | | | | | | | | | | | | | | |
| | **100 HOURS OR ANNUALLY** | | | | | | | | | | | | | | | | | | |
| ● | Sickle Drive Shaft Bearings | | | | | | | | | | | | | | | | | | |
| ● | Reel Drive Chain | | | | | | | | | | | | | | | | | | |
| ✔ | Sickle Drive Belt Tension | | | | | | | | | | | | | | | | | | |
| ✔ | Wobble Box Bolt Torque | | | | | | | | | | | | | | | | | | |
| ✔ | Wobble Box Lube Level | | | | | | | | | | | | | | | | | | |
| ✔ | Reel Drive Chain Tension | | | | | | | | | | | | | | | | | | |
| ✔ | Wheel Bolt Torques (G) | | | | | | | | | | | | | | | | | | |
| ● | Wheel Pivot Bushings (G) | | | | | | | | | | | | | | | | | | |
| | **500 HOURS OR ANNUALLY** | | | | | | | | | | | | | | | | | | |
| ● | Wheel Hub Bearings (G) | | | | | | | | | | | | | | | | | | |
| ● | Transport Casters (T) | | | | | | | | | | | | | | | | | | |
| ▲ | Draper Roller Bearings | | | | | | | | | | | | | | | | | | |
| | **1000 HOURS OR 3 YEARS** | | | | | | | | | | | | | | | | | | |
| ▲ | Wobble Box Lubricant | | | | | | | | | | | | | | | | | | |

# TROUBLESHOOTING

| SYMPTOM | PROBLEM | SOLUTION | REF. |
|---|---|---|---|
| **CROP LOSS AT CUTTERBAR** | | | |
| Heads shattering or breaking off. | Reel speed too fast. | Reduce reel speed. | 24 |
| | Ground speed too fast. | Reduce ground speed. | 17 |
| | Crop too ripe. | Operate at night when humidity is higher. | --- |
| Cut grain falling ahead of cutterbar. | Reel too high. | Lower reel. | 24 |
| | Cutterbar too high. | Lower cutterbar. | 18 |
| Does not pick-up down crop. | Cutterbar too high. | Lower cutterbar. | 18 |
| | Reel too high. | Lower reel. | 24 |
| | Reel too far back. | Move reel forward on support arms. | 24 |
| | Ground speed too fast for reel speed. | Reduce ground speed or increase reel speed. | 17<br>24 |
| | Bat reel unsuitable for conditions. | Install pick-up reel. | 59 |
| Crop left at dividers. | Divider not gathering crop. | Change divider angle. | 25 |
| Strips of uncut material. | Crowding uncut crop. | Allow enough room for crop to be fed to cutterbar. | --- |
| Excessive bouncing at normal field speed. | Float set too light. | Adjust float. | 20 |
| Crop build-up at reel lift cylinders. | High crop, like canola, carrying over divider rods. | Cut top bend off divider rods, place plastic tubes over rods to extend height. | --- |
| 30' Header with Bat Reel: Cannot lower header fully to close cut. | Gauge wheel springs over-riding float setting. | Remove one spring at each gauge wheel support. (Move remaining spring to center notch on clevis.) | 62 |
| **CUTTING COMPONENTS** | | | |
| Excessive breakage of sickle sections or guards. | Header angle too steep in stony field conditions. | Flatten header angle or raise header height. | 20<br>18 |
| | Float set too heavy. | Adjust float. | 20 |
| | Bent or broken guard. | Straighten or replace. | 45 |

# TROUBLESHOOTING

| SYMPTOM | PROBLEM | SOLUTION | REF. |
|---|---|---|---|
| **CUTTING COMPONENTS (continued)** | | | |
| Sickle back breakage. | Bent or broken guard. | Straighten or replace. | 45 |
| | Worn sickle head pin. | Replace. | 43 |
| | Dull sickle. | Replace. | 43 |
| | Pitman arm loose at wobble box. | Tighten or replace. | 43 |
| Ragged and uneven cutting of crop. | Ground speed too fast. | Reduce ground speed. | 17 |
| | Cutting edge of guards not close enough or parallel to sickle sections. | Adjust guards | 45 |
| | Sickle hold-downs not adjusted to permit sickle to work freely. | Adjust hold-downs so sickle will work freely, but still keep sickle sections from lifting off guards. | 45 |
| | Cutterbar components such as sickle sections, guards are worn, damaged, or broken. | Check and replace all worn and broken cutting components to obtain even cutting of crop. | 43 |
| | Cutterbar plugged with material. | Adjust reel to sweep material off cutterbar. | 24 |
| | Sickle is not operating at recommended speed. | Check engine speed of windrower or combine. | * |
| | Bent sickle, causing binding of cutting parts. | Straighten a bent sickle. Check guard alignment and align as necessary for a smooth cut. | 43<br>45 |
| | Top of guard out of adjustment or bent, causing poor shearing action. | Adjust tops of guards so they are parallel to shear edge of guards. | 45 |
| | Reel speed too slow. | Increase reel speed. | 24 |
| | Loose sickle drive belt. | Adjust belt tension. | 46 |
| Excessive vibration of cutting parts. | Sickle is not operating at recommended speed. | Check engine speed of windrower or combine. | * |
| | Excessive looseness of cutting parts and sickle drive. | Remove excessive play from cutterbar and drive to eliminate vibration. Then make proper adjustments. | 43 |

* See Windrower or Combine Operator's Manual.

| SYMPTOM | PROBLEM | SOLUTION | REF. |
|---|---|---|---|
| **CUTTING COMPONENTS (continued)** | | | |
| Sickle plugging. | Loose sickle drive belt. | Adjust belt tension. | 46 |
| | Dull or broken sickle sections. | Replace. | 43 |
| | Bent or broken guards. | Align or replace. | 45 |
| | Improper sickle hold-down adjustment. | Adjust hold-down. | 45 |
| | Improper reel adjustment. | Adjust to sweep material off cutterbar. | 24 |
| | Improper header float adjustment. | Adjust float springs. | 20 |
| | Header angle too steep. | Flatten header angle. | 20 |
| | Mud or dirt build-up on cutterbar. | Raise cutterbar. | 18 |
| **REEL** | | | |
| Reel will not lift. | Reel lift quick couplers not compatible. | Change quick coupler. | --- |
| Reel seems to lack power (jerky rotation). | Reel speed too fast. | Reduce reel speed. | 24 |
| | Reel too low. | Raise reel. | 24 |
| | Relief valve on combine or windrower (not on adapter) has incorrect relief setting. | Adjust relief to 2000 psi | * |
| | Reel too far ahead of sickle. | Move reel back on support arms. | 24 |
| | Low oil reservoir level on combine or windrower. (NOTE: Sometimes more than one reservoir.) | Fill to proper level. | * |
| Reel wrapping in tangled and weedy crops causing improper reel delivery. | Incorrect location and height of reel. | Place reel well ahead and down. | 24 |
| | Reel speed too fast. | Reduce speed of reel to allow weedy crops to fall onto drapers. | 24 |

* See Windrower or Combine Operator's Manual

# TROUBLESHOOTING

| SYMPTOM | PROBLEM | SOLUTION | REF. |
|---|---|---|---|
| **REEL (continued)** | | | |
| Reel carrying crop over causing improper reel delivery. | Tall grain or nodding varieties of crops catch on reel bats and arms. | Add a second reel bat to each to increase width. (Reel arms have extra holes.) | --- |
| | Reel speed too fast. | Reduce speed of reel so crop will not carry over top of reel. Reel should turn just enough faster than ground speed so that crop heads are laid well back on drapers. | 24 |
| | Reel height too low. | Raise reel so bat contacts higher on plant. | 24 |
| **DRAPERS** | | | |
| Draper will not drive, and/or TD decks will not shift. | Drapers are loose. | Tighten drapers. | 47 |
| | Drive or idler roller wrapped with material. | Loosen draper and clean rollers. | 47 |
| | Slat or connector bar jammed by frame or material. | Loosen draper and clear obstruction. | 47 |
| | Insufficient clearance between decks. | Adjust deck stops. | 22,23 |
| | Roller bearing seized. | Replace. | 38 |
| | Low hydraulic oil. | Fill reservoir to full level. | * |
| | Incorrect relief setting at flow control valve. | Adjust relief setting. | * |
| Draper stalling. | Material not feeding evenly off sickle. | Lower reel. | 24 |
| | | Install stub guards. | * * |
| Dry material accumulates inside or under front edge of draper (DD Header). | Front edge draper seals not installed. | Install draper seals. | 48 |
| Front edge of draper being damaged (DD Header). | In wet/muddy conditions, material packs under draper seals. | Remove front edge draper seals. | 48 |

* See Windrower or Combine Adapter Operator's Manual.
* * See your MacDon dealer.

# TROUBLESHOOTING

| SYMPTOM | PROBLEM | SOLUTION | REF. |
|---|---|---|---|
| **WINDROW FORMATION** | | | |
| Heads on ground (flowered out). | Draper speed too slow. | Increase draper speed. | 20 |
| | Draper angle too flat. | Increase draper angle. | 20 |
| | Ground speed too slow. | Increase ground speed. | 17 |
| | Crop too ripe. | Cut material before too mature. | --- |
| Hollow in center. | Draper speed too slow. | Increase draper speed. | 20 |
| | Delivery opening too wide. | Decrease delivery opening width. | 21 |
| Heads in center (too much herringbone). | Draper speed too fast. | Reduce draper speed. | 20 |
| | Ground speed too fast. | Reduce ground speed. | 17 |
| | Crop too green. | Allow to mature. | --- |
| Uneven windrow. | Ground speed too fast for drapers. | Reduce ground speed or increase draper speed. | 17<br>20 |
| | Reel too low. | Raise reel. | 24 |
| | Reel too fast. | Reduce reel speed. | 24 |
| | Draper angle too steep. | Decrease draper angle. | 20 |
| | Material not feeding evenly off of sickle. | Lower reel | 24 |
| | | Install stub guards. | * * |

* See Windrower or Combine Adapter Operator's Manual.
* * See your MacDon dealer.

# OPTIONS AND ATTACHMENTS

Consult your Windrower dealer for details on the following options and attachments.

## PICK-UP REEL

Available for all header sizes, the cam-action pick-up reel is ideal for downed-crop conditions.

Available with replaceable plastic or steel fingers.

A separate Operator's Manual is provided with the pick-up Reel.

Adjust reel clearance after installing pick-up reel. See "Reel Clearance From Cutterbar" in Maintenance/ Service section.

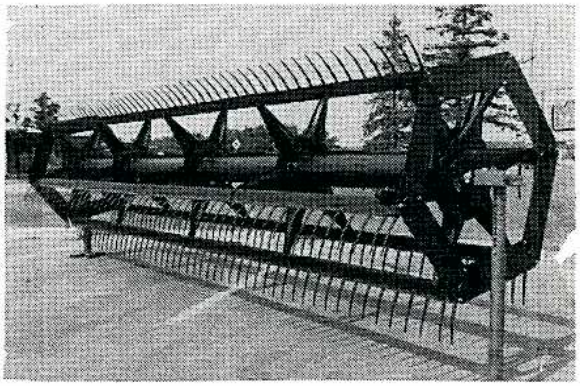

PICK-UP REEL

## GAUGE WHEELS

36 foot headers will be equipped with either the standard gauge wheel package, or the Transport Option described below. Both are available as options for the 30 foot header, but cannot be installed on smaller headers.

Gauge wheels improve end-to-end float, allowing larger headers to better follow ground contours.

**NOTE:** When field installing gauge wheels, raise header to ease installation of spring at front end. Be sure header is blocked or cylinder stops are installed.

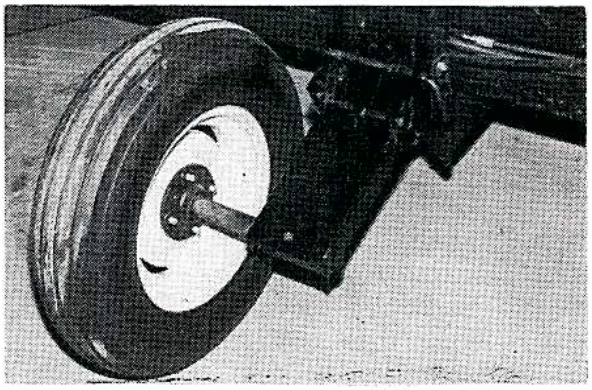

GAUGE WHEELS
30 & 36 FT.

## GAUGE WHEEL / TRANSPORT OPTION

Available for 36 and 30 foot headers as an alternative to the standard gauge wheel package above. This option allows pivoting the gauge wheels 90° to allow towing the header from the left end.

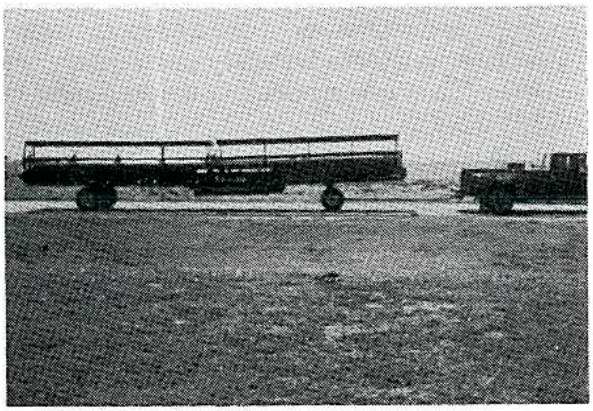

GAUGE WHEEL / TRANSPORT OPTION
30 & 36 FT.

## HEAVY DUTY DRAPER DRIVE KIT

This kit replaces draper idler roller with a drive roller. It is recommended for conditions where crop volume causes drapers to stall, for example, heavy canola.
**IMPORTANT:** Run draper looser than normal when operating with two drive motors.

# OPTIONS AND ATTACHMENTS

## SKID SHOES

Skid shoes are available as an attachment. The primary benefits of skid shoes are:

1. Help prevent damage to cutting components.
2. Reduce scooping of dirt onto cutterbar.
3. Provide a method of setting a minimum cutting height.

See "Skid Shoes" in Operation section for adjustment details.

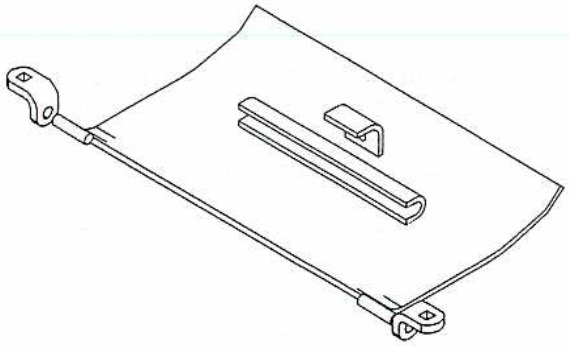

SKID SHOES

## HEADER LIFTING ARM

Installation of this kit allows single point lifting of the header from field position. Useful for loading/ unloading in mobile custom harvest operations. Installation instructions are included with the kit.

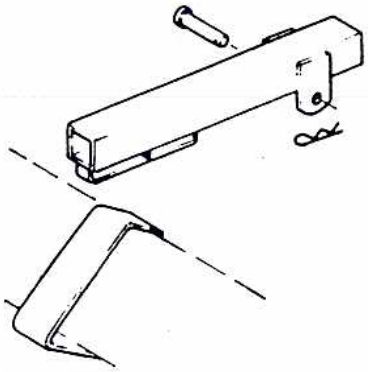

HEADER LIFTING ARM

## HYDRAULIC FORE-AFT REEL POSITIONER

Installation of this kit allows in-cab adjustment of reel fore-aft position. This feature shortens header preparation time for truck transport, often used in mobile custom harvest operations. Installation instructions are provided in the Assembly section of this manual.

## REEL ARM SLOPE ENHANCEMENT KIT

Especially recommended for "Rice Special" Headers, this kit raises the rear of the reel support arms for more efficient operation of the pick-up reel with the hydraulic fore-aft reel positioner.

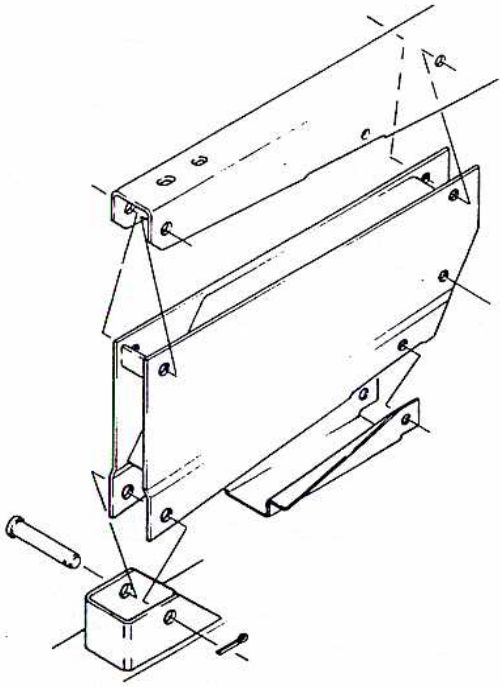

REEL ARM SLOPE ENHANCEMENT KIT

## PREPARE TO UNLOAD

**CAUTION: To avoid injury to bystanders from being struck by machinery, do not allow persons to stand in unloading area.**

1. Move trailer into position and block trailer wheels.

2. Lower trailer storage stands.

3. Check that the load has not shifted or otherwise become unstable and check shipping stands for damage before removing hauler's tie-downs. If it appears load is unstable, take precautions to prevent machines falling down when tie-downs are removed.

## UNLOADING EQUIPMENT

**CAUTION: Unloading equipment must meet or exceed specified requirements. Using inadequate equipment may result in vehicle tipping, chain breakage, or machine damage.**

## LIFTING VEHICLE REQUIREMENTS

Use a lifting vehicle with minimum 4000 lb. (1815 kg) lifting capacity and a minimum 15 ft. (4.5 m) lifting height.

## CHAIN REQUIREMENTS

Use overhead lifting quality chain (1/2 in.) with minimum 5000 lb. (2270 kg) working load limit. Chain length must be sufficient to provide minimum 4 ft. (1.2 m) vertical chain height.

## UNLOAD HEADER

1. Attach chain hooks at points (A) and (B) marked "Lift Here".

**CAUTION: To avoid injury from shifting or falling machines, remove hauler's tie-downs from one header at a time, after it is secured to unloading vehicle.**

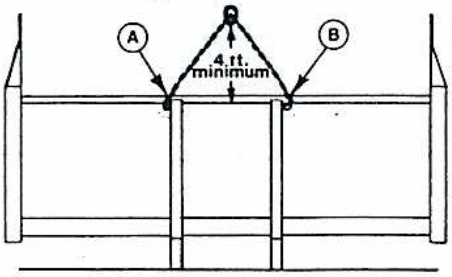


ATTACH CHAIN HOOKS

2. Remove hauler's tie-down straps and chains.

**CAUTION: Be sure hooks are secure before moving away from load. Stand clear when lifting, machine may swing. Do not alow anyone to walk under or near the header as it is unloaded or moved.**

3. Raise header 12 inches (300 mm) and remove from trailer.
4. Take to storage or set-up area.
5. Set header down securely on level ground. Check for shipping stand damage and remove dividers and other attachments wired to underside of header.
6. Remove chain hooks.

**WARNING: Header shipping stands are designed for shipping economy. They do not provide a base broad enough for storage of units in an upright position.**

**To avoid personal injury, death or machine damage from headers falling or blowing over, proceed with instructions to "Lower Header" (next page) before leaving units in storage.**

**If it is necessary to store machines upright on shipping stands, ensure that the ground is firm and level. Take factors such as exposure to wind, and the effects of snow melt and ground thaw into consideration. Tie units together and brace on both sides, or place against a secure backstop and brace the unsupported side.**

## LOWER HEADER

**NOTE:** For 36' and 30' headers with gauge wheels or gauge wheel/transport package, attach gauge wheel springs to header outer legs before lowering header to ground.

To install springs:

- Attach two springs to clevis (D) (from gauge wheel package). This will later be attached to spring plate in gauge wheel support.
- Position opposite end of springs inside header leg and install pin (E) and cotter pins.
- Repeat at other leg.
- Take care that springs are not damaged as header is lowered.

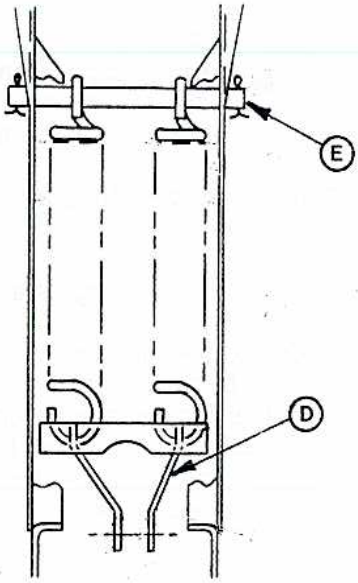


ATTACH GAUGE WHEEL SPRINGS TO HEADER LEGS - 36 FT. (30 FT. OPTION)

1. Drive lifting vehicle to approach header from its "underside".

   Attach chain hooks to points (A) and (B) marked "Lift Here".

   See "Chain Requirements" in this section for minimum chain specifications.

2. Raise lifting apparatus to take some of the weight off shipping stands and back up SLOWLY to lower header.

   **CAUTION: Stand clear when lowering, as machine may swing.**

3. Place 6" (150 mm) blocks (C) under each end of cutterbar.

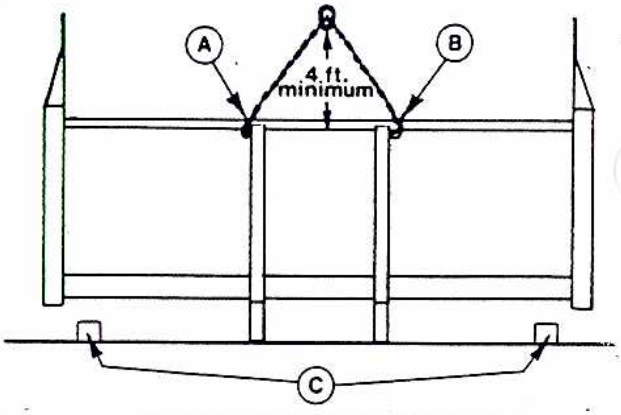


ATTACH CHAIN HOOKS AND PLACE BLOCKS UNDER CUTTERBAR

## LOWER HEADER STAND - 21, 25 and 30 ft.

1. Remove chain hooks and move lifting vehicle to rear of header.

2. Attach chain to center link anchor on frame tube, raise rear of header and lower header stand into position (A).

3. Lower header onto stand and 6" (150 mm) blocks under cutterbar. Remove shipping stands.

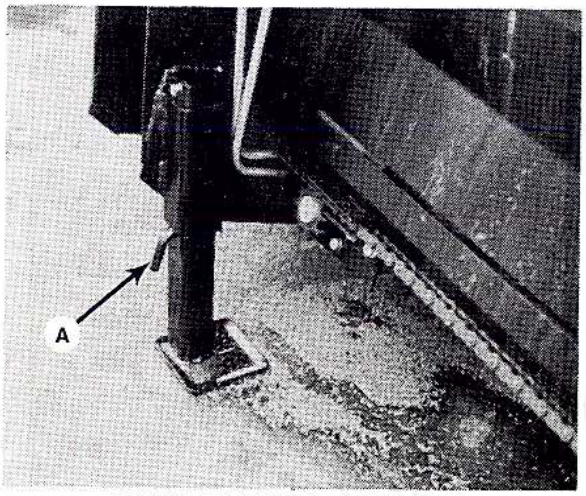


HEADER STAND - LOWERED

## INSTALL GAUGE WHEELS - 36 ft. (30 ft. OPTION)

**NOTE:** These instructions apply to the standard gauge wheel package. For instructions for installing the gauge wheel/transport option, see next page.

1. Remove chain hooks and move lifting vehicle to rear of header. Attach chain to center link anchor on frame tube and raise rear of header.

2. Front end of gauge wheel spring assembly was attached to header outer legs before header was lowered (see previous page). Attach clevis at other end of springs to plate (C) at wheel supports, using 5/8 hex head bolt and lock nut.
   **NOTE:** Do not collapse clevis by over-tightening hardware. Clevis must be free to rotate.

3. Ensure plastic bushings (D) are installed (2 per support). Position wheel support assembly in header leg and install tube (E) from outside header leg through wheel support. Attach two brackets (F) with 1/2 x 1 ¼ inch bolts and nuts to the brackets welded to header leg.
   **IMPORTANT:** Tighten to 80 ft. lbs. (110 N·m). Be sure that welded tab (G) on tube (E) is engaged in slot in bracket (F) on one side. Repeat at other gauge wheel support.

4. Attach gauge wheels to hubs. Torque wheel bolts to 50 to 60 ft.lbs. (70 to 80 N·m).

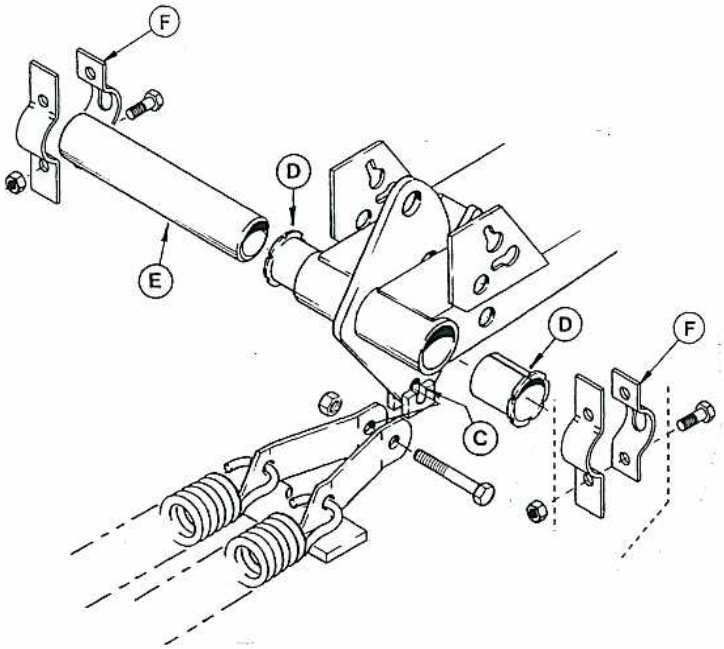


INSTALL GAUGE WHEEL SUPPORTS

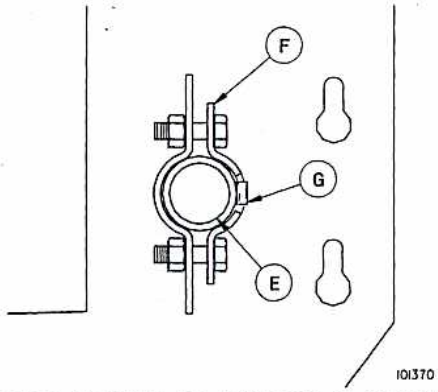


ENGAGE TAB IN BRACKET SLOT

5. Remove pins securing wheel assemblies and lower to stand position. Secure with pins at (A).

6. Lower header onto gauge wheels and 6" (150 mm) blocks under cutterbar. Remove shipping stands.

7. Check tire pressure. Inflate to 24 to 28 psi (165 to 195 kPa).

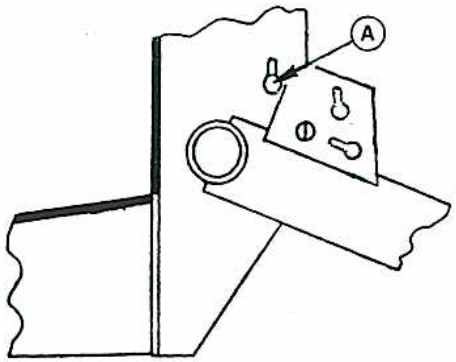


GAUGE WHEELS - STAND POSITION

## INSTALL GAUGE WHEEL / TRANSPORT OPTION
**30 & 36 FT.**

**NOTE:** These instructions apply to the gauge wheels with transport option. For instructions for installing the standard gauge wheel package, see previous page.

1. Remove chain hooks and move lifting vehicle to rear of header. Attach chain to center link anchor on frame tube and raise rear of header.

2. Identify right and left wheel supports: Left wheel support has single wheel caster, right wheel support is attached to dual wheel beam.

3. Front end of gauge wheel spring assembly was attached to header outer legs before header was lowered (see page 62). Attach clevis at other end of springs to plate (C) at left and right wheel supports, using 5/8 hex head bolt and lock nut.

**NOTE:** Do not collapse clevis by over-tightening hardware. Clevis must be free to rotate.

**NOTE:** For ease of installing right wheel support, remove 1/2 inch bolt (H, next page) securing pivot shaft, allowing removal of dual wheel beam.

4. Ensure plastic bushings (D) are installed (2 per support). Position wheel support assembly in header leg and install tube (E) from outside header leg through wheel support. Attach two brackets (F) with 1/2 x 1 ¼ inch bolts and nuts to the brackets welded to header leg.
   **IMPORTANT:** Tighten to 80 ft. lbs. (110 N·m). Be sure that welded tab (G) on tube (E) is engaged in slot in bracket (F) on one side. Repeat at other gauge wheel support.

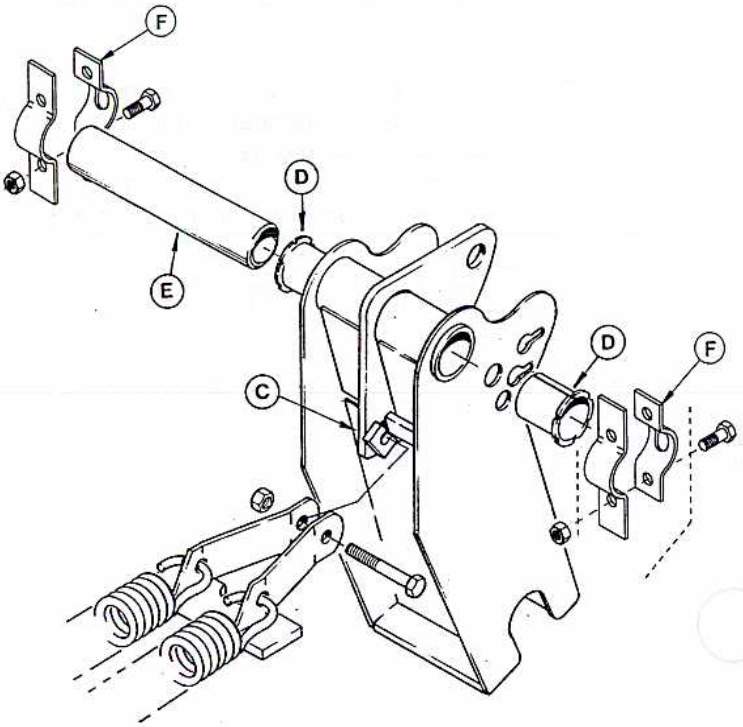


INSTALL WHEEL SUPPORTS (L/H SHOWN)

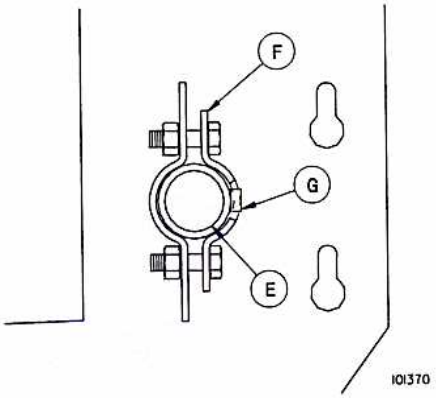


ENGAGE TAB IN BRACKET SLOT

## INSTALL GAUGE WHEEL / TRANSPORT OPTION
**30 & 36 FT. (continued)**

5. Install 1/2 inch hex head bolt (H) and locknut (removed above), attaching dual wheel beam to right wheel support in field position.
   **NOTE:** The pivot shaft on the wheel beam can be installed at right side (A) or left side (B) of wheel support. This allows field positioning of the beam either "inboard" (towards center of header) or "outboard" (towards end of header), as desired. See chart for recommended position depending on power unit.

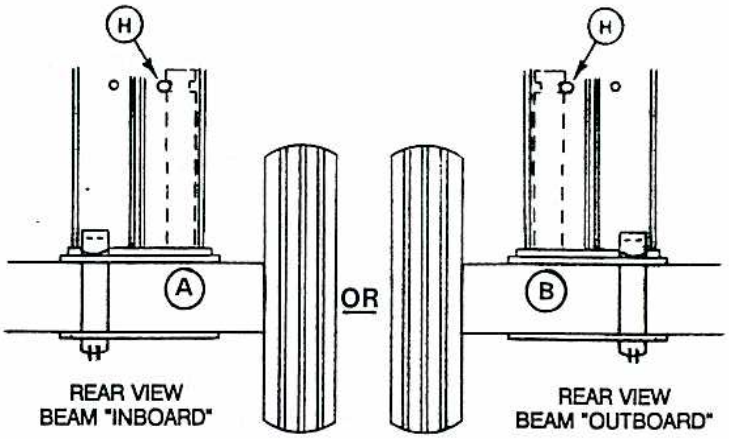

ATTACH RIGHT WHEEL BEAM

| HEADER | POWER UNIT | | | | | | | |
|---|---|---|---|---|---|---|---|---|
| | 9000/4900/2900 WINDROWER | | 9030 TRACTOR: CENTER MOUNT ADAPTER | | 9030 TRACTOR: OFFSET MOUNT ADAPTER | | COMBINE | |
| | PIVOT SHAFT POSITION | BEAM IN FIELD POSITION | PIVOT SHAFT POSITION | BEAM IN FIELD POSITION | PIVOT SHAFT POSITION | BEAM IN FIELD POSITION | PIVOT SHAFT POSITION | BEAM IN FIELD POSITION |
| 30' TD | A | OUT | B | OUT | A | OUT | B | OUT |
| 30' DD | B | OUT | A | IN | A | IN | A | IN |
| 36' DD | B or A | OUT or IN | B or A | OUT or IN | B or A | OUT or IN | B or A | OUT or IN |

6. Install brace anchor (G) under cutterbar at the 9th guard bolt from center of R/H header leg, replacing standard bolt with 1-3/4" long.
   **NOTE:** If a sickle hold-down or deck support is installed at 9th bolt, relocate hold-down or support to an adjacent location.

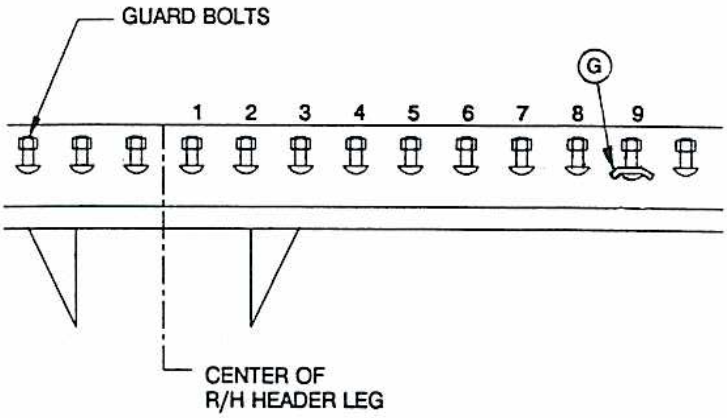

INSTALL BRACE ANCHOR AT CUTTERBAR

INSTALL GAUGE WHEEL / TRANSPORT OPTION
30 & 36 FT. (continued)

7. Attach the three gauge wheels to hubs. Torque wheel bolts to 80 to 90 ft.lbs. (110 to 120 N·m).

8. Install pins (B) in stand position as shown. (Both supports.)

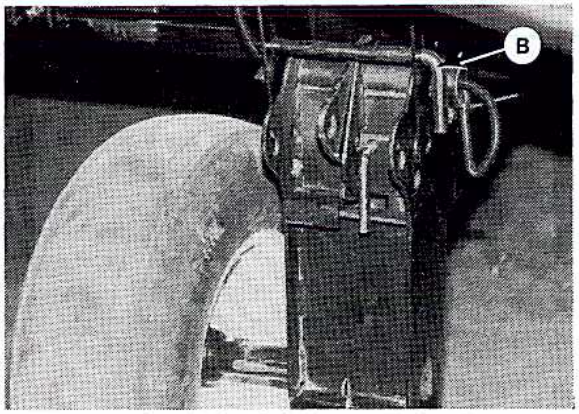

LEG PINS IN STAND POSITION

9. Left wheel caster is shipped in field position, with wheel outboard of support.

**NOTE:** Left wheel caster can be installed at left or right side of wheel support. This positions the left wheel inboard or outboard of wheel support as desired. If caster is being moved to opposite side, note that U-shaped loop (G) on caster must point to middle of wheel support. Access to loop (G) is through slot (H).

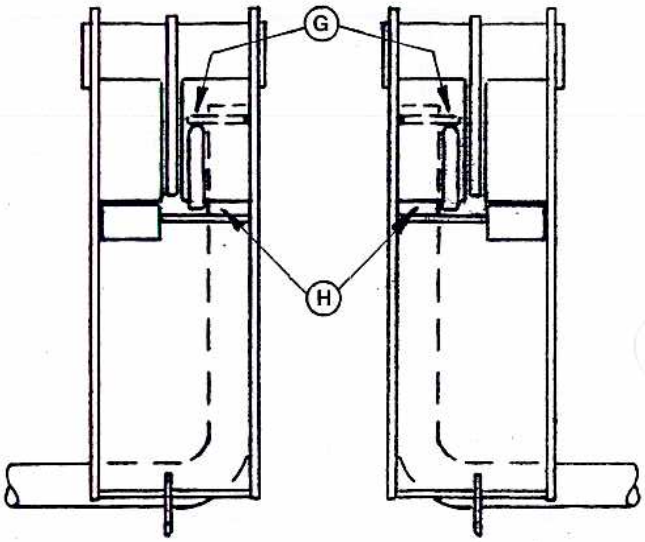

LEFT WHEEL CASTER: ALTERNATE POSITIONS

10. Lower header onto gauge wheels and 6" (150 mm) blocks under cutterbar. Remove shipping stands.

11. Check tire pressure. Inflate to 42 to 46 psi (290 to 315 kPa).

12. Assemble light package to header as follows:
a. Open left hand drive shield and route header section of wiring harness through inside of frame tube to right endsheet.

**NOTE:** The end of the harness with three individual wires with blade sockets goes to the right endsheet.

b. Route the other end of this harness (with 4-way connector) through slot in left endsheet, along driveline shield to left gauge wheel leg, down and through tube which secures wheel support to header leg.

Leaving 22 in. (560 mm) of harness protruding from inboard end of tube (A), use the large plastic ties (E) to secure the harness to driveline shield. For 30 ft. headers, also use one small plastic tie (F) to secure harness at flange on header leg.

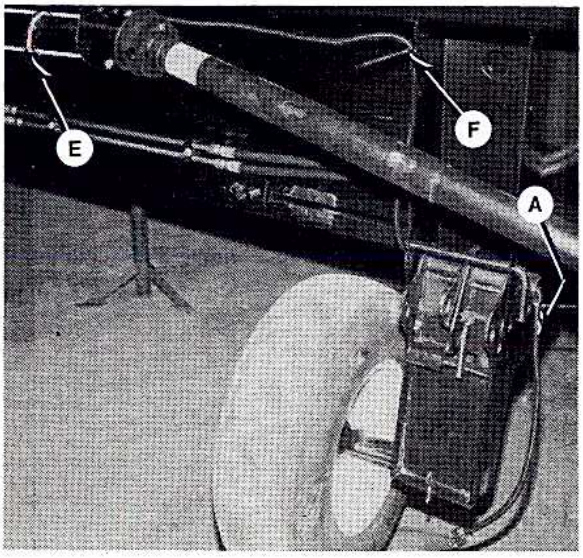

HARNESS ROUTING - LEFT WHEEL SUPPORT

**INSTALL GAUGE WHEEL / TRANSPORT OPTION**
**30 & 36 FT. (continued)**

12. Assemble light package (continued):

c. Attach ground wire (white) to 3/8 bolt (C) at left endsheet.

d. Use small plastic tie (D) to attach harness to hydraulic line at left endsheet.

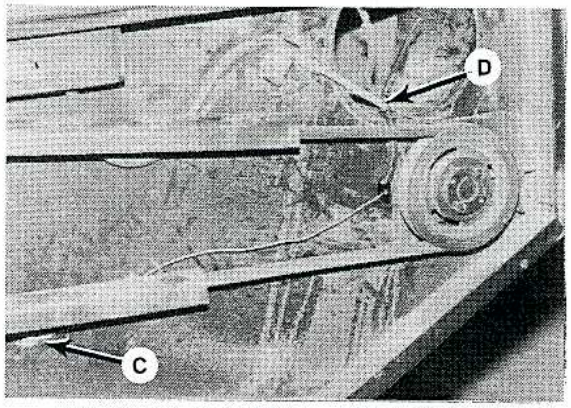


HARNESS ROUTING - LEFT ENDSHEET

e. Assemble one red light (E) and two amber lights (F) as shown.

f. Attach wiring to lights as follows:
Brown wire - red light
Yellow wire - left amber (on frame tube)
Green wire - right amber (at divider, see inset)

g. From right end, pull harness through frame tube taut and secure any excess harness to hydraulic line at right endsheet with small plastic tie. Remove any slack in wires to lights by securing excess wire to hydraulic line with small plastic tie.

13. Attach Slow Moving Vehicle Emblem at (G).

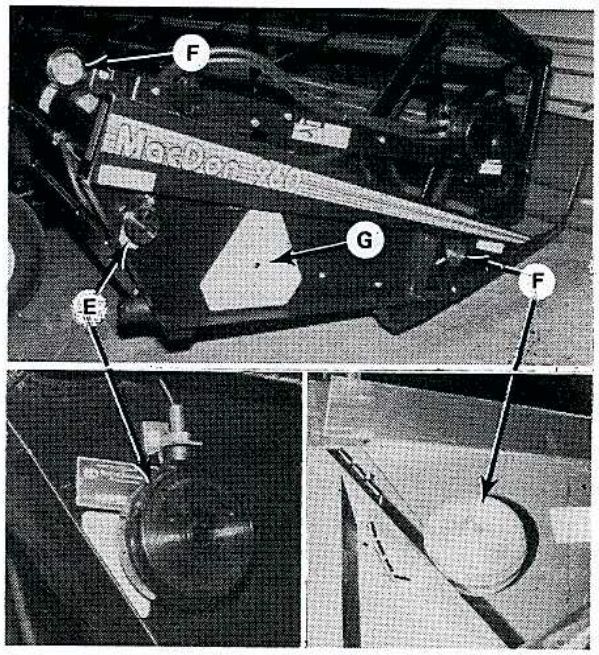


HARNESS ROUTING AND LIGHTS
RIGHT ENDSHEET

14. Store hitch in frame tube as follows:

a. Insert caster clevis end of hitch first, with open side of clevis pointed up.
**NOTE:** Hitch is designed to be stored in tube upside down from orientation in towing position.

b. Slide hitch into frame tube, taking care not to snag hydraulic line and wiring harness. Do not rotate hitch as it is pushed into frame tube.

c. Secure drawbar end of hitch by engaging retainer (J) on bar welded inside frame tube.

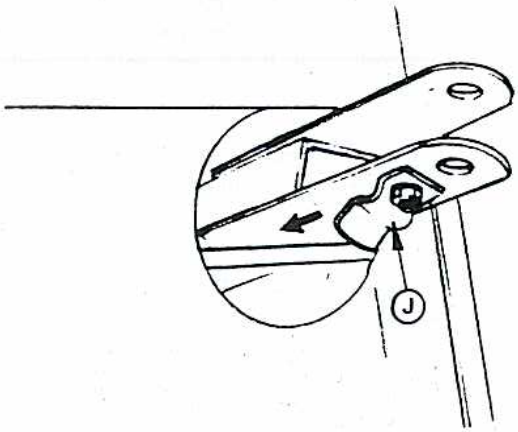


STORE HITCH IN FRAME TUBE

## INSTALL BREATHER IN WOBBLE BOX

1. Untie plastic bag (A) and replace pipe plug (B) in wobble box with breather from bag.

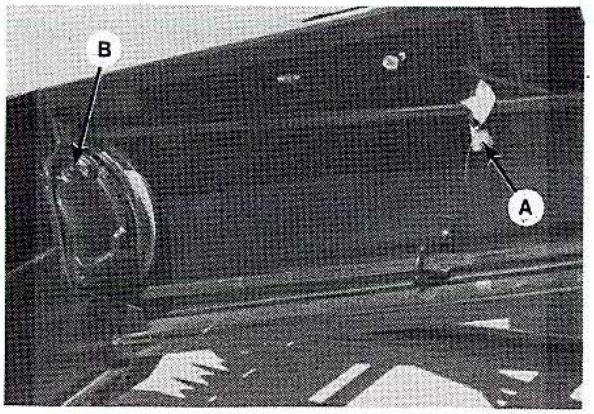

INSTALL BREATHER IN WOBBLE BOX

---

**NOTE:** For Rice Special Headers only, install reel arm slope enhancement brackets. Instructions are packaged with the brackets. See "Options and Attachments".

## ASSEMBLE BAT REEL

1. Remove all strapping and shipping wire and discard away from assembly area.

2. Raise reel support arms and engage reel props (A).

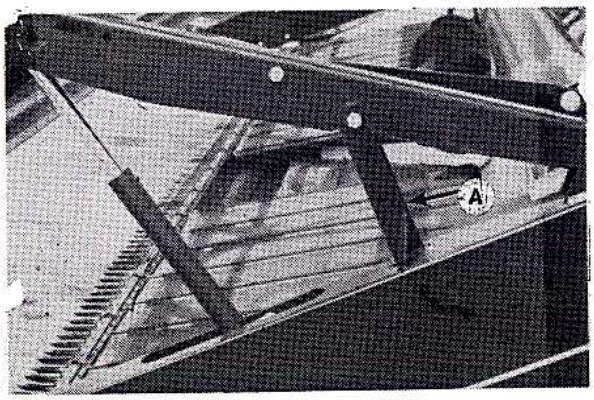

ENGAGE REEL PROPS

3. Loosen positioning screw under reel mounting channels (B) and move channels to desired position. See "Reel Position - Fore & Aft" under Header Operation. Be sure positioning screw is in the same hole at each reel arm.

4. Attach main reel tube to reel mounting channels, installing reflector (C) at left end as shown.

**NOTE:** For 36', before attaching tube at reel drive, rotate tube so that lugs on both reel tubes are aligned. This will ensure that reel bats are aligned, not staggered between left and right reels. Also for 36', install reflectors at both ends of header.

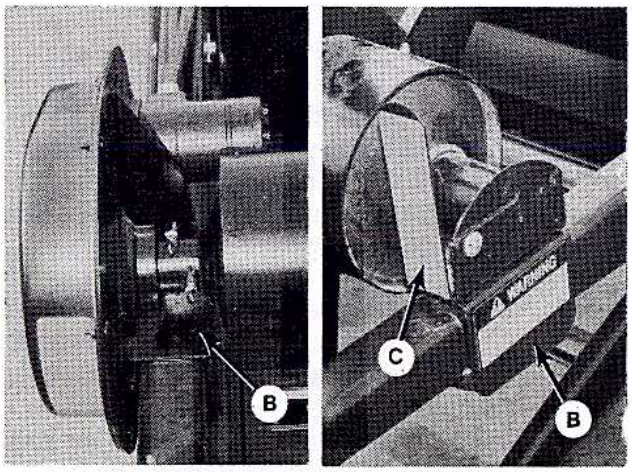

POSITION REEL MOUNTING CHANNELS AND ATTACH MAIN REEL TUBE

**ASSEMBLE BAT REEL (continued)**

**NOTE:** Install hardware securing arms to tube only finger tight to allow straightening after assembly.

5. Fasten reel arms to main reel tube using round (carriage) head bolts and flange nuts.

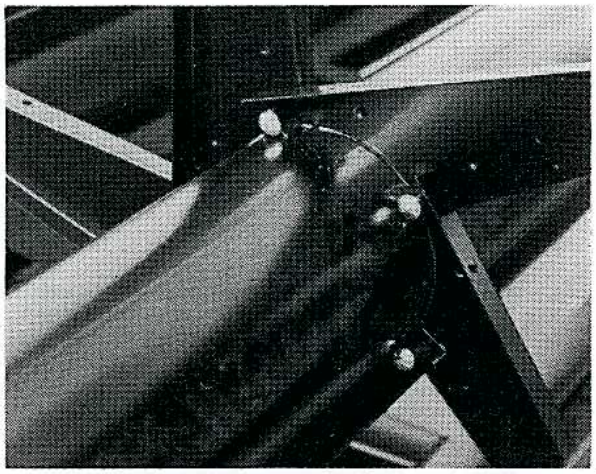

FASTEN REEL ARMS TO MAIN TUBE

6. Attach bats to reel arms using flange head bolts and flange nuts.

   **NOTE:** The end of the bat where the distance from the holes for the reel end shields to the next set of holes is 4 inches (100 mm) must be positioned at the reel motor.

7. Fasten the reel ends to the bats using flange head bolts and flange nuts (finger tight only).

8. Straighten the bats by sighting down the length of one bat, making adjustments to the reel arms until that bat is acceptably straight, then tightening the appropriate bolts at the reel tube to secure the position. Working clockwise (from the left end of the header), repeat the procedure at the next bat.

   **NOTE:** In order to straighten the last bat, it may be necessary to loosen the bolts at the tube which are common to the first and last bat.

   If, after this procedure, bats do not appear straight, loosen hardware as required to adjust.

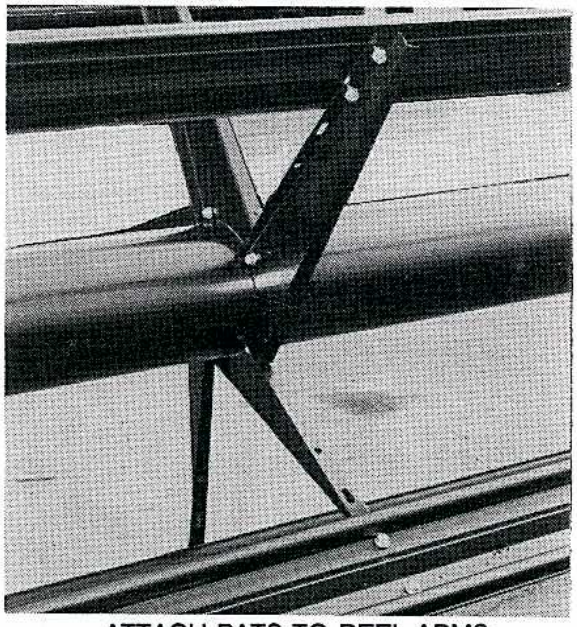

ATTACH BATS TO REEL ARMS

9. Tighten the hardware securing the reel ends to the bats.

10. Adjust reel clearance from cutterbar. See Maintenance/Service section.

11. Adjust reel brace position at (A) to center the reel between the left and right end sheets.

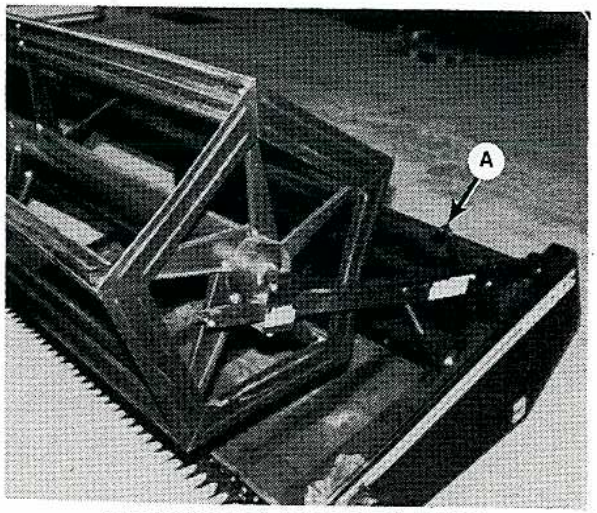


ATTACH REEL ENDS TO BATS
AND CENTER REEL WITH BRACE

**NOTE:** Instructions for assembly of the Hydraulic Fore-Aft Reel Positioner option start on page 73.

## INSTALL DRAPERS

**NOTE:** For Double Delivery Headers, right and left side drapers are different lengths. Be sure you have the drapers properly positioned. Drapers are marked with an identification number. Always install the lower number on the left side.
eg. 25 ' Double Delivery Header: Left side draper #49503 Right side draper #49504

To install:

1. Use this chart to position connector tubes at the appropriate rows of holes for desired opening size.
   **NOTE:** The second row of holes at each set is provided to allow minor adjustments.

| CONNECTION | CENTER DELIVERY OPENING WIDTH (between rollers) | DESIGNATED APPLICATION and COMMENTS |
|---|---|---|
| Row A to Row F (both drapers) | 32.5" (825 mm) | Opening for combine models: Case 2166, 1660,1460 New Holland TR97, TR87, TR96*, TR86* (* 1991 and after) |
| Row B to Row F (both drapers) | 34.5" (875 mm) | Opening for combine models: Case 2188,1680,1480; MF8570; NH TR96*, TR86* (*1990 and prior), all Gleaner, all White |
| Row B to Row E (L/H draper)<br>Row C to Row E (R/H draper) | 42" (1067 mm) | Maximum opening for shifting decks on 21' Header. |
| Row C to Row F (both drapers) | 52.5" (1335 mm) | Opening for combine models: all JD, all NH-TX, all Claas, MF 860, 8460, 8450 |
| Row C to Row E (both drapers) | 54.5" (1384 mm) | Maximum opening for shifting decks on 30' Triple Delivery Hdr. |
| Row C to Row E (L/H draper)<br>Row D to Row E (R/H draper) | 61" (1549 mm) | Maximum opening for shifting decks on 25' Double & Triple Delivery, 30' Double Delivery and 36' Headers. |
| Row D to Row F (both drapers) | 66" (676 mm) | Maximum opening on all header sizes for center delivery only. |

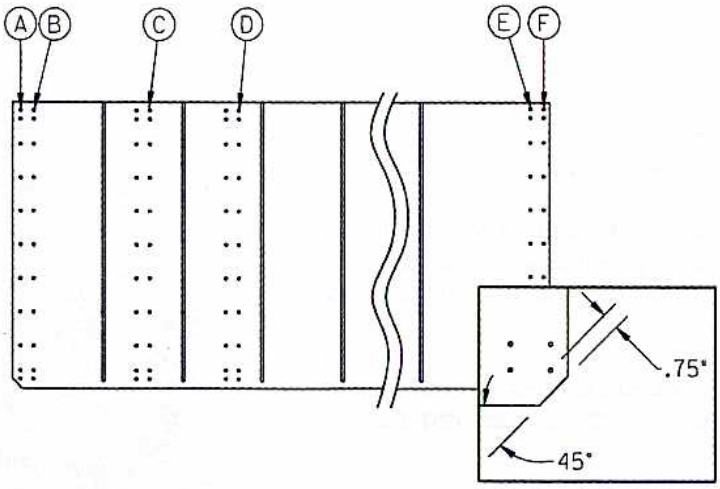


2. Cut excessive flap off of draper, leaving 3/4" (20 mm) extending above the connector. Trim the new ends at the front corners as shown. This allows draper to fit properly under front draper seal (D) to prevent tearing of front edge. Use the cut-offs as a guide for trimming.

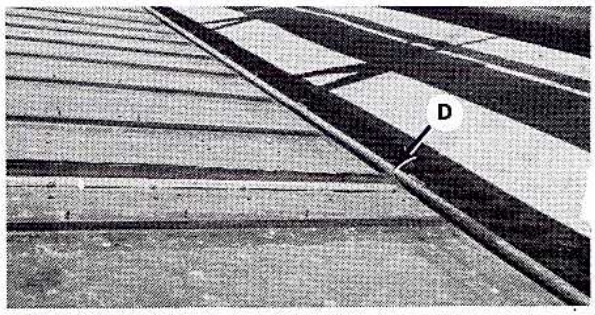

TRIM FRONT EDGE OF NEW CONNECTION

**INSTALL DRAPERS (continued)**

3. Connect draper with screw heads (C) facing center opening. If connector tube holes are closer to one end of tube than the other, place end with closer holes at the cutterbar.

4. Ensure V-guide on underside of draper engages grooves at rear of both rollers.

5. Position idler roller to snug up draper and apply draper tension. See "Draper Tension Adjustment" in Maintenance/Service section.

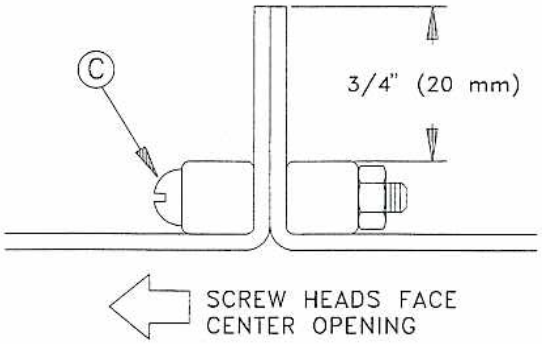


CONNECTOR SCREW HEADS

---

**INSTALL COUPLER ON HEADER REEL LIFT LINE**

21', 25' & 30':
Install quick coupler and hose extension supplied with windrower or combine adapter package on reel lift line (D) at header left leg.

36':
Install quick coupler and hose extension supplied with windrower or combine adapter package on reel lift hose (E) at header left leg.

**NOTE:** For combine adapter, coupler is shipped strapped to hydraulic filter, under adapter drive cover.

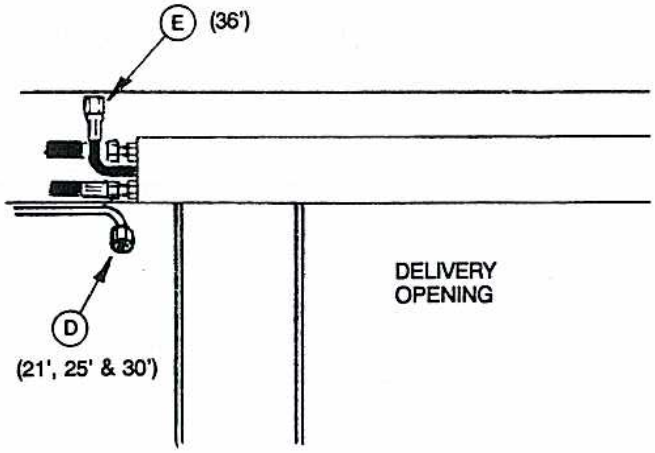


INSTALL REEL LIFT HOSE & COUPLER

## PREPARE HEADER FOR WINDROWER OR COMBINE

See the Assembly section of your Windrower Tractor or Combine Adapter Operator's Manual for instruction related specifically to preparing the Model 960 Header for a particular power unit.

## ATTACH HEADER

**CAUTION: Read the Operator's Manuals carefully to familiarize yourself with procedures and controls before attaching header to windrower or combine. Attaching instructions are provided in the Windrower Tractor and Combine Adapter Operator's Manuals.**

---

## BLEED HYDRAULIC SYSTEM

### Header Lift Cylinders

Raise and lower header a few times to allow trapped air to pass back to the reservoir.

### Reel Lift Cylinders

**CAUTION: Take care during this procedure as air in the system can cause the reel to raise and lower erratically. Keep body and hands out from under reel and reel support arms.**

**IMPORTANT:** If a pick-up reel is installed: To prevent twisting damage to reel, complete this procedure before installing finger pitch adjustment bolts. See Pick-Up Reel Operator's Manual.

1. Fully lower header and reel.

**CAUTION: Bleed screw (A) may be forced from hole by hydraulic pressure. Do not loosen screw too quickly or too far.**

2. SLOWLY loosen bleed screw (A) in right hand reel lift cylinder. (For 36 ft. header, bleed screw is in left hand cylinder.)
3. Start engine and activate reel lift. Left hand cylinder will reach full extension first, then oil will pass to right hand cylinder. (For 36 ft. header, sequence will be: center cylinder, R/H cylinder, L/H cylinder.)
4. Continue to activate reel lift until oil comes out around bleed screw.
5. Tighten bleed screw.

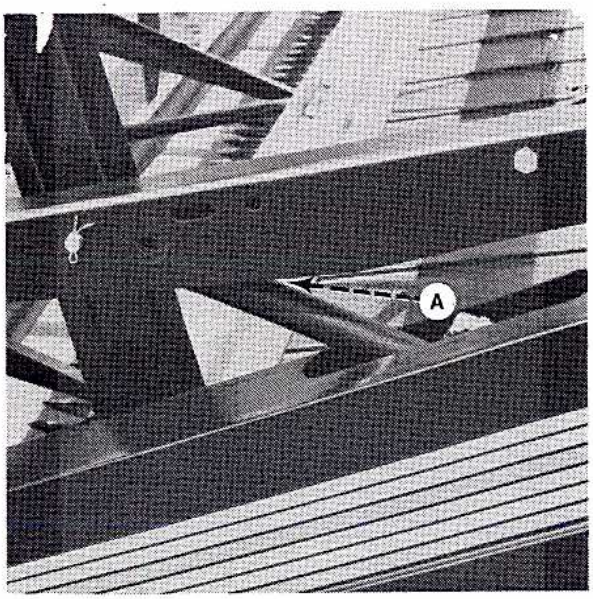


REEL LIFT CYLINDER BLEED SCREW
(36 FT. SHOWN - OTHER SIZES AT R/H)

---

## ADJUSTMENTS & CHECKS

Perform final adjustments and checks as listed on the "Pre-Delivery Checklist" (yellow insert) to ensure the machine is field-ready. Use the Operator's Manual for directions.

## HYDRAULIC REEL FORE-AFT KIT INSTALLATION INSTRUCTIONS

1. Attach cylinder to reel drive at:
   - R/H reel support arm (21',25' 30' Headers)
   - Center reel support arm (36' Header)

**NOTE:** IF CYLINDER MOUNTING BRACKETS ARE WELDED TO REEL DRIVE SUPPORT, PARTS AND PROCEDURES MARKED * ARE NOT REQUIRED.

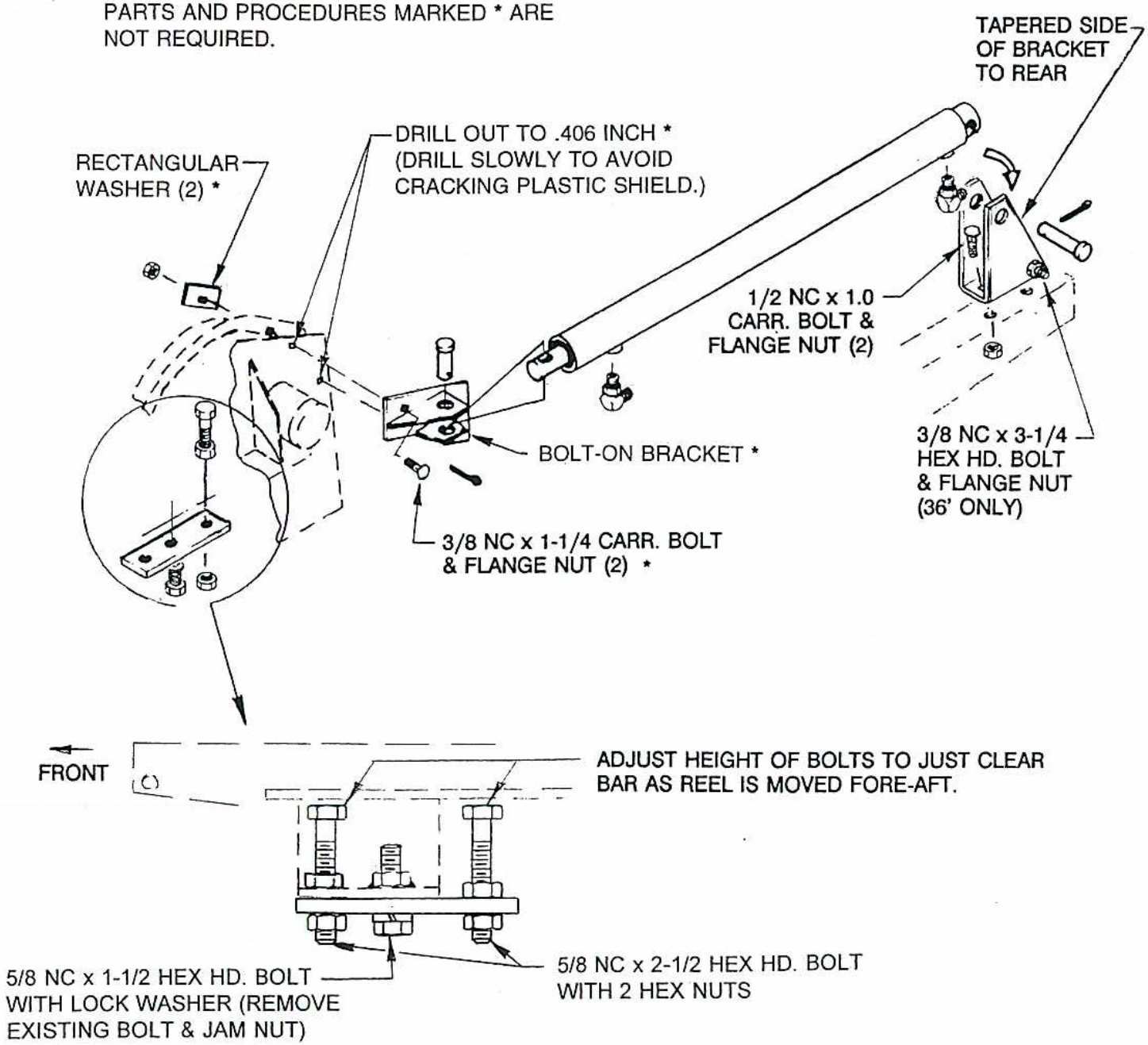

## HYDRAULIC REEL FORE-AFT KIT INSTALLATION INSTRUCTIONS

2. Attach cylinder(s) at:
   - L/H reel support arm (21',25' 30' Headers)
   - L/H and R/H reel support arms (36' Header) - L/H shown

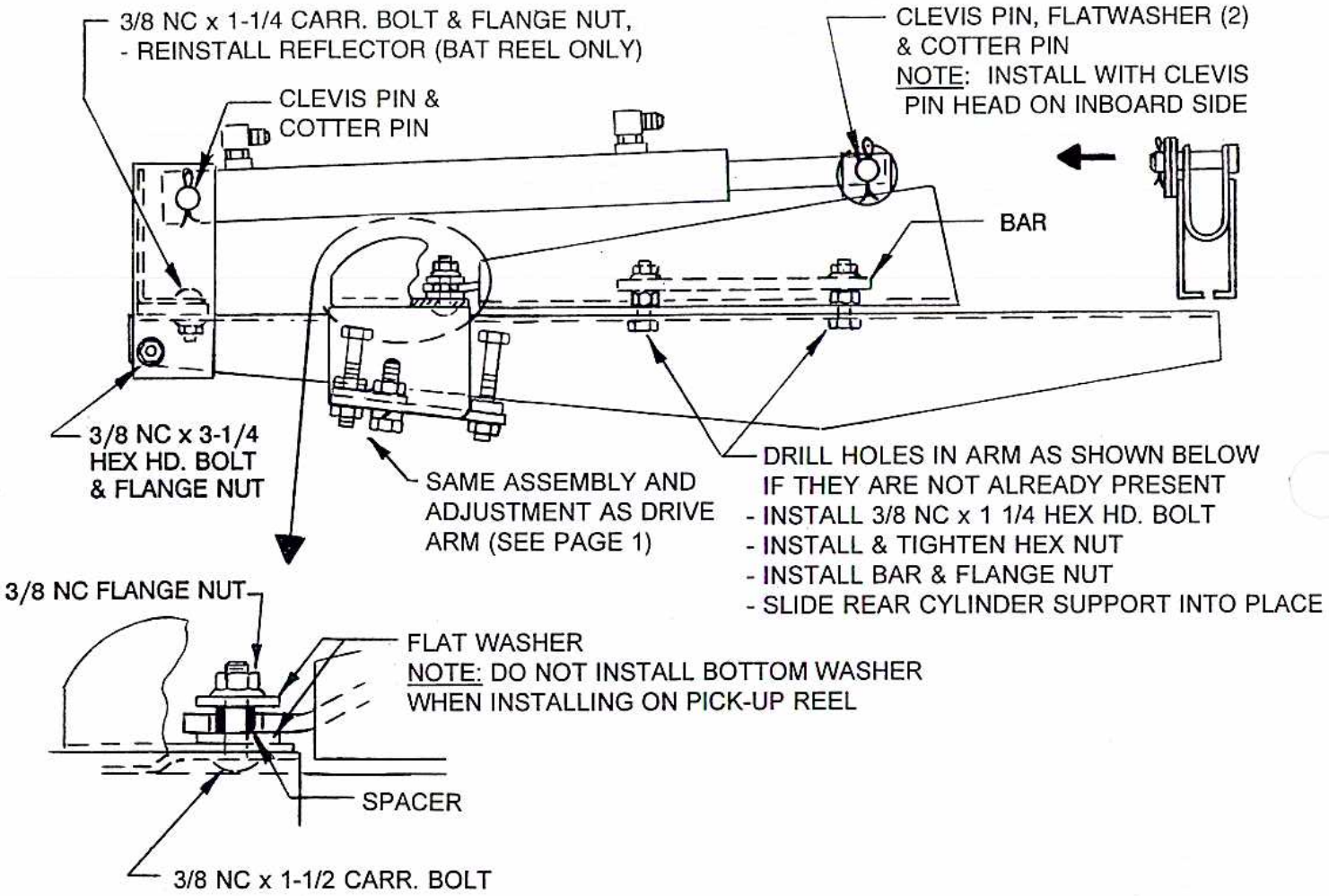


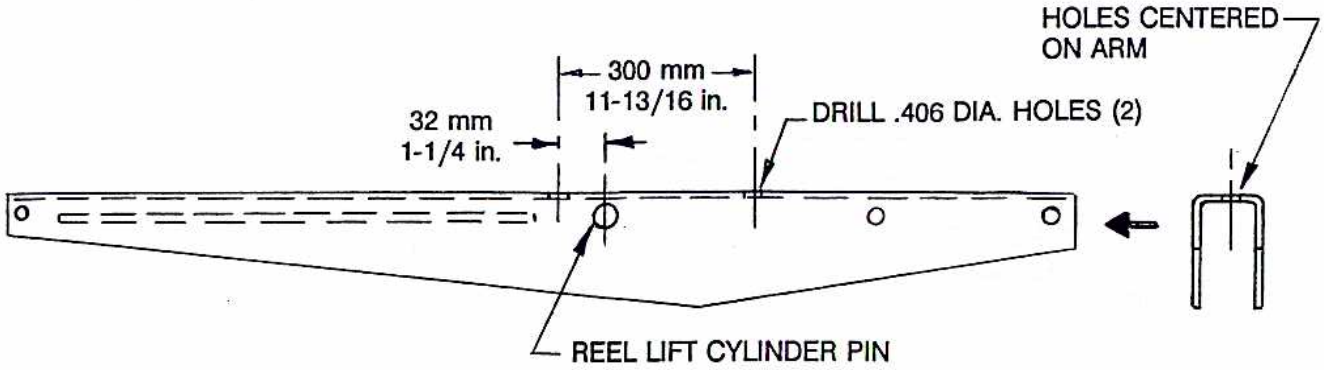

## HYDRAULIC REEL FORE-AFT KIT INSTALLATION INSTRUCTIONS

3. Connect hoses (21',25' 30' Headers):

**IMPORTANT:** To prevent damage to fore-aft kit and/or reel, before moving reel with fore-aft kit:
a) Remove cylinder pins at rod ends and support cylinders to allow unobstructed movement of cylinder rods.
b) Activate hydraulics, extending and retracting cylinders several times to fill system with oil and ensure cylinders are in phase.
c) Reconnect cylinder rod ends.

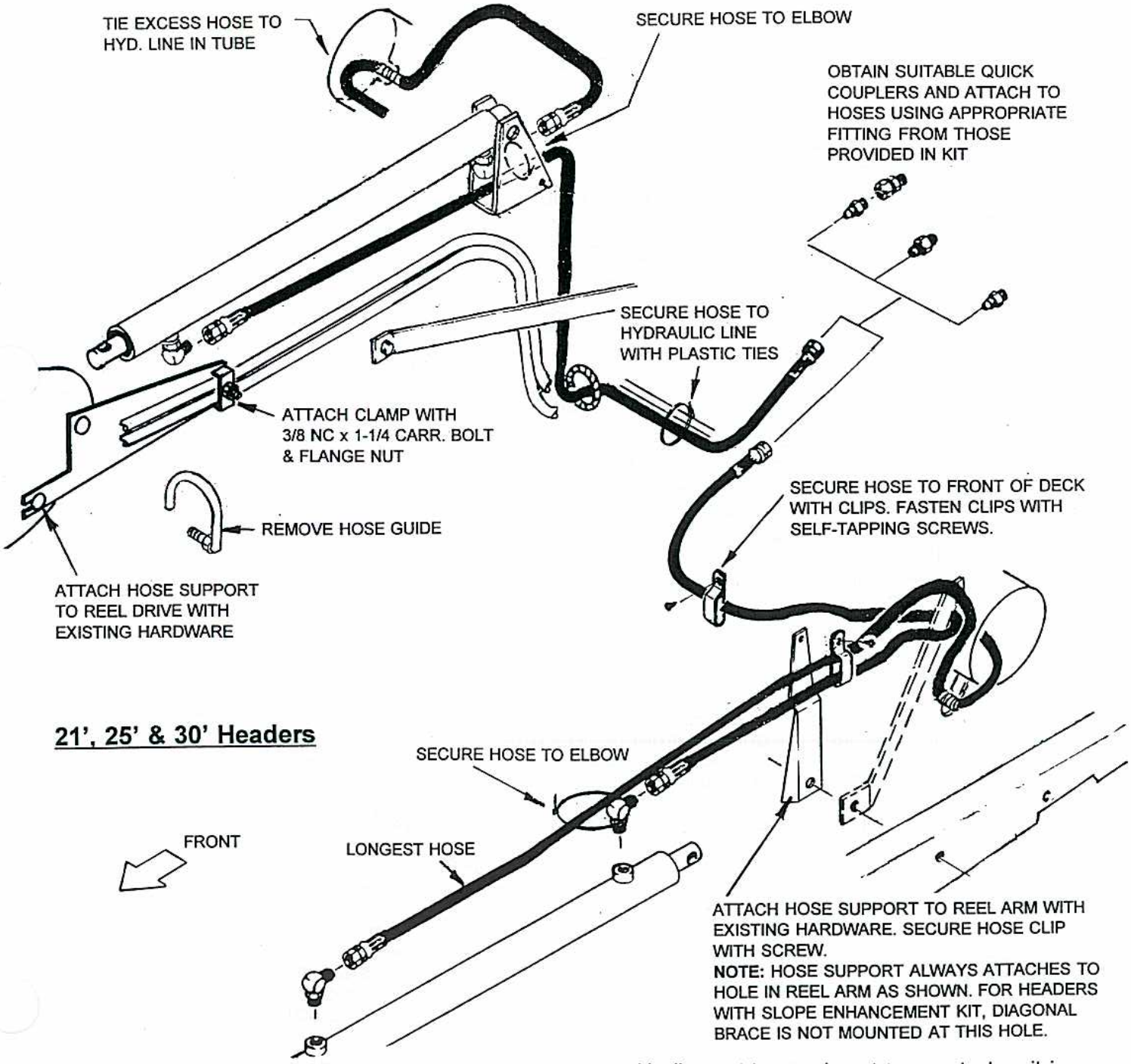


**IMPORTANT:** To prevent damage to reel from contact with diagonal brace, do not turn reel when it is positioned fully back for transport.

## HYDRAULIC REEL FORE-AFT KIT INSTALLATION INSTRUCTIONS

3. Connect hoses (36' Header):

**IMPORTANT:** To prevent damage to fore-aft kit and/or reel, before moving reel with fore-aft kit:
a) Remove cylinder pins at rod ends and support cylinders to allow unobstructed movement of cylinder rods.
b) Activate hydraulics, extending and retracting cylinders several times to fill system with oil and ensure cylinders are in phase.
c) Reconnect cylinder rod ends.

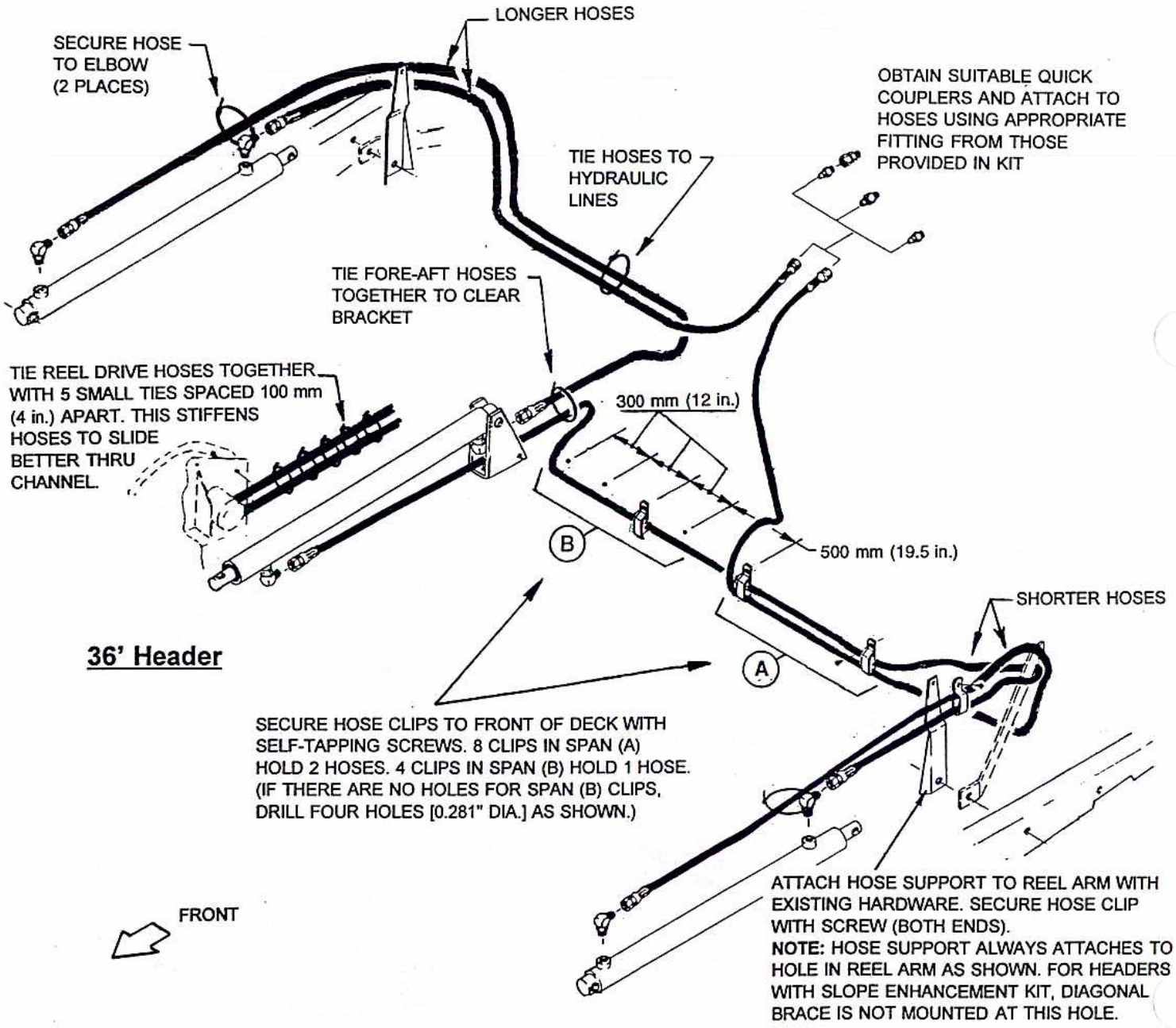


**IMPORTANT:** To prevent damage to reel from contact with diagonal brace, do not turn reel when it is positioned fully back for transport.

# INDEX

## S (continued)



## T



## U



## W

# Harvest Header
# Pre-Delivery Checklist

HEADER: Serial Number_____

COMBINE ADAPTER: Serial Number_____

Perform these checks and adjustments prior to delivery to your customer. See the Operator's Manual for adjustment details.

**CAUTION: Carefully follow the instructions given. Be alert for safety related messages which bring your attention to hazards and unsafe practices.**

- ☐ Check for shipping damage or missing parts.
- ☐ Adjust reel fore-aft position.
- ☐ Adjust reel clearance from cutterbar. (2 inches [50 mm])
- ☐ Check sickle drive belt tension.
- ☐ Check tire pressure. (Units with gauge wheels.)
  6.70-15 tire: 24 to 28 psi (165 to 195 kPa) 9.5L-14 tire: 42 to 46 psi (290 to 315 kPa)
- ☐ Check gauge wheel bolt torque. (Units with gauge wheels.)
  4 bolt hub: 55 ft.lbs. (75 N·m) 6 bolt hub: 85 ft.lbs. (115 N·m)
- ☐ Check header flotation. (50 to 70 lbs. [220 to 300 N])
- ☐ Check that header is level.
- ☐ Grease all bearings and drivelines.
- ☐ Install breather in wobble box.
- ☐ Check wobble box lube level.
- ☐ Check that header delivery opening is adjusted to align with combine feeder house opening. (Straight Cut Only)
- ☐ Check that rear of feeder draper moves up and down freely. (Straight Cut Only)
- ☐ Bleed reel lift cylinder.
- ☐ Check hydraulic hose and wiring harness routing, ensuring adequate clearance with header up or down. Be sure colour coding on hydraulic hoses is matched and that all hydraulic connections are fully engaged.
- ☐ Set reel speed to maximum and operate header sickle and draper drives slowly for 5 minutes.
- ☐ Check hydraulic oil level in adapter reservoir. (Straight Cut Only)
- ☐ Check draper tension.
- ☐ Run machine at operating speed for 15 minutes, STOP ENGINE and check for belt/idler alignment and heated bearings. Check sickle sections for discolouration caused by misalignment of components.
- ☐ Check lights are functional.

Date Checked:_____ Checked by:_____

# MacDon

*The Quiet Leader*

**46015 Issue 7/97**
Sugg. Retail: $15.00

Printed in Canada