Model 3020 PULL-TYPE WINDROWER

OPERATOR'S MANUAL

Form 147021 Issue 06/03

Sugg. Retail: $15.00

INTRODUCTION

Your new Pull-Type Windrower is designed to cut, and lay in windrows, a wide variety of grain and specialty crops. Windrowing allows starting the harvest earlier, protects the crop from wind damage, and gives you more flexibility in scheduling combine time.

Use this manual as your first source of information about the machine. If you follow the instructions given in this manual, your Windrower will work well for many years.

The manual contains instructions for "Safety", "Operation", and "Maintenance/Service". A separate booklet provides information on "Unloading and Assembly".

CAREFULLY READ ALL THE MATERIAL PROVIDED BEFORE ATTEMPTING TO UNLOAD, ASSEMBLE, OR USE THE MACHINE.

Use the Table of Contents and the Index to guide you to specific areas. Study the Table of Contents to familiarize yourself with how the material is organized.

Keep this manual handy for frequent reference and to pass on to new operators or owners. Call your Dealer if you need assistance, information, or additional copies of this manual.

NOTE: Right hand (R/H) and left hand (L/H) designations are determined from the operator's position, facing forward.

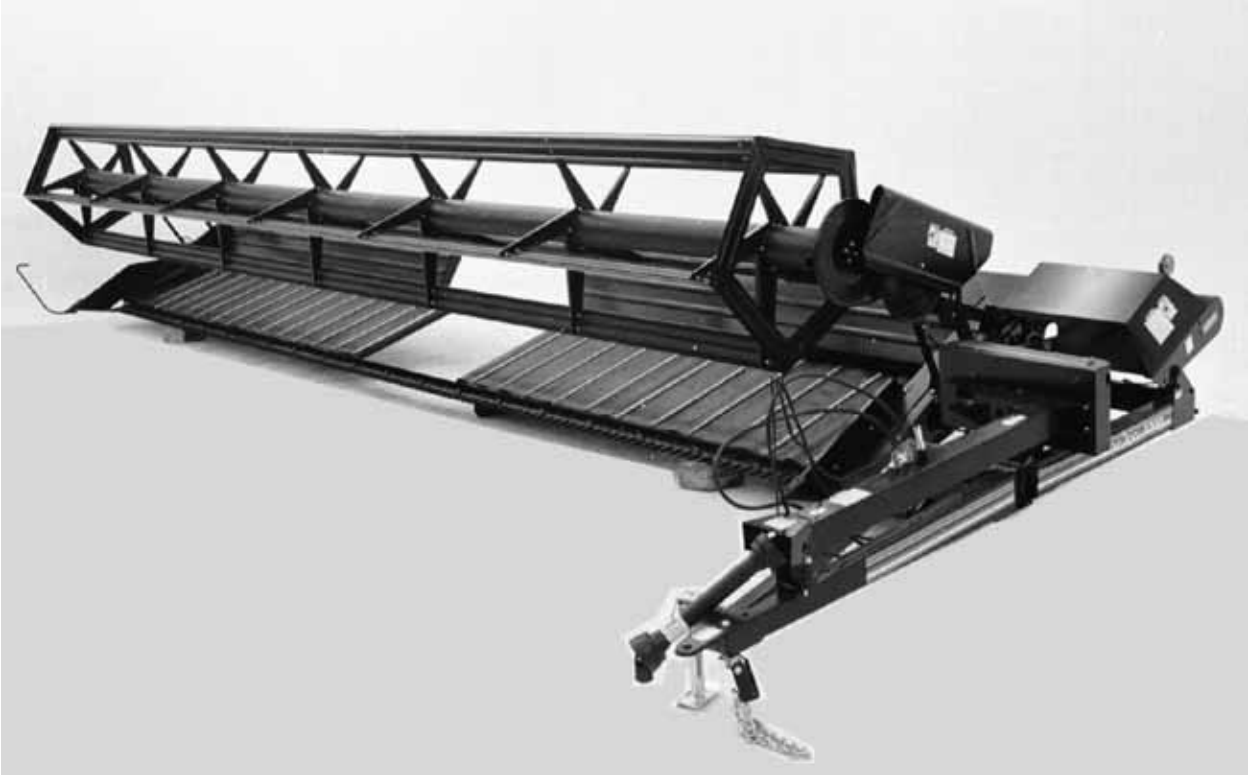

TABLE OF CONTENTS

TABLE OF CONTENTS

TABLE OF CONTENTS

SERIAL NUMBER LOCATION

Record the serial number in the space provided.

Pull Type Windrower:

_____

Serial number plate (A) is located on the side of the left hand end frame.

NOTE: When ordering parts and service, be sure to give your dealer the complete and proper serial number.

SERIAL PLATE LOCATION: WINDROWER

SAFETY

SAFETY ALERT SYMBOL

This safety alert symbol indicates important safety messages in this manual and on safety signs on the windrower.

This symbol means:

ATTENTION!
BECOME ALERT!
YOUR SAFETY IS INVOLVED!

Carefully read and follow the safety message accompanying this symbol.

Why is SAFETY important to you?

3 BIG REASONS

- ACCIDENTS DISABLE AND KILL
- ACCIDENTS COST
- ACCIDENTS CAN BE AVOIDED

SIGNAL WORDS

Note the use of the signal words DANGER, WARNING, and CAUTION with safety messages. The appropriate signal word for each message has been selected using the following guidelines:

DANGER – Indicates an imminently hazardous situation that, if not avoided, will result in death or serious injury.

WARNING – Indicates a potentially hazardous situation that, if not avoided, could result in death or serious injury. It is also used to alert against unsafe practices.

CAUTION – Indicates a potentially hazardous situation that, if not avoided, may result in minor or moderate injury. It is also used as a reminder of good safety practices.

SAFETY SIGNS

- The safety signs reproduced here appear on the windrower at the locations listed.
- Keep safety signs clean and legible at all times.
- Replace safety signs that are missing or become illegible.
- If original parts on which a safety sign was installed are replaced, be sure the repair part also bears the current safety sign.
- Safety signs are available from your Dealer Parts Department.

To install safety signs:
1. Be sure the installation area is clean and dry.
2. Decide on the exact location before you remove the decal backing paper.
3. Remove the smaller portion of the split backing paper.
4. Place the sign in position and slowly peel back the remaining paper, smoothing the sign as it is applied.
5. Small air pockets can be smoothed out or pricked with a pin.

DRIVELINE SHIELD

DRIVELINE INNER SHAFT

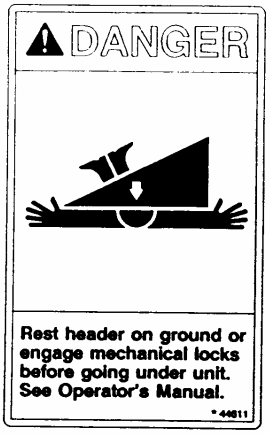

SICKLE DRIVE COVER

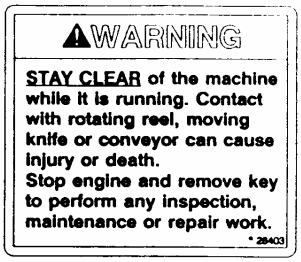

FRONT HITCH

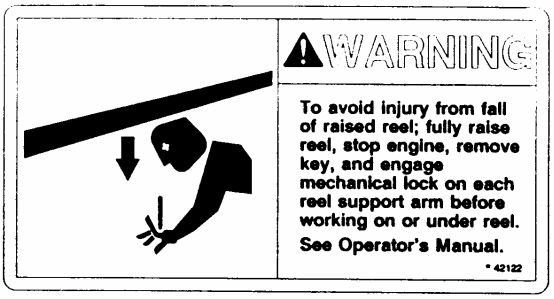

REEL SUPPORT ARMS

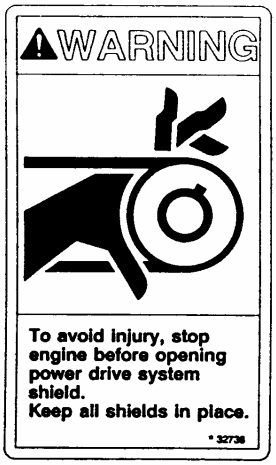

DRIVE SHIELDS

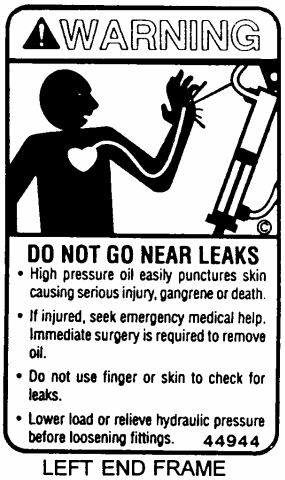

LEFT END FRAME

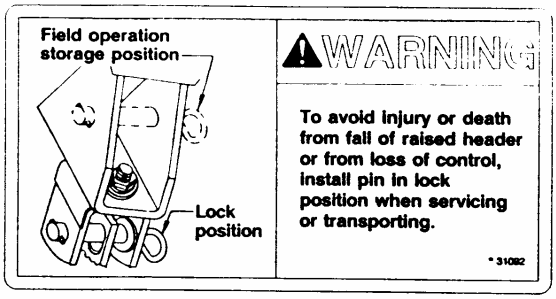

NEAR LEFT WHEEL

SAFETY SIGNS (continued)

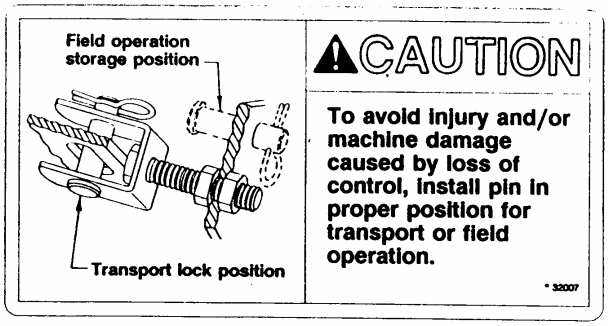

NEAR RIGHT WHEEL

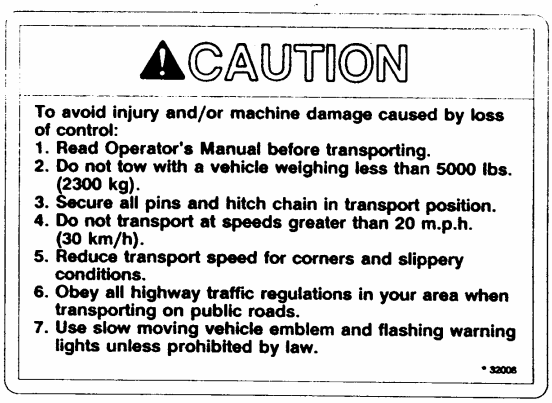

FRONT HITCH

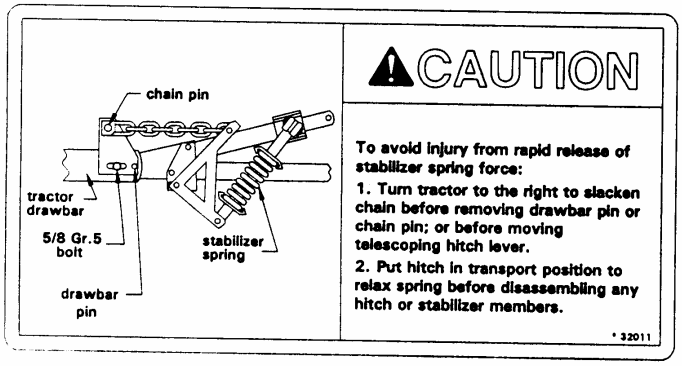

FRONT HITCH - 36 ft. ONLY

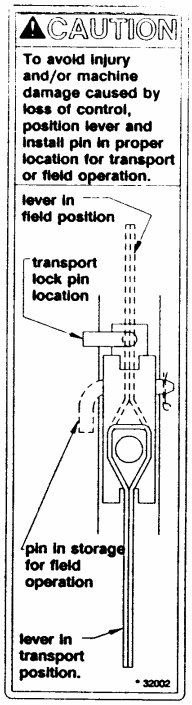

FRONT HITCH

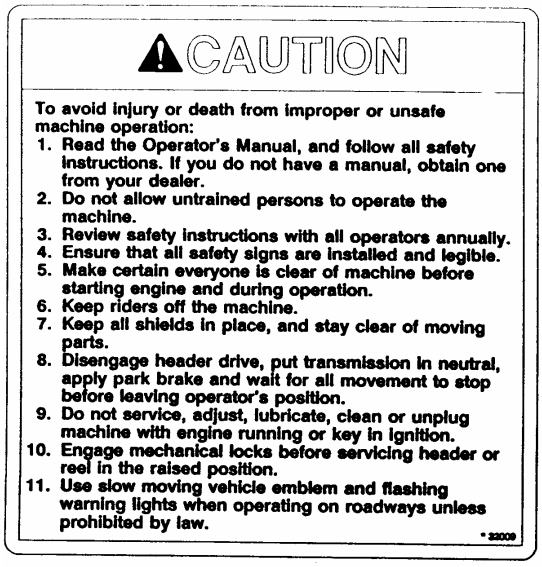

MAIN DRIVES SHIELD

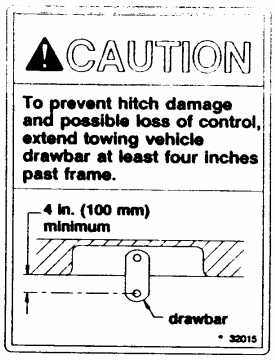

FRONT HITCH

SAFETY

GENERAL SAFETY

The following are general farm safety precautions that should be part of your operating procedure for all types of machinery.

1. **Protect yourself.**

   When assembling, operating and servicing machinery, wear all the protective clothing and personal safety devices that COULD be necessary for the job at hand. Don't take chances.

   You may need:
   - **a hard hat.**
   - **protective shoes with slip resistant soles.**
   - **protective glasses or goggles.**
   - **heavy gloves.**
   - **wet weather gear.**
   - **respirator or filter mask.**
   - **hearing protection. Be aware that prolonged exposure to loud noise can cause impairment or loss of hearing. Wearing a suitable hearing protective device such as ear muffs (A) or ear plugs (B) protects against objectionable or loud noises.**

2. **Provide a first-aid kit for use in case of emergencies.**

3. **Keep a fire extinguisher on the machine. Be sure the extinguisher is properly maintained and be familiar with its proper use.**

4. **Keep young children away from machinery at all times.**

5. **Be aware that accidents often happen when the operator is tired or in a hurry to get finished. Take the time to consider the safest way. Never ignore warning signs of fatigue.**

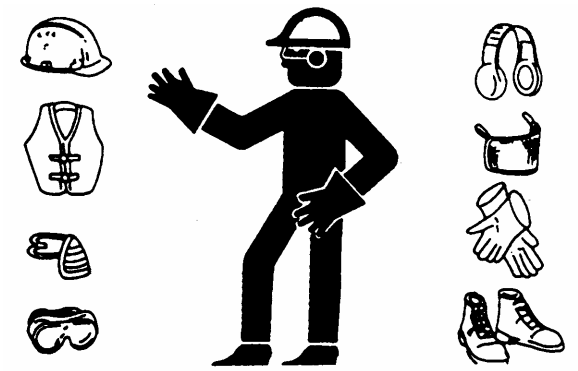

PROTECT YOURSELF

PROTECT AGAINST NOISE

BE PREPARED FOR EMERGENCIES

GENERAL SAFETY (continued)

6. **Wear close-fitting clothing and cover long hair. Never wear dangling items such as scarves or bracelets.**

7. **Keep hands, feet, clothing and hair away from moving parts. Never attempt to clear obstructions or objects from a machine while the engine is running.**

8. **Keep all shields in place. Never alter or remove safety equipment. Make sure driveline guards can rotate independently of the shaft and can telescope freely.**

9. **Use only service and repair parts made or approved by the equipment manufacturer. Substituted parts may not meet strength, design, or safety requirements.**

10. **Do not modify the machine. Unauthorised modifications may impair the function and/or safety and affect machine life.**

11. **Stop engine and remove key from ignition before leaving operator's seat for any reason. A child or even a pet could engage an idling machine.**

12. **Keep the area used for servicing machinery clean and dry. Wet or oily floors are slippery. Wet spots can be dangerous when working with electrical equipment. Be sure all electrical outlets and tools are properly grounded.**

13. **Use adequate light for the job at hand.**

14. **Keep machinery clean. Straw and chaff on a hot engine are a fire hazard. Do not allow oil or grease to accumulate on service platforms, ladders or controls. Clean machines before storage.**

15. **Never use gasoline, naphtha or any volatile material for cleaning purposes. These materials may be toxic and/or flammable.**

16. **When storing machinery, cover sharp or extending components to prevent injury from accidental contact.**

NEVER WEAR LOOSE
OR DANGLING CLOTHES

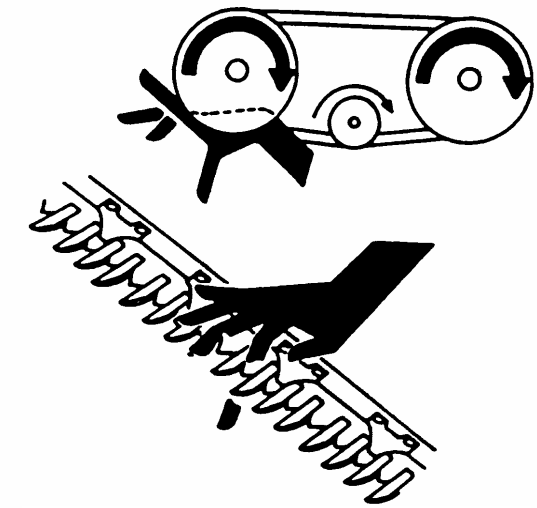

KEEP AWAY FROM MOVING PARTS

KEEP SERVICE AREA CLEAN AND DRY

SPECIFICATIONS

NOTE: Specifications listed only under 25 ft. column are common to all sizes, with exceptions listed under appropriate column.

	21 FT.	*25 FT.*	*30 FT.*	*36 FT.*
DIMENSIONS				
Overall Width:				
Transport Position	10'6" (3200 mm)	10'10" (3300 mm)	11'2" (3400 mm)	12' (3660 mm)
Field Position	25'4" (7720 mm)	29'4" (8940 mm)	34'4" (10450 mm)	40'4" (12290 mm)
Overall Length:				
Transport Position	32'3" (9830 mm)	36'2" (11028 mm)	41' (12500 mm)	49'2" (14985 mm)
Field Position	13'4" (4070 mm)	13'4" (4070 mm)	13'4" (4070 mm)	15'8" (4775 mm)
Overall Height:				
Transport Position		8'10" (2700 mm)		
Mass	3100 lbs (1450 kg)	3400 lbs (1540 kg)	3750 lbs (1700 kg)	4500 lbs (2040 kg)
SICKLE				
Drive		Crank Wheel - Pitman System		
Cutting Height Range		0 to 45" (0 to 1150 mm)		
Stroke Length		3" (76 mm)		
Speed		1250 strokes per minute		
Width of Cut (nominal)	21' (6400 mm)	25' (7620 mm)	30' (9150 mm)	36' (10975 mm)
Header Lift		Hydraulic (from tractor)		
REEL				
Type	1 x 21'	1 x 25'	1 x 30'	2 x 18'
Diameter		49.2" (1250 mm)		
Lift Range (above cutterbar)		1 to 28.5" (25 to 725 mm)		
Speed		27 to 50 RPM		
Lift		Hydraulic (from tractor)		
DRAPERS & DELIVERY OPENING				
Width		41.5" (1054 mm)		
Speed		275 to 480 ft./min. (84 to 146 m/min.)		
Angle (at 6" cutting height)		16° at standard frame height 21° at raised frame height		
Delivery Opening Widths (between rollers)		45.5" (1155 mm) 53.0" (1345 mm) 60.5" (1535 mm)		53.0" (1345 mm) 60.8" (1545 mm) 68.7" (1745 mm) 76.6" (1945 mm)
Delivery Opening Height		33.5” (850 mm) at standard frame height 38.6” (980 mm) at raised frame height		
TIRES				
Size		9.5L - 14I1 Rib Implement		
Pressure		24 to 28 psi (165 to 190 kPa)		
DRIVES				
Sickle		Mechanical		
Reel		Mechanical		
Drapers		Mechanical		
TRACTOR REQUIREMENTS				
Minimum Weight		5000 lbs. (2270 kg)		6000 lbs. (2720 kg)
Minimum Power		40 hp (30 kw)		50 hp (38 kw)
PTO Speed		540 or 1000		
Hydraulics		Dual		
Minimum Pressure		1800 psi (12400 kPa)		

TORQUE SPECIFICATIONS

CHECKING BOLT TORQUE

The tables shown below give correct torque values for various bolts and capscrews. Tighten all bolts to the torques specified in chart unless otherwise noted throughout this manual. Check tightness of bolts periodically, using bolt torque chart as a guide. Replace hardware with the same strength bolt.

ENGLISH TORQUE SPECIFICATION

Bolt Dia. "A"	NC Bolt Torque*			
	SAE 5		SAE 8	
	N·m	[lb-ft]	N·m	[lb-ft]
1/4"	12	[9]	15	[11]
5/16"	24	[18]	34	[25]
3/8"	43	[32]	56	[41]
7/16"	68	[50]	95	[70]
1/2"	102	[75]	142	[105]
9/16"	149	[110]	202	[149]
5/8"	203	[150]	271	[200]
3/4"	359	[265]	495	[365]
7/8"	569	[420]	813	[600]
1"	867	[640]	1205	[890]

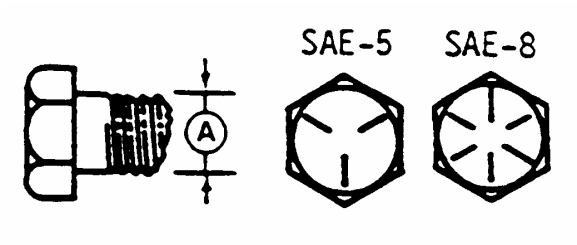

METRIC TORQUE SPECIFICATIONS

Bolt Dia. "A"	Bolt Torque*			
	8.8		10.9	
	N·m	[lb-ft]	N·m	[lb-ft]
M3	0.5	[.4]	1.8	[1.3]
M4	3	[2.2]	4.5	[3.3]
M5	6	[4]	9	[7]
M6	10	[7]	15	[11]
M8	25	[18]	35	[26]
M10	50	[37]	70	[52]
M12	90	[66]	125	[92]
M14	140	[103]	200	[148]
M16	225	[166]	310	[229]
M20	435	[321]	610	[450]
M24	750	[553]	1050	[774]
M30	1495	[1103]	2100	[1550]
M36	2600	[1917]	3675	[2710]

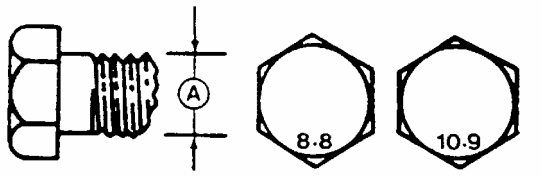

Torque figures indicated above are valid for non-greased or non-oiled threads and heads unless otherwise specified. Do not grease or oil bolts or capscrews unless specified in this manual. When using locking elements, increase torque values by 5%.

* Torque value for bolts and capscrews are identified by their head markings.

TORQUE SPECIFICATIONS

TIGHTENING HYDRAULIC O-RING FITTINGS*

1. Inspect O-ring and seat for dirt or obvious defects.
2. On angle fittings, back the lock nut off until washer bottoms out at top of groove.
3. Hand tighten fitting until back up washer or washer face (if straight fitting) bottoms on face and O-ring is seated.
4. Position angle fittings by unscrewing no more than one turn.
5. Tighten straight fittings to torque shown.
6. Tighten angle fittings to torque shown while holding body of fitting with a wrench.

* The torque values shown are based on lubricated connections as in reassembly.

Thread Size (in.)	Nut Size Across Flats (in.)	Torque Value*		Recommended Turns to Tighten (after finger tightening)	
		N·m	[lb-ft]	Flats	Turns
3/8	1/2	8	[6]	2	1/3
7/16	9/16	12	[9]	2	1/3
1/2	5/8	16	[12]	2	1/3
9/16	11/16	24	[18]	2	1/3
3/4	7/8	46	[34]	2	1/3
7/8	1	62	[46]	1-1/2	1/4
1-1/16	1-1/4	102	[75]	1	1/6
1-3/16	1-3/8	122	[90]	1	1/6
1-5/16	1-1/2	142	[105]	3/4	1/8
1-5/8	1-7/8	190	[140]	3/4	1/8
1-7/8	2-1/8	217	[160]	1/2	1/12

TIGHTENING HYDRAULIC FLARE-TYPE TUBE FITTINGS*

1. Check flare and flare seat for defects that might cause leakage.
2. Align tube with fitting before tightening.
3. Lubricate connection and hand tighten swivel nut until snug.
4. To prevent twisting the tube(s), use two wrenches. Place one wrench on the connector body and with the second tighten the swivel nut to the torque shown.

* The torque values shown are based on lubricated connections as in reassembly.

Tube Size O.D. (in.)	Nut Size Across Flats (in.)	Torque Value*		Recommended Turns to Tighten (after finger tightening)	
		N·m	[lb-ft]	Flats	Turns
3/16	7/16	8	[6]	1	1/6
1/4	9/16	12	[9]	1	1/6
5/16	5/8	16	[12]	1	1/6
3/8	11/16	24	[18]	1	1/6
1/2	7/8	46	[34]	1	1/6
5/8	1	62	[46]	1	1/6
3/4	1-1/4	102	[75]	3/4	1/8
7/8	1-3/8	122	[90]	3/4	1/8

OPERATION

YOUR RESPONSIBILITIES AS AN OWNER/OPERATOR

CAUTION:

1. **It is your responsibility to read and understand this manual completely before operating the windrower. Contact your dealer if an instruction is not clear to you.**

2. **Follow all safety messages in the manual and on safety signs on the machine.**

3. **Remember that YOU are the key to safety. Good safety practices protect you and the people around you.**

4. **Before allowing anyone to operate the windrower, for however short a time or distance, make sure they have been instructed in its safe and proper use.**

5. **Review the manual and all safety related items with all operators annually.**

6. **Be alert for other operators not using recommended procedures or not following safety precautions. Correct these mistakes immediately , before an accident occurs.**

7. **Do not modify the machine. Unauthorized modifications may impair the function and/or safety and affect machine life.**

8. **The safety information given in this manual does not replace safety codes, insurance needs, or laws governing your area. Be sure your machine meets the standards set by these regulations.**

READ THE OPERATOR'S MANUAL

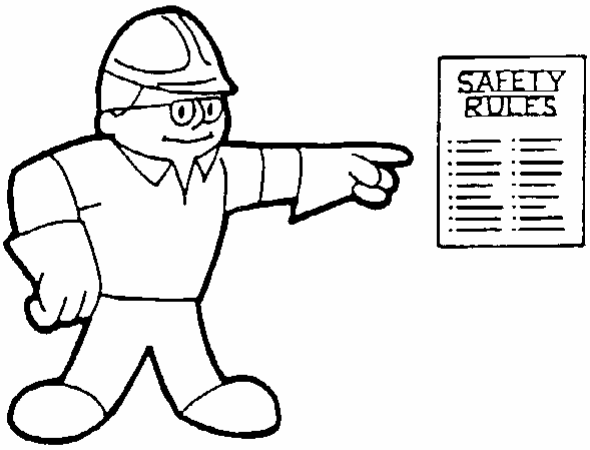

FOLLOW SAFETY RULES

TO THE NEW OPERATOR

It's natural for an operator to be anxious to get started with a new machine. Please take the time to familiarize yourself with the windrower by reading the Operator's Manual and safety signs before attempting operation.

OPERATION

PREPARING THE TRACTOR

1. Select proper tractor size:
   For 21', 25' or 30' units, the minimum power required is 40 hp (30 kw) and minimum tractor weight is 5000 lbs. (2270 kg).
   For 36' unit, the minimum power required is 50 hp (38 kw) and minimum tractor weight is 6000 lbs. (2720 kg).
   For all sizes, minimum hydraulics required are 1800 psi (12400 kPa) pressure with dual remote capability.

2. For tractors with variable PTO speed, select 540 or 1000 rpm to match windrower speed option. See "Preparing the Windrower" in this section.

3. Adjust tractor drawbar to meet ASAE Standard specifications as listed below for the PTO speed to be used (540 or 1000 rpm). An improperly located drawbar may damage the universal joints of the implement driveline, and/or affect machine performance

   Be sure the following specifications are met:

   (A) 14 in. (356 mm) for 540 rpm.
   16 in. (406 mm) for 1000 rpm.

   (B) 6 to 12 in. (152 to 305 mm)

   (C) 13 to 17 in. (330 to 432 mm)

   NOTE: An offset drawbar (D) can be turned over if required to meet specifications (B) and (C).

4. Secure the drawbar so the hitch pin hole is directly below the driveline.

   NOTE: If the tractor has a three point hitch, raise the lower links as high as possible, to prevent damage.

5. Attach support (E) for hitch chain to suitable location on tractor drawbar, maximum 6 inches (150 mm) from hitch pin hole. For 36 ft. unit, also note item 7.

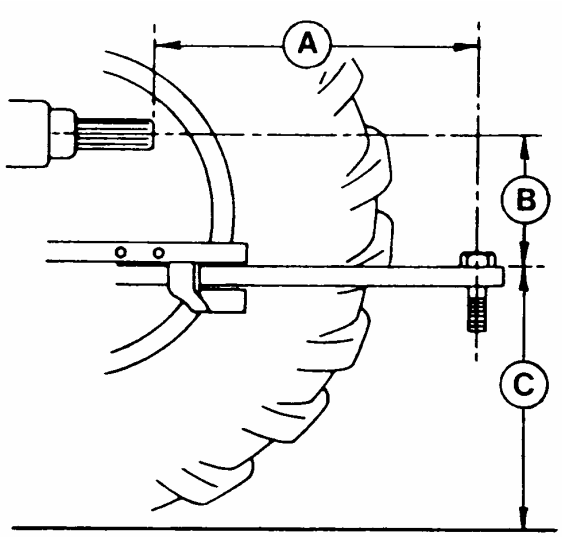

STANDARD DRAWBAR SPECIFICATIONS

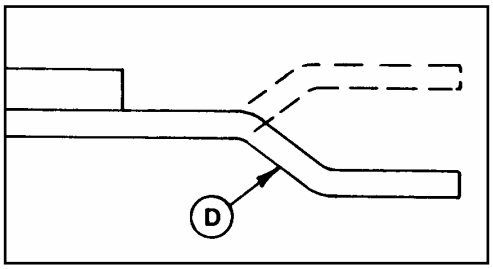

OFFSET TRACTOR DRAWBAR

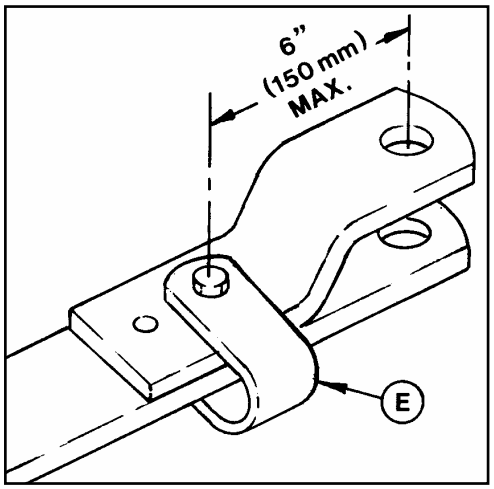

ATTACH SUPPORT FOR HITCH CHAIN

PREPARING THE TRACTOR (continued)

6. Tractor must be equipped with a seven terminal outlet (F) to supply power to the windrower's warning and work lights.

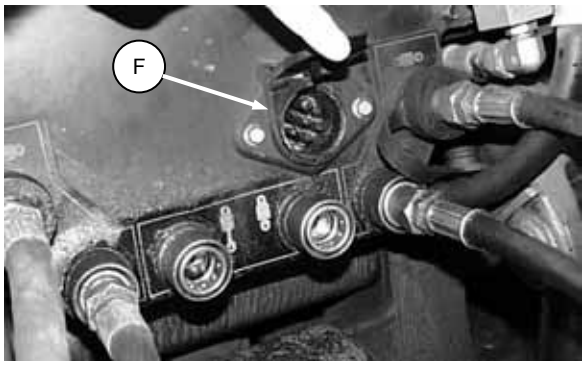

SEVEN TERMINAL ELECTRICAL OUTLET

7. For 36' units only: Attach chain anchor plate (G) to the tractor drawbar as follows:

   - Position plate on drawbar so hitch pin hole lines up with 1-1/4 inch (32 mm) hole in plate at (H).

   - The slotted hole in plate should line up with a second hole in the drawbar at (J). Install 5/8 Grade 5 bolt, washer and locknut at (J).

   NOTE: If slotted hole does not line up with a drawbar hole drill a hole in plate (G) to match drawbar.

   - Some tractor drawbars may require the plate be trimmed to fit. If so. do not leave less than 5 inches (125 mm) width (K) or plate may yield under extreme conditions.

   - If, for any reason, the chain anchor plate cannot be fitted to the tractor drawbar, provision must be made for fastening chain to the tractor frame at the correct location (L). Use the anchor plate as a guide or locate the position by measuring carefully from the hitch pin hole (M).

CAUTION: To avoid injury and/or machine damage, do not shorten the stabilizer chain or attach it further away than the specified 6 in. (150 mm) to the right of the hitch pin hole center line.

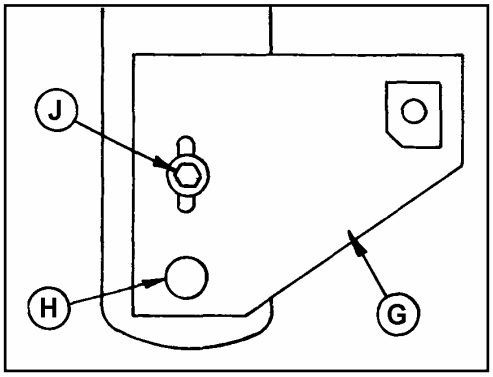

INSTALL CHAIN ANCHOR PLATE - 36'

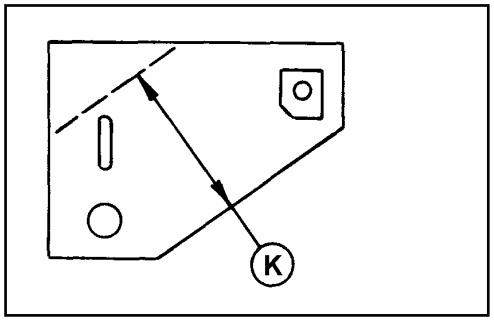

5" (125 mm) MINIMUM WIDTH
IF TRIMMING REQUIRED

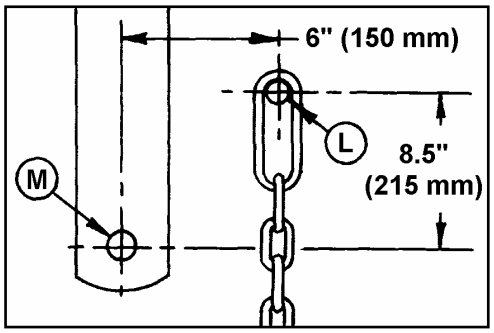

CHAIN PIN HOLE LOCATION
IF PLATE CANNOT BE USED

PREPARING THE WINDROWER

1. Be sure windrower is set up to match tractor PTO speed. A quick way to check is to measure the outside diameter of the driven pulley (A):
   9-1/2 inch (240 mm) - 540 rpm
   12-1/2 inch (320 mm) - 1000 rpm
   If not matched, and tractor PTO speed cannot be varied, order a conversion kit from your windrower dealer. (Kit includes front yoke, decal and instructions.)

IMPORTANT: To avoid machine damage, follow instructions provided in kit for removal of main drive pulley. This procedure is also detailed under "Removal of Main Drive Pulley" in Maintenance/ Service section.

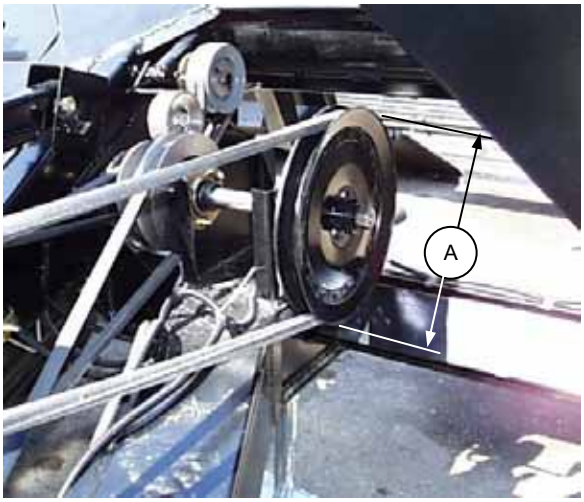

MEASURE PULLEY TO DETERMINE PTO SPEED OPTION

2. Use correct hitch type: For tractors with clevis type drawbar, windrower hitch is compatible without modification. For tractors with straight drawbar, an optional hitch plate (B) is available to convert windrower hitch to clevis type.

   To install:
   - Remove bolt (C) securing hitch chain.
   - Position plate (B) under hitch and replace bolt (C) to secure hitch chain.
   - Install bolt (D) from option kit and secure with locknut.

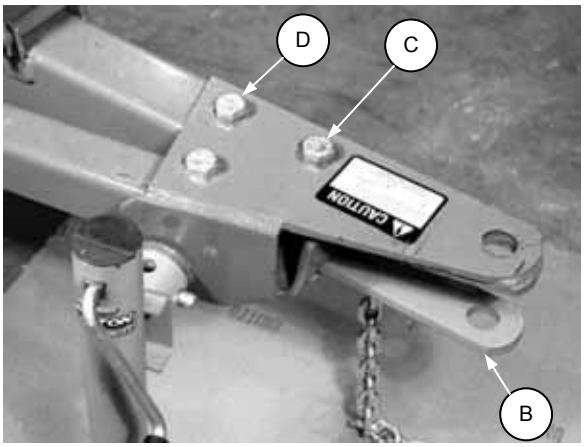

OPTIONAL HITCH PLATE FOR TRACTORS WITH STRAIGHT DRAWBAR

3. With tractor drawbar adjusted to recommendations listed under "Preparing the Tractor", adjust the drive frame vertically at (E) so telescoping driveline (F) is in straight line with tractor PTO.

   NOTE: The telescoping driveline (F) should slide under hand pressure. Grease if required.

4. Install quick coupler tips matching the tractor to be used on the two hydraulic hoses going to the tractor.

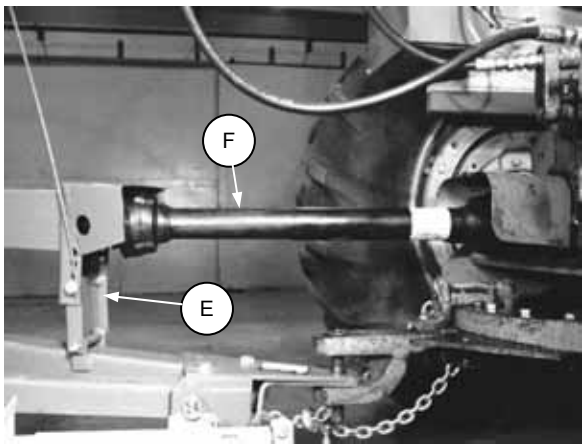

DRIVELINE IN STRAIGHT LINE WITH PTO

PREPARING THE WINDROWER (continued)

5. Check the tires and inflate if necessary. Recommended pressure is 24 to 28 psi (165 to 190 kPa).

CAUTION: When inflating tires, use a clip-on chuck and extension hose long enough to allow you to stand to one side and not facing the tire.

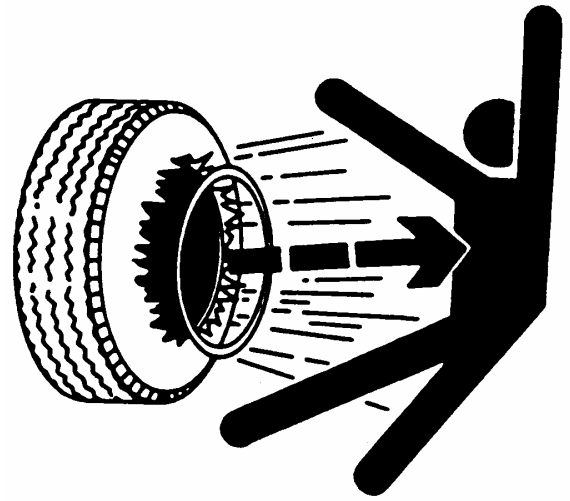

STAND TO ONE SIDE WHEN INFLATING TIRES

6. Check the tension of all belts and adjust if required. See Maintenance/Service section.

7. **IMPORTANT:** Check that main drive belt is properly aligned. Misalignment will result in belt failure. See "Main Drive Belt Alignment" in Maintenance/Service section.

8. Lubricate the machine completely. See Maintenance/Service section.

9. Check for proper assembly and adjustment and make sure all bolts are tightened securely.

10. For 36 ft. units only: Adjust stabilizer stop bolt (G) as follows:
- Position machine as when moving straight ahead in field position. Stabilizer chain (H) will be taut.
- Adjust stop bolt (G) to just contact stabilizer channel (J).

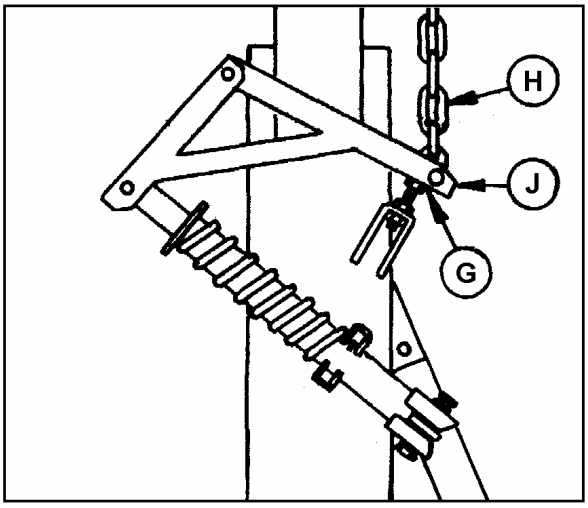

ADJUST STABILIZER STOP BOLT - 36'

ATTACHING WINDROWER TO TRACTOR

CAUTION: Shut off tractor, engage parking brake and remove key before working around hitch.

CAUTION: Never attach windrower to tractor rear axle or three-point hitch arms.

1. Attach windrower hitch to tractor drawbar with a 1-3/16 inch (30 mm) pin and secure with a spring locking pin or other suitable fastener.

CAUTION: To prevent damage to driveline guards, use a drawbar hitch pin with a low head.

NOTE: For 36 ft. units it is especially important to use the largest diameter hitch pin possible, to limit possible rotation of the stabilizer chain anchor plate.

2. Route hitch chain from windrower through chain support (A), around drawbar support and lock hook (B) on chain.

IMPORTANT: Adjust chain length to remove all slack except what is needed for turns.

3. Remove weight from jack. Remove pin (C) and rotate jack to storage position. Replace pin, looping the retaining chain around jack handle to prevent dragging.

4. Pull back spring loaded collar (D) on telescoping driveline yoke and slide collar onto tractor PTO shaft. Release collar, ensuring yoke locks in position on shaft.

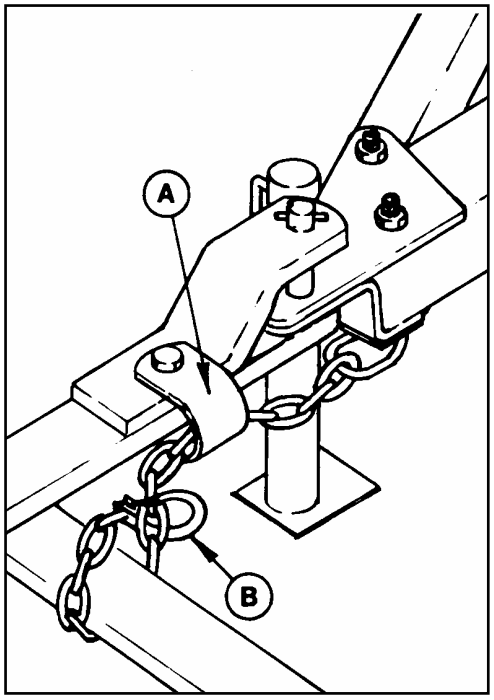

INSTALL HITCH PIN AND CHAIN

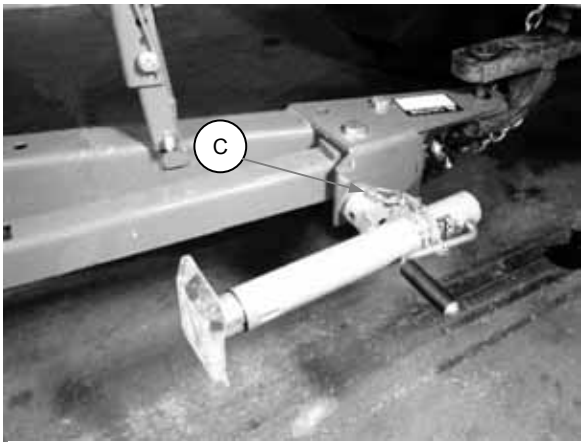

JACK STORAGE

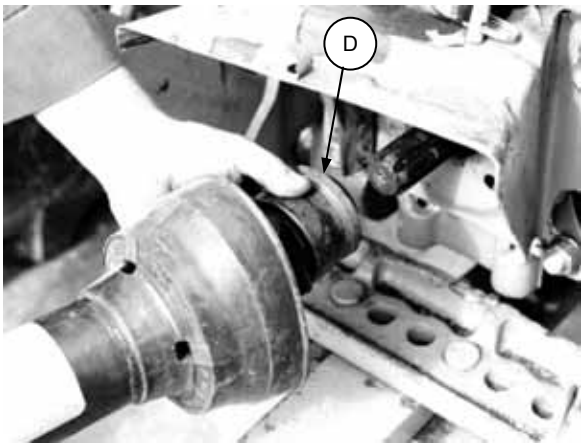

ATTACH DRIVELINE TO PTO

ATTACHING WINDROWER TO TRACTOR
(continued)

5. Connect the windrower wiring harness plug (A) to outlet on tractor.

6. Connect hydraulic hoses to tractor remote cylinder control valves.

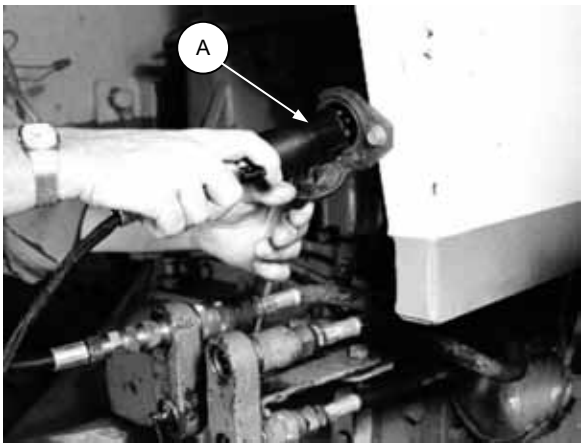

CONNECT WIRING HARNESS

7. For 36 ft. units only: Attach stabilizer chain to tractor-mounted anchor plate as follows:

- Windrower must be in transport position; or, if in field position, tractor must be situated as in a right turn.

- Attach chain (B) to anchor plate, securing with pin (C) and hair pin (D).

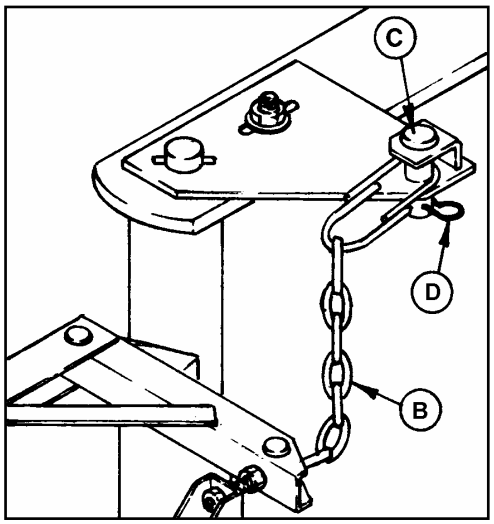

ATTACH STABILIZER CHAIN - 36 ft.

DETACHING WINDROWER FROM TRACTOR

CAUTION: To prevent accidental movement of tractor, shut off engine, engage parking brake, and remove key.

To maintain stability, always lower the reel and cutterbar completely. Block windrower wheels before detaching from tractor.

Park machine on flat level surface.

Move remote cylinder control valve lever back and forth to relieve stored hydraulic pressure.

CAUTION: For 36 ft. units, windrower must be in transport position; or, if in field position, tractor must be situated as in a right turn to relax stabilizer spring and slacken chain.

1. Remove pin (A) and rotate jack to upright position. Replace pin, allowing jack handle to swing freely.
2. Lower jack to take weight off tractor drawbar.
3. Pull back spring loaded collar (G) on telescoping driveline yoke and remove yoke from tractor PTO shaft.
4. Disconnect hydraulic hoses and electrical harness. Store in holes provided in drive frame.

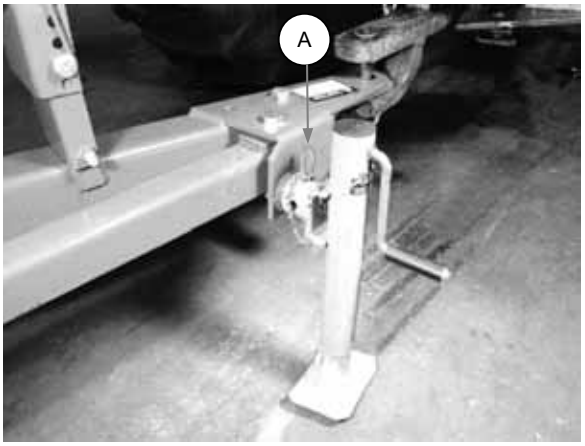

LOWER JACK

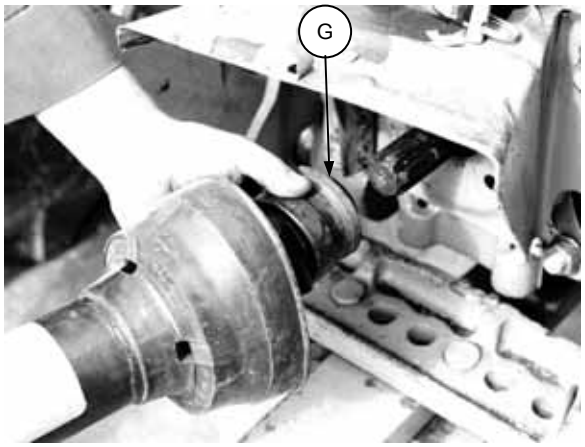

DETACH DRIVELINE

STORE HOSES AND WIRING HARNESS

DETACHING WINDROWER FROM TRACTOR
(continued)

5. Remove hitch pin (B) and unhook chain (C) from tractor. Wrap chain around windrower hitch for storage.

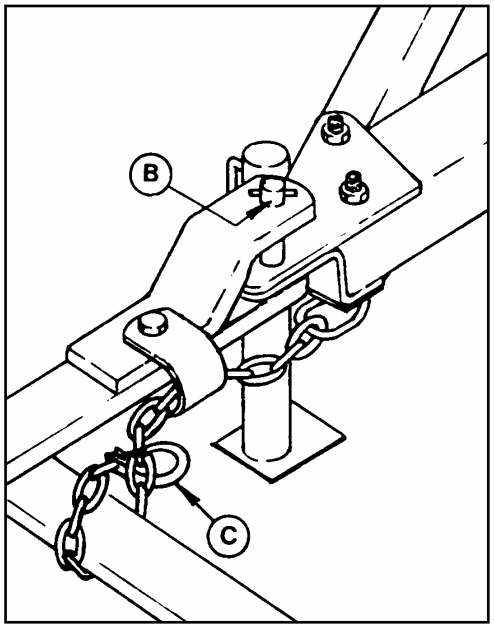

REMOVE HITCH PIN AND CHAIN

6. For 36 ft. units only: Disconnect stabilizer chain (D) from tractor, storing pins (E) and (F) in position.

7. Slowly drive tractor away from windrower.

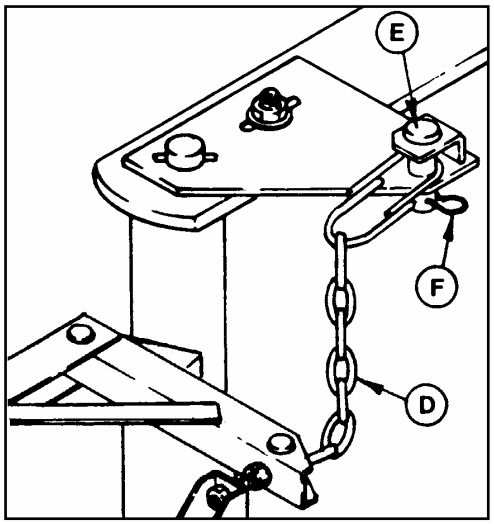

DISCONNECT STABILIZER CHAIN - 36 ft.

BREAK-IN PERIOD

1. After attaching windrower to tractor for the first time, operate the machine slowly for 5 minutes, watching and listening FROM THE TRACTOR SEAT for binding or interfering parts.

CAUTION: Before investigating an unusual sound or attempting to correct a problem, shut off tractor, engage parking brake and remove key.

2. Check all belts after 5 hours operation for initial stretch. Tighten as necessary. (See Maintenance/Service section). Continue to check the belts periodically for the first 50 hours.

3. Check wheel bolt torque after 10 hours operation and periodically thereafter (at least every 100 hours). Torque to 80 to 90 ft.lbs. (110 to 120 N·m)

4. Check that the two setscrews securing driveline yoke to main drive shaft at (A) are tight after 10 hours operation.

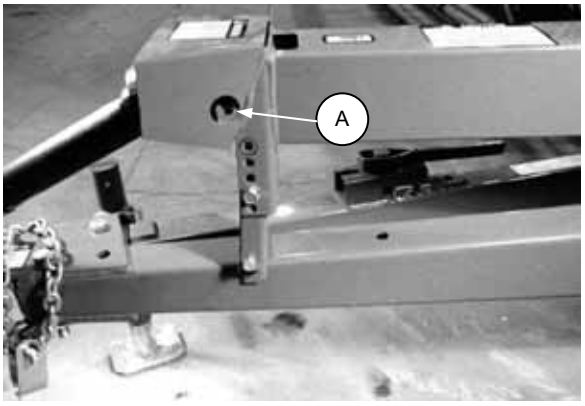

CHECK YOKE - DRIVE SHAFT SETSCREWS

5. Check locknuts (B) after 10 hours operation. Torque to 80 to 90 ft.lbs. (110 to 120 N·m). Also check that top idler pulley is properly aligned with drive pulley. See "Main Drive Belt Alignment" in Maintenance/Service section

6. Check sickle drive after 10 hours operation for loose bearings and/or bolts.

7. Check reel and draper drives after 10 hours operation for proper alignment and heated bearings.

8. Until you become familiar with the sound and feel of your new windrower, be extra alert and attentive.

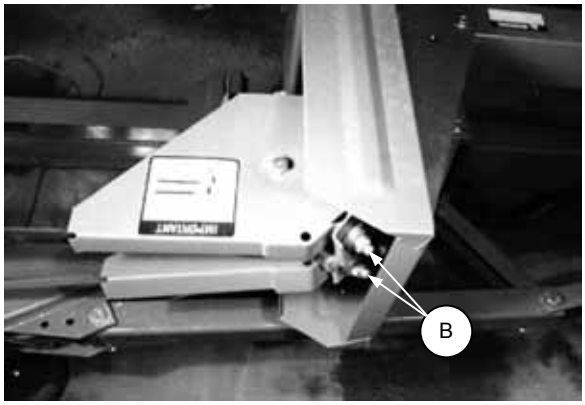

CHECK IDLER BRACKET LOCKNUTS
AND BELT ALIGNMENT

PRE-STARTING CHECKS

Do the following at the start of each operating season:

CAUTION:

1. **Review the Operator's Manual to refresh your memory on safety and operating recommendations.**

2. **Review all safety signs and other decals on the windrower and note hazard areas.**

3. **Be sure all shields and guards are properly installed and secured. Never alter or remove safety equipment.**

4. **Be sure you understand and have practised safe use of all controls. Know the capacity and operating characteristics of the machine.**

5. **Check the first aid kit and fire extinguisher. Know where they are and how to use them.**

Also:

6. Install drapers. See "Drapers" in Maintenance/ Service section.

7. Adjust tension on drive belts and drapers. See Maintenance/Service section.

8. Perform all Annual maintenance. See Maintenance/Service section.

PRE-STARTING CHECKS

Do the following each day before start-up:

CAUTION:

1. **Clear the area of other persons, pets etc. Keep children away from machinery. Walk around the windrower to be sure no one is under, on or close to it.**

2. **Remove foreign objects from the machine and surrounding area.**

3. **Wear close fitting clothing and protective shoes with slip resistant soles.**

   As well, carry with you any protective clothing and personal safety devices that COULD be necessary through the day. Don't take chances.

   You may need:
   - a hard hat
   - protective glasses or goggles
   - heavy gloves
   - respirator or filter mask
   - wet weather gear.

4. **Protect against noise. Wear a suitable hearing protective device such as ear muffs or ear plugs to protect against objectionable or uncomfortable loud noises.**

5. **Check the machine for leaks or any parts that are missing, broken, or not working correctly.**

   NOTE: Use proper procedure when searching for pressurized fluid leaks. See "Hydraulics" in Maintenance/Service section.

6. **Be sure tractor and windrower are properly attached, all controls are in neutral and tractor brake is engaged.**

7. **Clean all lights and reflective surfaces on the machine. Check lights for proper operation.**

8. Apply draper tension by rotating tension levers (A) towards center of drapers.

9. Perform all Daily maintenance. See Maintenance/Service section.

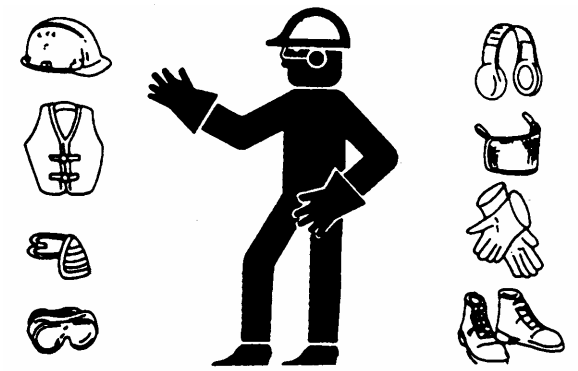

PROTECT YOURSELF

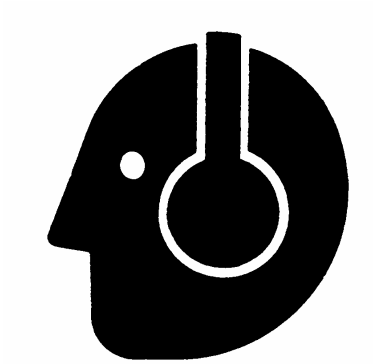

PROTECT AGAINST NOISE

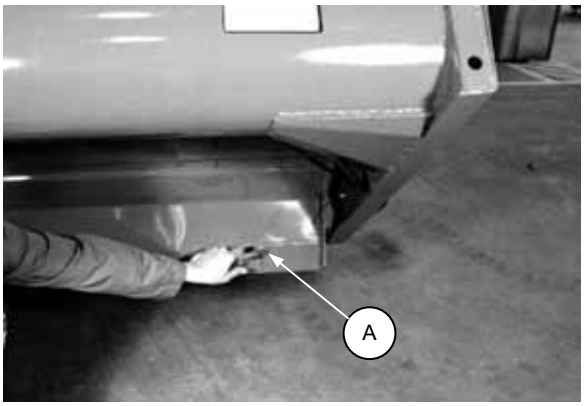

APPLY DRAPER TENSION

OPERATION

OPERATE CORRECTLY

CAUTION:

1. **Follow all safety and operational instructions given in your tractor Operator's Manual. If you do not have a tractor manual, get one from your dealer and read it thoroughly.**
2. **Never attempt to start the tractor engine or operate the windrower except from the tractor seat.**
3. **Check the operation of all controls in a safe clear area before starting work.**
4. **Do not allow riders on tractor or windrower.**
5. **Never start or move the machine until you are sure all bystanders have cleared the area.**
6. **Avoid travelling over loose fill, rocks, ditches or holes.**
7. **Drive slowly through gates and doorways.**
8. **Reduce speed when turning, crossing slopes, or when travelling over rough ground.**
9. **When working on inclines, travel uphill or downhill when possible. Be sure to keep tractor transmission in gear when travelling downhill.**
10. **Never attempt to get on or off a moving tractor.**
11. **Do not get off the tractor while the windrower is in operation.**
12. **Stop tractor engine and remove key before adjusting or removing plugged material from the machine. A child or even a pet could engage the drive.**
13. **Check for excessive vibration and unusual noises. If there is any indication of trouble, shut down and inspect the machine. Follow proper shut-down procedure:**
    - engage tractor brake
    - disengage PTO
    - turn off engine and remove key
    - wait for all movement to stop
    - dismount and engage cylinder stops before inspecting raised machine.

IMPORTANT: Satisfactory function of the windrower in all situations requires making proper adjustments to suit various crops and conditions.

Correct operation reduces crop loss and allows cutting of more acres. As well, proper adjustments and timely maintenance will increase the length of service you receive from the machine.

ENGAGING THE PTO

DANGER: Be sure all bystanders are clear of the machine before engaging the PTO. Never leave tractor seat with the PTO engaged. Entanglement with rotating driveline will cause serious injury or death.

CLEAR THE AREA BEFORE ENGAGING PTO

- Engage the PTO slowly, just before the windrower is moved up to the standing crop. Engage PTO only when tractor is angled less than 45° to driveline.
- Be sure tractor PTO speed and windrower drive are matched. See "Preparing the Windrower" in this section.
- Disengage the PTO when not operating the windrower.

CUTTING WIDTH

Unless combine capacity is a limiting factor, run the left side of the header close to the edge of the standing crop, taking a full cut. If a full width windrow will overload your combine, cut less than a full windrower width. Overloading the combine means wasted crop, high fuel consumption, and possible repair bills.

RIGHT HAND DIVIDER ROD

The divider rod (A) can be angled in or out to provide proper separation and clean entry in a variety of crops. To change angle; loosen hardware, move rod to desired position and tighten hardware.

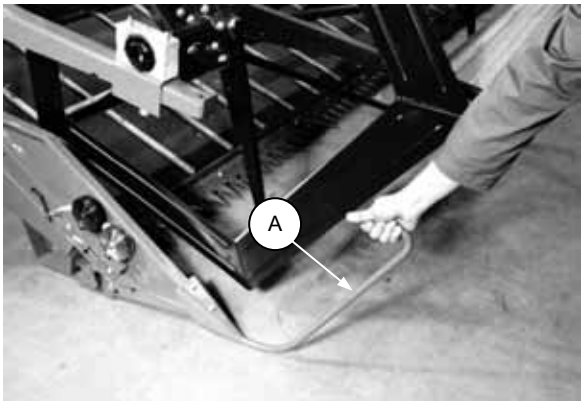

RIGHT DIVIDER ROD ADJUSTMENT

HEADER LOCK

WARNING: To avoid bodily injury or death from fall of raised machine, always engage header lock (A) before going under windrower for any reason.

NOTE: Should the condition arise where the lock pin cannot be installed with the header fully raised, install shim washers between bracket (B) and stop (C).

When not in use, store pin at (D).

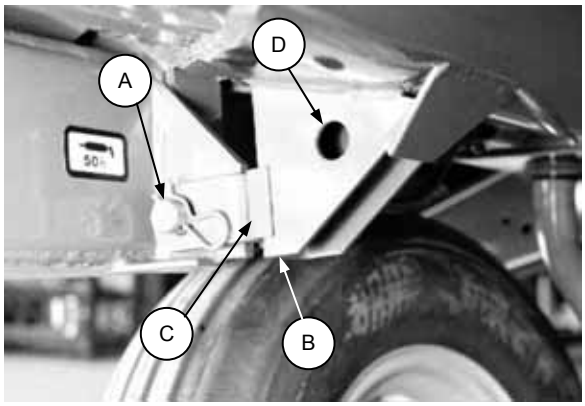

HEADER LOCK - ENGAGED

CUTTING HEIGHT

IMPORTANT: Avoid raising header to full height when in field position. Right wheel may rotate into transport position.

The windrow should normally be laid on stubble from 6 to 8 inches high (150 to 200 mm).

Benefits of a stubble of this height:
- Allows free circulation of air under the windrow for more even drying.
- Supports the windrow without bending.
- Keeps grain heads from contacting ground. Heads that touch the ground are difficult to pick up and will sprout in damp weather.

Cutting height is controlled from the tractor with remote cylinder control valve lever.

Minimum Header Height

The header lift cylinder has an adjustable stop to vary minimum header height. To adjust:

1. **WARNING: To avoid bodily injury or death, raise header fully and engage header lock.**

2. Turn stop (E) towards cylinder barrel to raise minimum height.

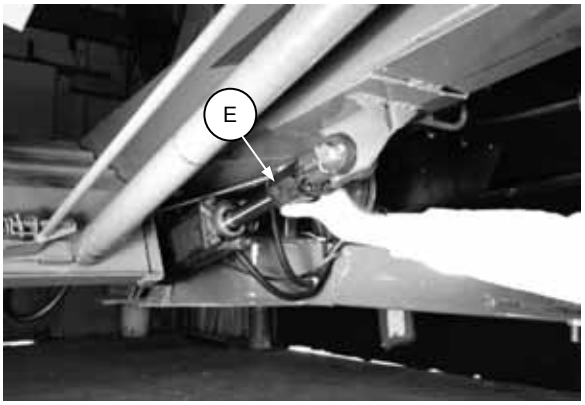

MINIMUM HEADER HEIGHT ADJUSTMENT

GROUND SPEED

CAUTION: Reduce speed when turning, crossing slopes, or when travelling over rough ground.

Tractor ground speed should not exceed 8 mph (13 km/h). For most crop conditions a ground speed of 5 mph (8 km/h) has been found satisfactory.

Choose a ground speed that allows the sickle to cut the crop smoothly and evenly, while giving the desired windrow formation.

NOTE: Ground speed affects the orientation of stalks in the windrow. Increasing ground speed will cause the configuration of the windrow to go from parallel formation to herringbone or dovetail. See "Windrow Characteristics" in this section.

As ground speed is increased, draper and reel speed should be increased to handle the extra material.

The chart below indicates the relationship between ground speed and area cut for each windrower size. Example (see arrows below): At ground speed of 5 mph (8 km/h), a 36 ft. windrower will cut approximately 22 acres (9 hectares) per hour.

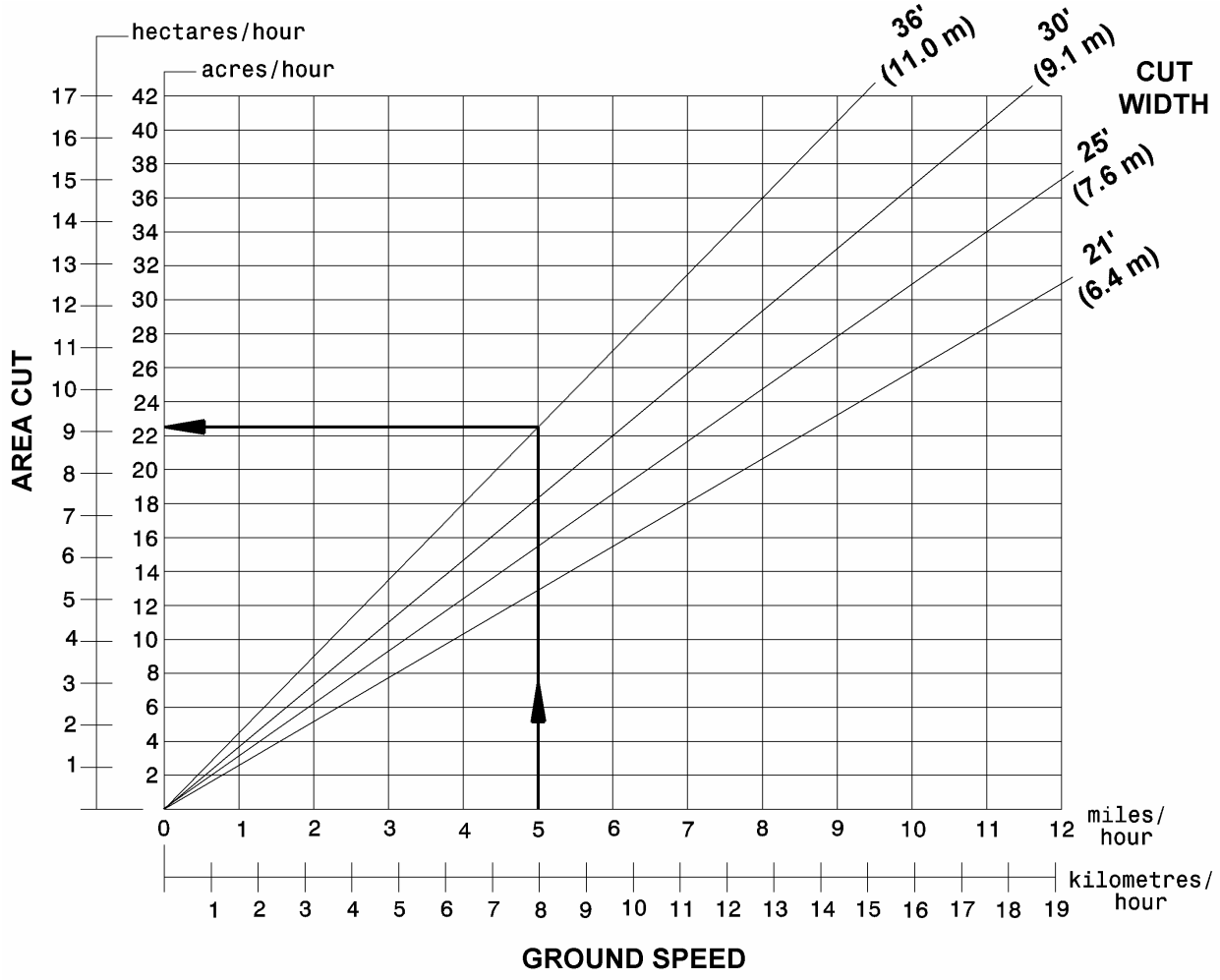

REEL SPEED

Reel speed affects the smoothness and evenness of the windrow. Operating the reel too fast or too slow relative to ground speed will cause bunching in the windrow.

In standing crop, reel speed should be just faster than ground speed to sweep the crop across the sickle.

A faster reel speed may be necessary in leaning or down crop.

Excessive shattering of grain heads may be an indication that reel speed is too fast.

Reel speed is variable from 27 to 50 rpm, over two speed ranges.

To adjust speed within a range:

1. To reduce speed, move shims at (A) from outside to between pulley halves.

2. To increase speed, remove shims from between halves and store outside pulley.

To change speed range, replace outer pulley half (B) as follows:

1. Remove nut (C), shims at (A) and outer pulley half (B).

2. Remove pulley half (D) under main drive shield and store the pulley half removed in Step 1.

3. Install new pulley half on drive shaft, position shims as required, and secure with nut.

NOTE: The smaller diameter pulley half is used for the low speed range. The larger diameter pulley half is used for the high speed range.

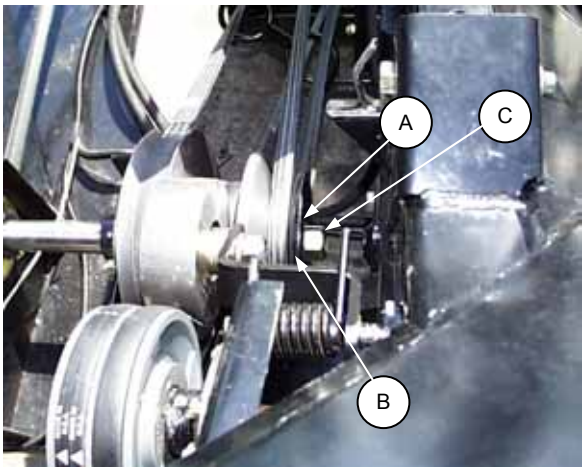

REEL SPEED ADJUSTMENT

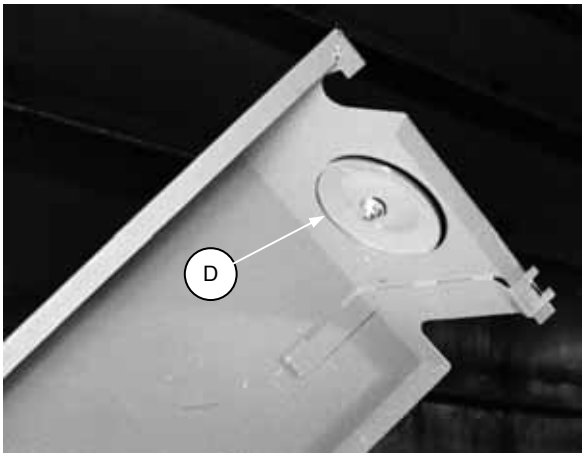

STORAGE OF PULLEY HALF

REEL PROPS

WARNING: To avoid injury from fall of raised reel, always engage reel props (A) before going under raised reel for any reason.

Keep pivot bolt properly tightened so prop remains in stored position when not in use, yet can be engaged with hand force.

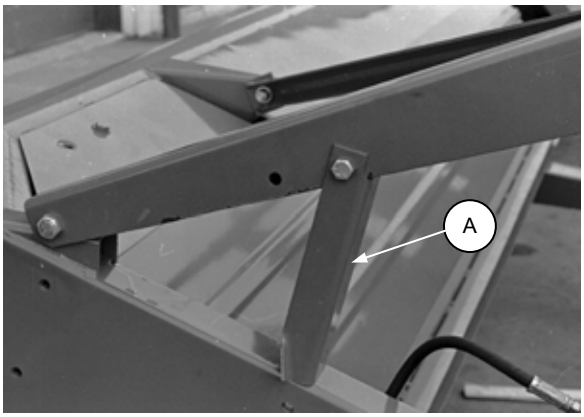

REEL PROP - ENGAGED

36 foot units only:

To engage center reel arm lock pin, raise reel and install pin at (B). Secure with hair pin.

When not in use, store pin at (C).

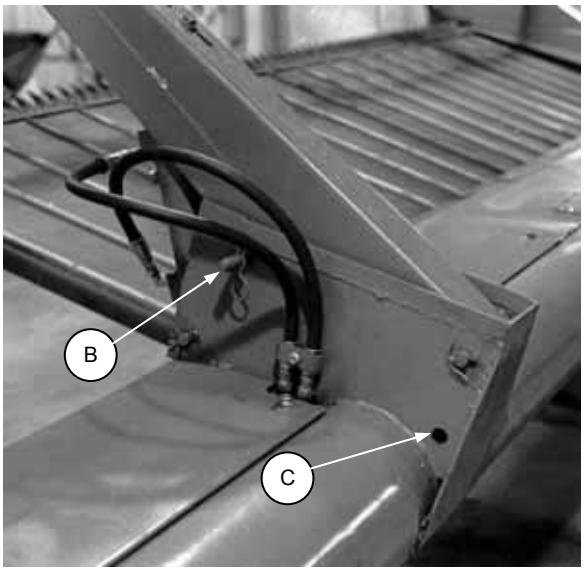

CENTER SUPPORT ARM LOCK PIN
36 ft. UNIT - ENGAGED

REEL HEIGHT

Reel height is controlled from the tractor with remote cylinder control valve lever. Depending on crop height, adjust reel height to carry the material through the sickle onto the drapers.

Down crop will require a lower reel height while bushy crop may require raising the reel to prevent unevenness in the windrow.

REEL POSITION - FORE & AFT

Reel fore-aft position can be adjusted to suit various crop conditions:

For straight standing crop, the reel position is normally centered above the cutterbar.

For crops that are down, tangled, or leaning, move reel ahead of cutterbar.

Bushy crops require positioning the reel behind the cutterbar, applying downward force on the crop and drapers.

To adjust the fore-aft position of the reel:

1. Position reel height so support arms (A) are horizontal.
2. Loosen locknut (B) at left support arm.
3. Loosen jam nut and positioning screw (C) under each support arm.
4. Slide the reel to desired position. A pry bar may be used in hole (G).

NOTE: Positioning screw (C) must be in the same hole on each support arm (A).

5. Tighten positioning screw (C), then tighten jam nut at each support arm.
6. Tighten locknut (B) at left support arm.
7. Check that reel drive idler arm (D) is properly positioned:
   Idler position (E) - Reel in any of the three forward positions.
   Idler position (F) - Reel in any of the three rearward positions.

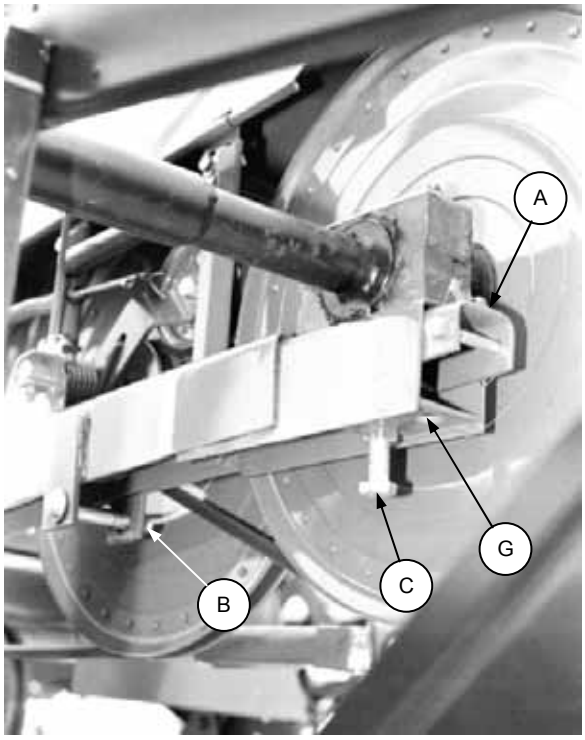

REEL FORE-AFT POSITION ADJUSTMENT

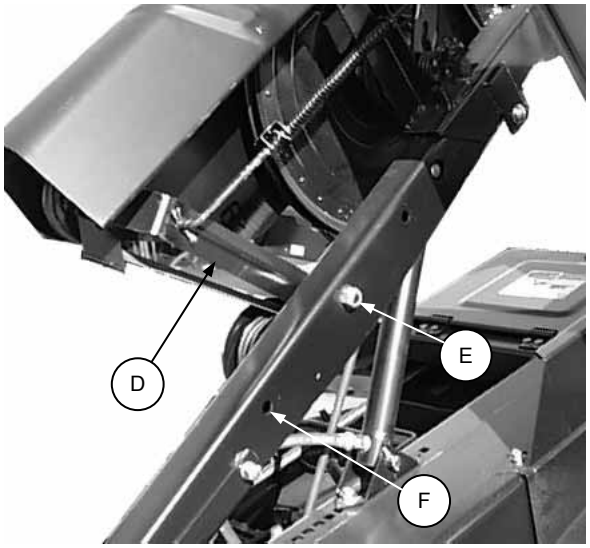

REEL DRIVE IDLER ARM POSITION

DRAPER SPEED

Draper speed affects the orientation of stalks in the windrow. Faster draper speeds will tend to form herringbone or dovetail configurations. See "Windrow Characteristics" in this section.

Draper speed is variable from 275 to 480 feet per minute (84 to 146 m/min) by shimming. One shim will change draper speed approximately 19 feet per minute (6 m/min)

To increase speed, add more shims between pulley halves.

To decrease speed, remove shims from between pulley halves.

To change draper speed:

1. Remove four bolts, shims (A) and outer pulley half (B) at draper drive roller.
2. Reposition shims as required.
3. Replace pulley half, shims and bolts. Store unused shims outside pulley.
4. Tighten hardware.

NOTE: When a slower draper speed is required even after removing all shims at draper drive roller pulley, add shims between pulley halves (C) on drive shaft. However, for maximum belt life, extended use of shims at pulley (C) is not recommended. When increasing speed, always remove any shims at (C) first.

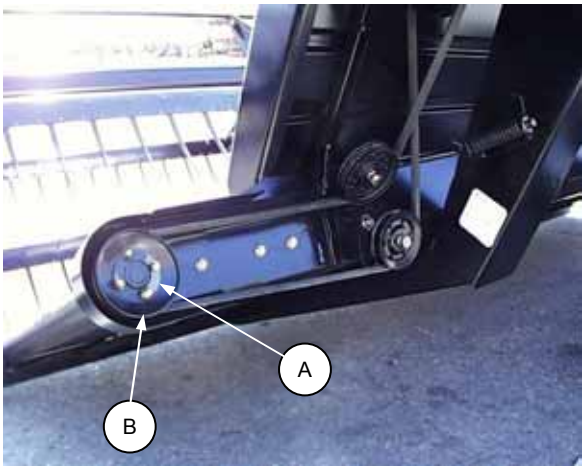

DRAPER SPEED ADJUSTMENT

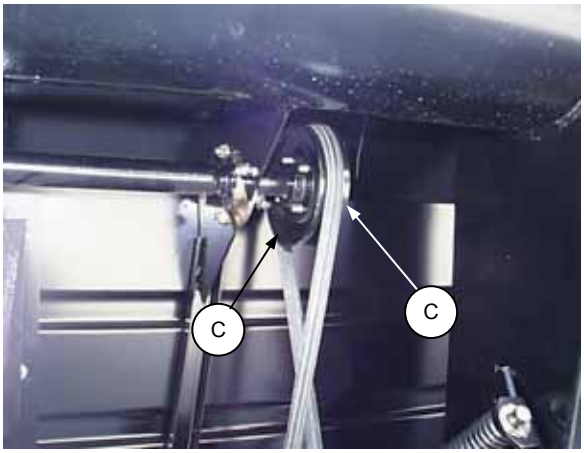

DRIVE SHAFT PULLEY

DELIVERY OPENING WIDTH

The width of the delivery opening affects the width and configuration of the windrow. The decision to widen or narrow the opening should be based on the following factors:
- Combine pick-up capability
- Weather conditions (rain, humidity, wind)
- Drying time available

See "Windrow Characteristics" in this section for the strengths and weaknesses of the various windrow configurations with respect to these factors.
The 21, 25 and 30 ft. windrowers are factory assembled with a delivery opening of 53 inches (1345 mm).

To widen opening - 21, 25 & 30 ft. units:

1. Remove screws from connector slat of right hand draper.
2. Remove right hand draper drive belt. See "Draper Drive Belts" in Maintenance/ Service section.
3. Remove right draper track extension. Remove roller support from extension. Store extension on right leg of windrower.
4. Reinstall roller support (B) without extension.
5. Remove hardware securing drive roller at cutterbar. Move roller (C) to bracket (D). Adjust so roller (C) is perpendicular to cutterbar (E).
6. Re-connect draper at new length and cut off excessive flap.
7. Install shorter drive belt provided.
8. Adjust draper tracking. See Maintenance/ Service section.

To narrow opening - 21, 25 & 30 ft. units:

1. Obtain "Narrow Opening Option Package" from your dealer.
2. Remove screws from connector slat of left draper.
3. Add the 15 inch (380 mm) long extension (from option package) to the draper.
4. Remove left hand draper drive belt. See "Draper Drive Belts" in Maintenance/Service section. Install longer belt (from option package) on drive shaft pulley.
5. Remove left roller support. Attach extensions (A) from option package and reinstall roller support (B).
6. Remove hardware securing drive roller at cutterbar. Move roller (C) to bracket (D). Adjust so roller (C) is perpendicular to cutterbar (E).
7. Reconnect draper and install longer belt on drive roller pulley.
8. Adjust draper tracking. See Maintenance/ Service section.

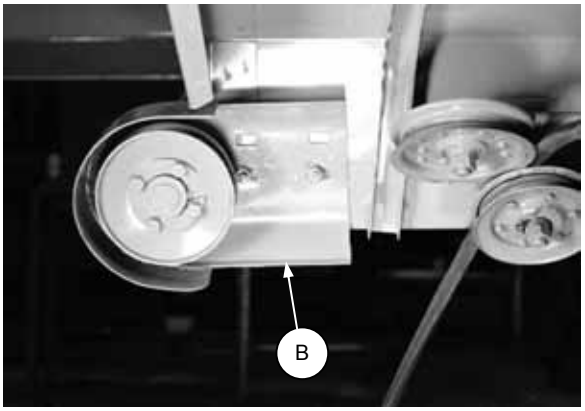

REMOVE RIGHT EXTENSION, REINSTALL ROLLER SUPPORT, CHANGE BELT

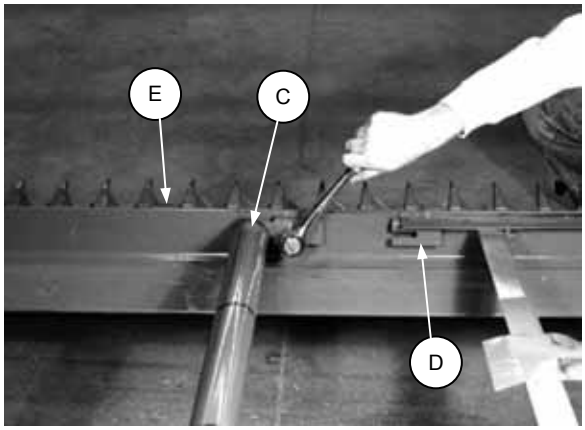

REPOSITION ROLLER AT CUTTERBAR

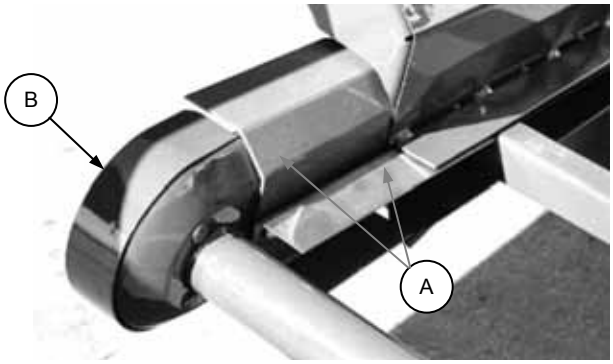

INSTALL DRAPER TRACK EXTENSIONS

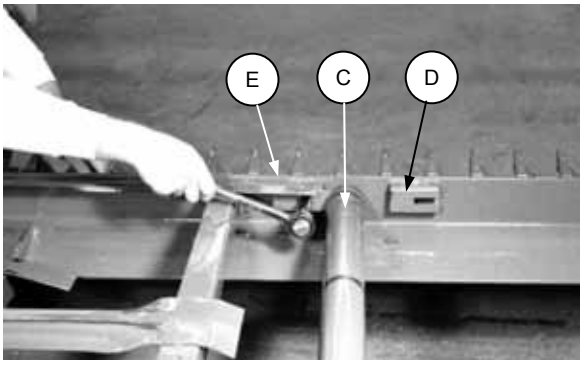

REPOSITION ROLLER AT CUTTERBAR

DELIVERY OPENING WIDTH (continued)

The 36 ft. windrower is factory assembled with a delivery opening of 60-3/4 inches (1545 mm).

To widen opening - 36 ft. unit

1. Remove screws from connector slat of left draper.
2. Remove two bolts (B) near left leg of windrower.
3. Remove bolt (C) at cutterbar.
4. Push telescoping draper track to desired position.
5. Install bolts (B) and (C).
6. Re-connect draper at new length and cut off excessive flap.
7. Adjust draper tracking if necessary. See Maintenance/Service section.

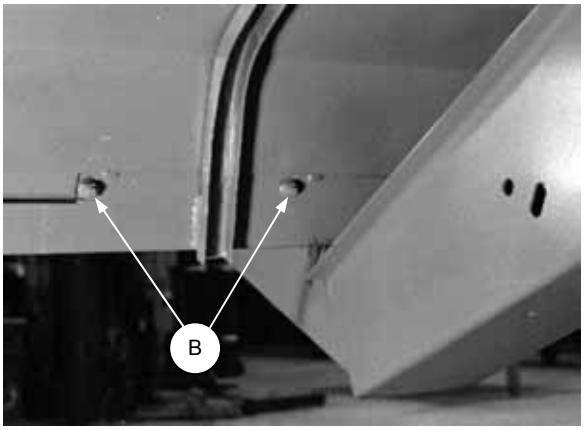

REMOVE BOLTS AT REAR TRACK

To narrow opening - 36 ft. unit

1. Remove screws from connector slat of left draper.
2. Add a 15 inch (380 mm) long extension (available as a repair part) to the draper. Working from the factory set position, this results in an opening width of 52-3/4 in. (1340 mm).
3. Remove two bolts (B) near left leg of windrower.
4. Remove bolt (C) at cutterbar.
5. Pull telescoping draper track out to desired position.
6. Install bolts (B) and (C).
7. Re-connect draper.
8. Adjust draper tracking if necessary. See Maintenance/Service section.

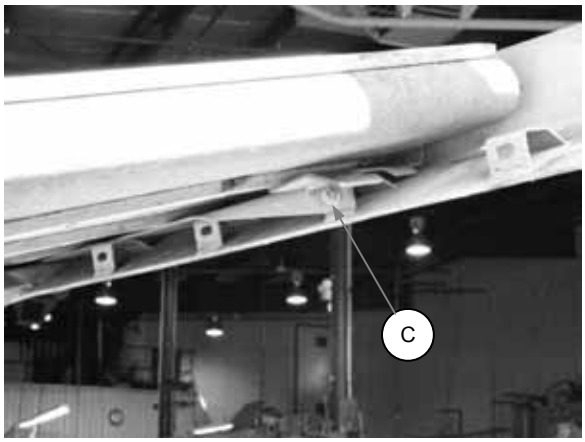

REMOVE BOLT AT CUTTERBAR

WARNING: Header raised for photographic purposes. If adjusting delivery opening with header raised, first engage header lock.

DELIVERY OPENING HEIGHT

Height of the frame tube can be adjusted within a 6” (150 mm) range by repositioning the caster wheel spindle on the supports. A lower frame tube height gives a flatter draper/guard angle, while higher frame tube heights are beneficial in bulky crops.

Adjust delivery opening height as follows:

1. Place jack at left or right end as shown.

BLOCK HEIGHTS:

L/H side – A 6” (150 mm) block (four 2x4’s) is required under jack to raise to highest setting. **NOTE:** When going from highest to lowest position, a 6” block under jack is too high to reach lowest position. Move in stages as follows:

- Use a 6” block to move from high to mid position.
- Lower onto wheel and remove one 2x4 to leave a 4-1/2” block.
- Jack up again and move from mid to low setting.

R/H side – A 4-1/2” (115 mm) block (three 2x4’s) is adequate for all adjustments.

2. Remove four bolts and reposition spindle on caster as desired. **NOTE:** Spindle hangs on caster on a welded stud, so weight of wheel does not need to be supported as adjustment is made. Tighten bolts to 80 ft.lbs. (110 N·m).

NOTE: Factory assembly of casters is in a lower clearance position, with rounded end of bracket up as at (A). For highest settings, turn spindle bracket 180°, so rounded end is down as at (B).

3. Repeat at other end. See Levelling the Cutterbar, below.

Levelling the Cutterbar

In field position, the right end of the cutterbar should be 1 to 3 inches (25 to 75 mm) higher than the left end to accommodate the weight of the grain on the drapers when windrowing.

L/H SPINDLE BRACKET – FACTORY SETTING

LEFT WHEEL JACK POSITION – WHEEL SHOWN IN RAISED POSITION

RIGHT WHEEL JACK POSITION

WINDROW CHARACTERISTICS

Factors such as ground speed, reel speed, draper speed and delivery opening will all affect the resulting windrow. You will quickly become adept at adjusting these variables to achieve the desired results.

NOTE: Crop condition is a major factor in forming a good windrow. While standing or uniformly leaning crops can generally be easily formed into an acceptable windrow, such is not the case when stalks are tangled or leaning in several directions.

There are three basic criteria by which the quality of a windrow is measured:
1. Weight Distribution - heads and stalks distributed evenly across full width of windrow.
2. Good Curing - a loose, open windrow for better drying.
3. Good Weatherability - a well formed windrow that supports heads off the ground and holds together in extreme weather conditions.

HERRINGBONE WINDROW

The most desirable form of windrow, stalks are crossed and interwoven. Heads are distributed across full width of windrow. Windrow rating:

Weight Distribution: Good
Curing Characteristics: Good
Weatherability: Excellent

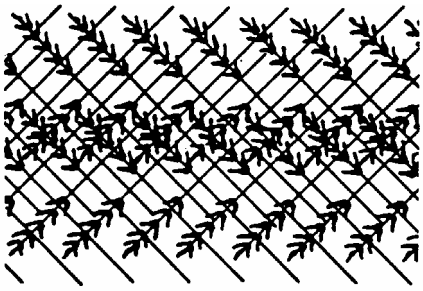

HERRINGBONE WINDROW

FANTAIL WINDROW

The stalk tips are crossed in the center and heads are in line along outside edges. Windrow rating:

Weight Distribution: Fair
Curing Characteristics: Fair
Weatherability: Fair

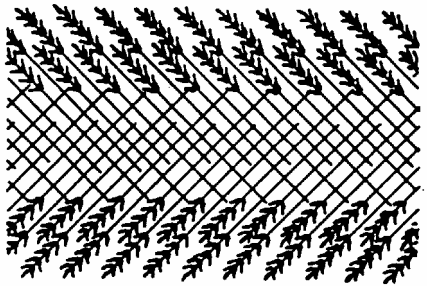

FANTAIL WINDROW

DOVETAIL WINDROW

The stalk tips are lined along outside edges of windrow and heads are crossed in center. Windrow rating:

Weight Distribution: Poor
Curing Characteristics: Fair
Weatherability: Poor

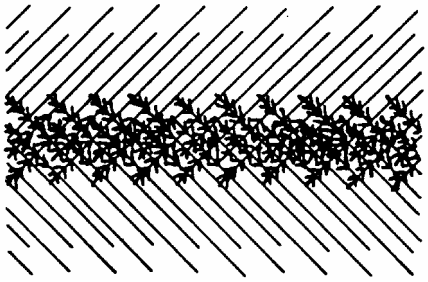

DOVETAIL WINDROW

PARALLEL WINDROW

The stalks are parallel to windrow and heads evenly distributed across width of windrow. Windrow rating:

Weight Distribution: Good
Curing Characteristics: Good
Weatherability: Good

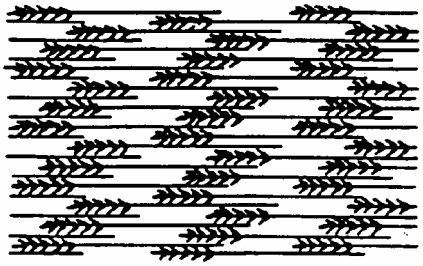

PARALLEL WINDROW

CORNERING

Because of the long turning radius of the larger windrowers (especially 36 ft.), use the cornering procedure illustrated.

This procedure will prevent swath disturbance and grain loss caused by tractor and/or windrower tires. In addition, the technique should result in a corner that can be picked up by your combine without extra turning.

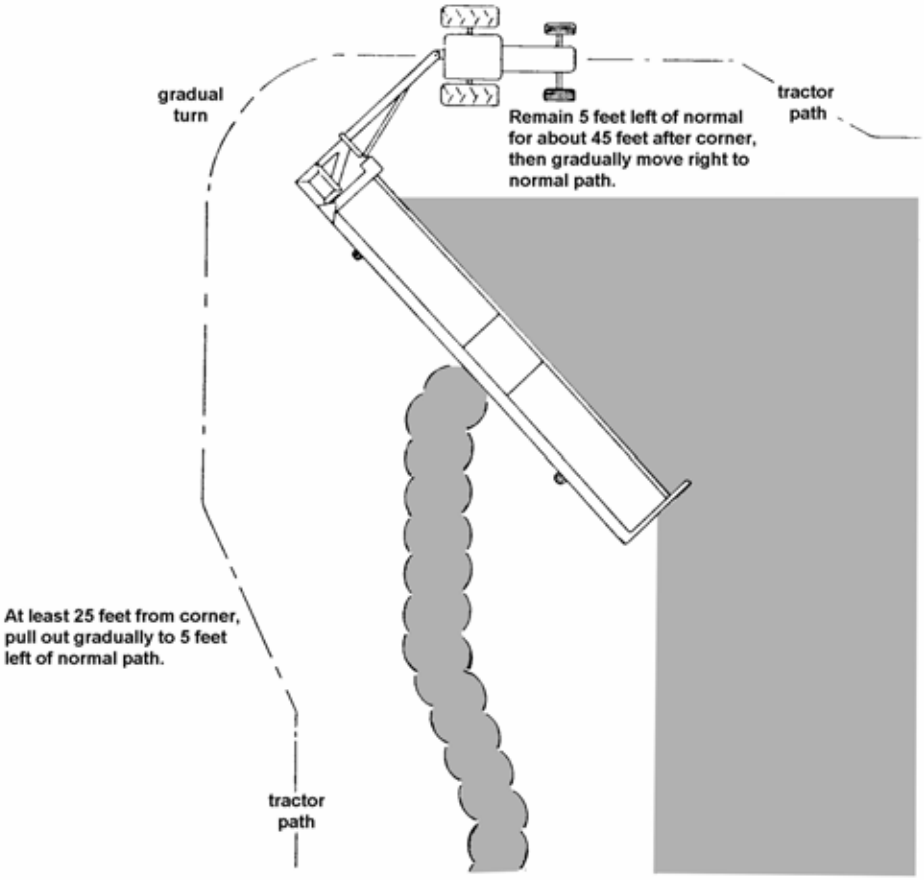

FIELD LIGHT

The field light (A) is positioned to shine on the windrow when cutting after dark.

CAUTION: Do not turn work light on when transporting the windrower on roadways. Other drivers may be confused by its position.

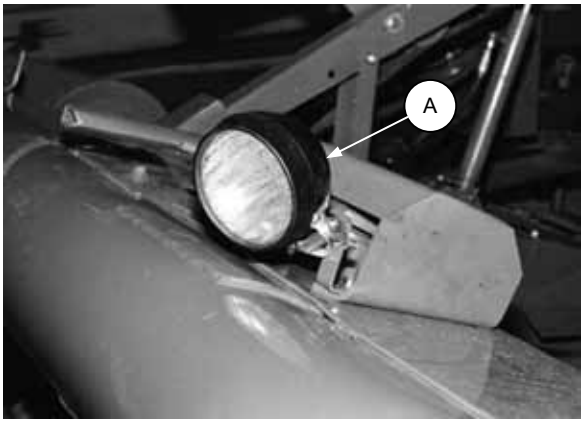

FIELD LIGHT

UNPLUGGING THE SICKLE

WARNING: Stop tractor engine and remove key before removing plugged material from sickle. A child or even a pet could engage the drive.

If the sickle plugs:

1. Stop forward movement of the tractor.
2. Lift the cutterbar about 12 inches (300 mm).
3. Back up about 3 feet (1 metre) with PTO engaged.
4. If the plug does not clear; disengage PTO, shut off engine, remove key and lock tractor brakes.
5. Using bar through hole (A), manually work sickle back and forth to loosen plugged material.

WARNING: Wear heavy gloves when working around sickle.

6. Clean off cutterbar by hand.

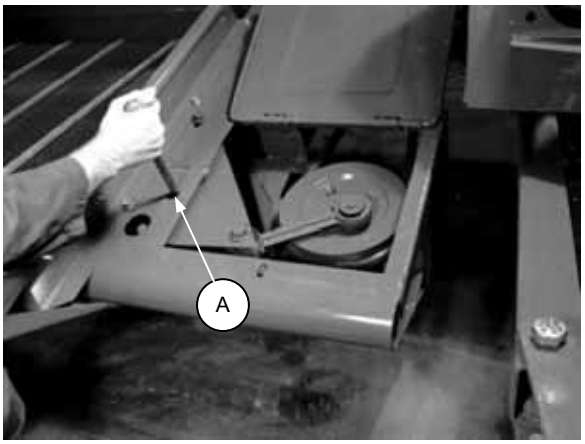

CLEARING PLUGGED SICKLE

SHUT-DOWN PROCEDURE

CAUTION: Before leaving the tractor seat for any reason:

1. **Park on level ground if possible.**
2. **Lower the header and reel fully.**
3. **Place all controls in NEUTRAL or PARK.**
4. **Disengage PTO.**
5. **Engage the park brake.**
6. **Stop engine and remove key from ignition.**
7. **Wait for all movement to stop.**
8. **Lock tractor anti-vandalism covers and closures when leaving the machine unattended.**

9. Release draper tension at the end of the day's operation by using hand or foot to move lever (B) over-center.

CAUTION: Spring loaded over-center action causes handle to kick back when tension is released. To avoid possible injury, do not hold lever when releasing tension.

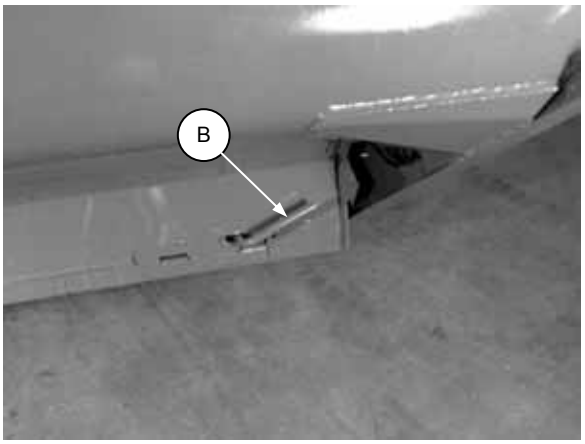

RELEASE DRAPER TENSION

TRANSPORTING THE WINDROWER

CAUTION: Use correct transport procedure as detailed here:

1. Be sure all lock pins are properly installed in transport position. See "Converting From Field Position to Transport" in this section.

2. To ensure adequate braking performance and control, tow only with a vehicle weighing at least 5000 lbs. (2300 kg).

3. Be sure hitch chain is properly attached to towing vehicle. Provide only enough slack in chain to permit turning. See "Attaching Windrower to Tractor" in this section.

4. To avoid loss of control in turns, be sure there is at least 4 inches (100 mm) clearance (A) from hitch pin to rear of towing vehicle.

5. Disengage PTO before transporting. Be sure driveline is properly attached to tractor PTO. See "Attaching Windrower to Tractor" in this section. If transporting with a truck, the front driveline half must be removed and stored, or otherwise adequately secured.

6. Check local laws for width regulations and lighting or marking requirements before transporting on roads.

7. Keep Slow Moving Vehicle emblem, reflectors and lights clean and visible.

8. Do not allow riders on tractor or windrower.

9. Travel speed should be such that complete control and machine stability are maintained at all times. Do not exceed 20 mph (30 km/h). Reduce speed for corners and slippery conditions.

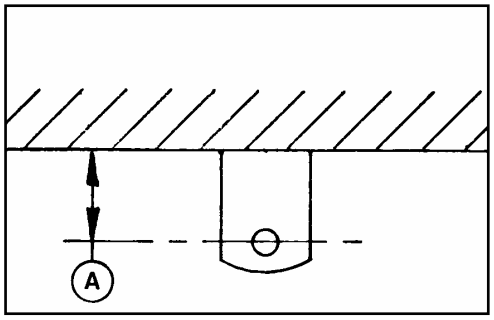

ENSURE CLEARANCE FOR TURNS

TRANSPORTING THE WINDROWER (continued)

10. **Transport Width** - Be sure transport width (X) is as narrow as possible without compromising machine stability. Recommended transport widths (X) are:
    21 ft. unit - 10'6" (3.2 m)
    25 ft. unit - 10'10" (3.3 m)
    30 ft. unit - 11'2" (3.4 m)
    36 ft. unit - 12' (3.7 m)

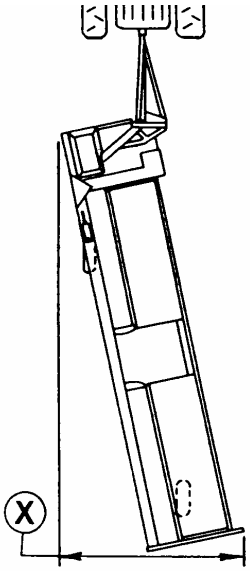

ENSURE OPTIMUM TRANSPORT WIDTH

Adjustment is made at right hand wheel, as follows:
- To narrow transport width, loosen nut (A) and turn nut (B) against bracket (C).
- To widen transport width, loosen nut (B) and turn nut (A) against bracket (C).
- When optimum transport width is reached, tighten nut to secure the position.

11. To maintain stability, transport with reel fully lowered.

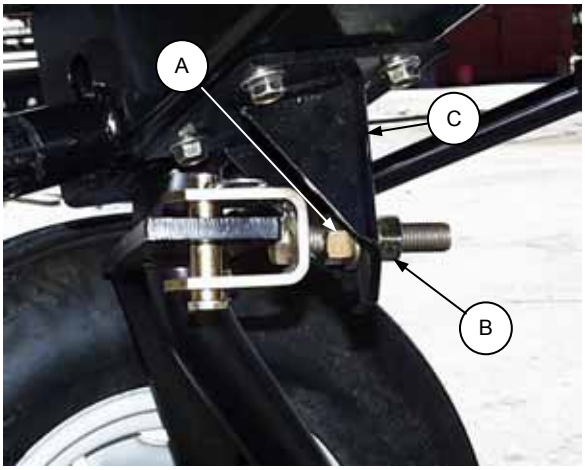

TRANSPORT WIDTH ADJUSTMENT

12. When transporting the windrower on a road or highway, use the accessory lights to provide adequate warning to operators of other vehicles. The amber lights (A) are positioned to mark the outline of the windrower, while the red lights (B) mark the rear of the unit.
    Do not use field light on roads or highways; other drivers may be confused by its position.

13. Do not transport the windrower on a road or highway at night, or in conditions which reduce visibility, such as fog or rain.

14. Be aware of roadside obstructions, oncoming traffic and bridges.

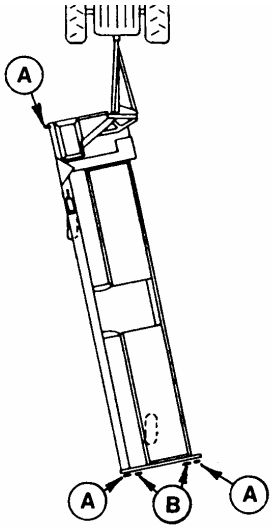

ACCESSORY LIGHT POSITIONS

CONVERTING FROM FIELD POSITION TO TRANSPORT

1. Raise header to full height.

2. Rotate levers from field to transport positions:

a. Rotate lever on hitch to transport position (A).

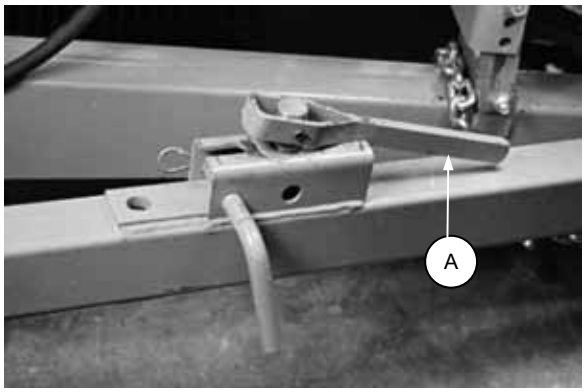

HITCH LEVER - TRANSPORT POSITION

b. Rotate lever on left wheel lock to transport position (B).

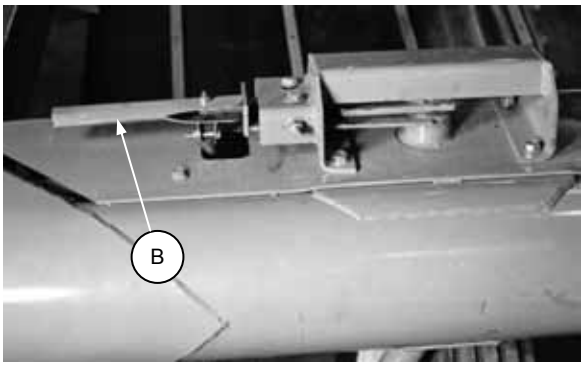

WHEEL LOCK LEVER - TRANSPORT POSITION

3. Drive forward, until telescoping hitch locks in transport position. **NOTE:** A slight, temporary increase in speed as well as steering to the left will assist in starting the telescoping action of the hitch. Slow down once hitch telescopes.

4. Once the hitch is locked, continue driving forward slowly while holding header lift valve control lever in the UP position until right wheel rotates into transport position

NOTE: In hilly terrain, a slight variation in the above procedure will provide more positive control of the conversion process. This will require one additional trip off the tractor. Proceed in the following order: Step 1, Step 2a, Step 3, Step 2b, Step 4, Step 5.

5. Install lock pins:

a. Install pin (C) in transport position on telescoping hitch. Secure with hairpin.

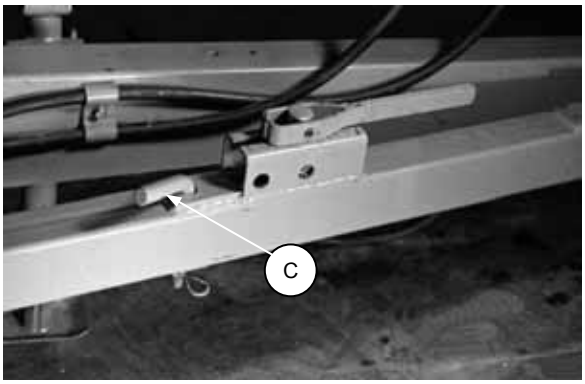

TELESCOPING HITCH PIN - TRANSPORT POSITION

b. Install pin (D) to lock header in raised position. secure with hairpin.

NOTE: Should the condition arise where the lock pin cannot be installed with the header fully raised, see "Header Lock", page 18.

HEADER LOCK - ENGAGED

CONVERTING FROM FIELD POSITION TO TRANSPORT

5. Install lock pins (continued)

c. Install pin (E) to lock right wheel in transport position. Secure with hairpin.

RIGHT WHEEL LOCK - ENGAGED

CONVERTING FROM TRANSPORT TO FIELD POSITION

1. Reverse windrower while steering tractor front wheels to the left to angle caster wheel inward. See diagram, Step 1.

2. Drive forward to check that the caster wheel will turn inward, i.e. rotate under the backsheet. If yes, continue forward until wheel is starting to face to the rear. See diagram, Step 2. If not, repeat wheel positioning, Step 1.

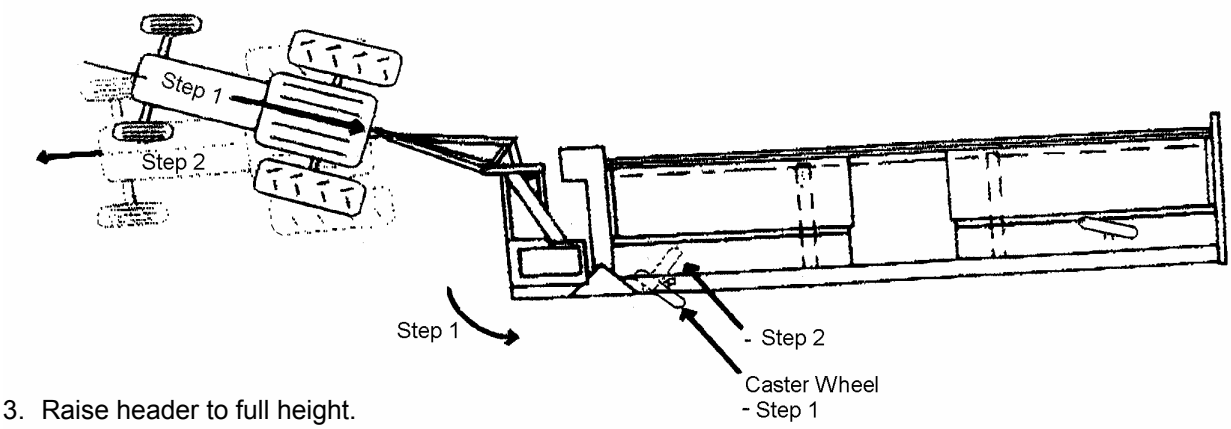

3. Raise header to full height.

4. Place levers and pins in field position:

a. Remove lock pin (A) from telescoping hitch and store. Secure with hairpin.

b. Rotate lever (B) on hitch to field position.

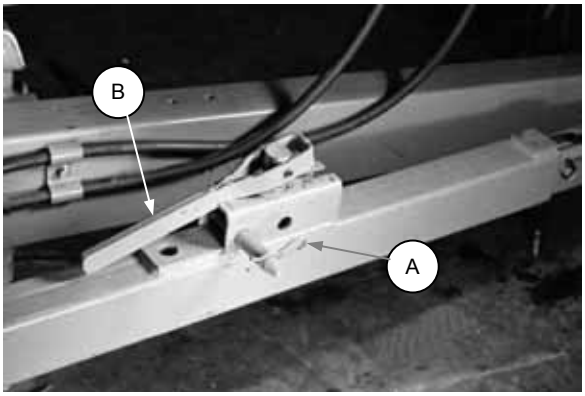

HITCH LEVER & PIN - FIELD POSITION

CONVERTING FROM TRANSPORT TO FIELD POSITION

4. Place levers and pins in field position (continued):

c. Remove pin (C) at header lock and store. Secure with hairpin.

HEADER LOCK PIN - STORAGE POSITION

d. Rotate lever on left hand wheel lock to field position (D).

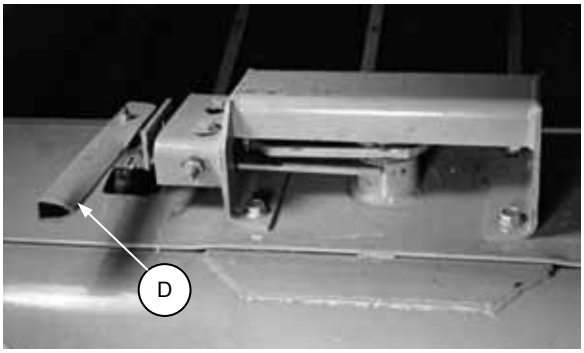

WHEEL LOCK LEVER - FIELD POSITION

e. Remove pin at right wheel lock and store at (E). Secure with hairpin.

RIGHT WHEEL LOCK PIN - STORAGE

5. Turn tractor front wheels to the right and back up until left wheel locks in field position.

6. Turn tractor front wheels left and back up to pivot the front hitch, shortening telescoping member (B) until it locks in position.

   NOTE: Turn tractor wheels as required to prevent left rear tractor tire from contacting hitch.

   If left wheel (A) has not fully castered and locked in field position, continue backing up until procedure is completed.

7. Drive ahead slowly while lowering header half-way to ground, allowing right wheel (C) to rotate to field position.

   IMPORTANT: Avoid lowering header completely before right wheel rotates to field position. This causes high loads on the cylinder, possibly resulting in early failure.

8. Engage PTO only when angle (D) is 45° or less.

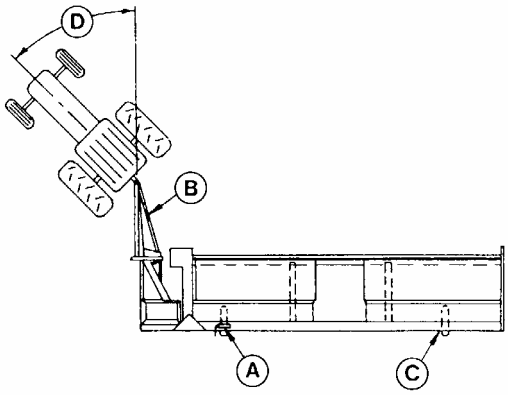

FIELD POSITION

STORAGE PROCEDURE

Do the following at the end of each operating season:

CAUTION:

1. **Clean the windrower thoroughly. Never use gasoline, naphtha or any volatile material for cleaning purposes. These materials may be toxic and/or flammable.**

2. **Cover cutterbar and sickle guards to prevent injury from accidental contact.**

Also:

3. Store in a dry, protected place if possible. If stored outside, always cover windrower with a waterproof canvas or other protective material.

4. If machine is stored outside, remove drapers and store in a dark, dry place.
   NOTE: If drapers are not removed, release tension and angle header so water/snow will not accumulate on drapers. This accumulation of weight puts excessive stress on drapers and header.

5. Lower header onto blocks to keep cutterbar off the ground.

6. Lower reel completely. If stored outside, tie reel to frame to prevent rotation caused by wind.

7. Repaint all worn or chipped painted surfaces to prevent rust.

8. Loosen all drive belts.

9. Lubricate the windrower thoroughly, leaving excess grease on fittings to keep moisture out of bearings. Apply grease to exposed threads, cylinder rods and sliding surfaces of components. Oil sickle components to prevent rust.

10. Check for worn or broken components and repair or order replacements from your dealer. Attention to these items right away will save time and effort at beginning of next season.

11. Replace or tighten any missing or loose hardware. See Specifications section for torque charts.

SERVICE PROCEDURES

CAUTION: To avoid personal injury, before servicing windrower or opening drive covers:

1. **Fully lower the header and reel. If necessary to service in the raised position, always engage header lock and reel props.**
2. **Disengage PTO.**
3. **Stop engine and remove key.**
4. **Engage park brake.**
5. **Wait for all moving parts to stop.**

Park on level surface when possible. Block wheels securely if windrower is parked on an incline. Follow all recommendations in your Tractor Operator's Manual.

Wear close-fitting clothing and cover long hair. Never wear dangling items such as scarves or bracelets.

Wear protective shoes with slip-resistant soles, a hard hat, protective glasses or goggles and heavy gloves.

Be prepared if an accident should occur. Know where the first aid kit and fire extinguishers are located and how to use them.

Keep the service area clean and dry. Wet or oily floors are slippery. Wet spots can be dangerous when working with electrical equipment. Be sure all electrical outlets and tools are properly grounded.

Use adequate light for the job at hand.

Replace all shields removed or opened for service.

Use only service and repair parts made or approved by the equipment manufacturer. Substituted parts may not meet strength, design or safety requirements.

Keep the machine clean. Never use gasoline, naphtha or any volatile material for cleaning purposes. These materials may be toxic and/or flammable.

BELTS: When installing a new belt, never pry over pulley. Loosen the necessary components to allow easy installation, then adjust tension to the minimum required to prevent slipping.

GREASING THE WINDROWER

Use an SAE Multi-Purpose High Temperature Grease with Extreme Pressure (EP) Performance and containing at least 1.5% molybdenum disulphide.
Also acceptable is an SAE Multi-Purpose Lithium Base Grease.

The following greasing points are marked on the machine by decals showing a grease gun (A), and grease interval (B) in hours of operation. Log your hours of operation and use the "Maintenance Checklist" provided to keep a record of scheduled maintenance.

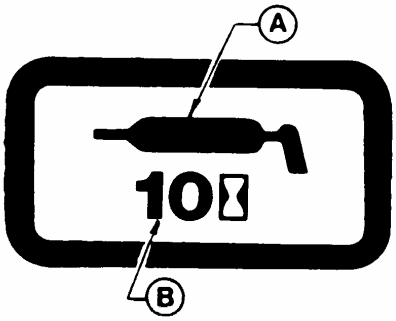

SAMPLE GREASE DECAL

Procedure:

1. Wipe grease fitting with a clean cloth before greasing, to avoid injecting dirt and grit.
2. Inject grease through fitting with grease gun until grease overflows fitting.
3. Leave excess grease on fitting to keep out dirt.
4. Replace any loose or broken fittings immediately.
5. If fitting will not take grease, remove and clean thoroughly. Also clean lubricant passageway. Replace fitting if necessary.

10 Hours or Daily:

DANGER: Stay clear of driveline until all movement has stopped. Entanglement with rotating driveline will cause serious personal injury or death. Avoid loose fitting or dangling clothing.

STAY CLEAR OF ROTATING DRIVELINE

1. Telescoping Driveline (C) - three fittings

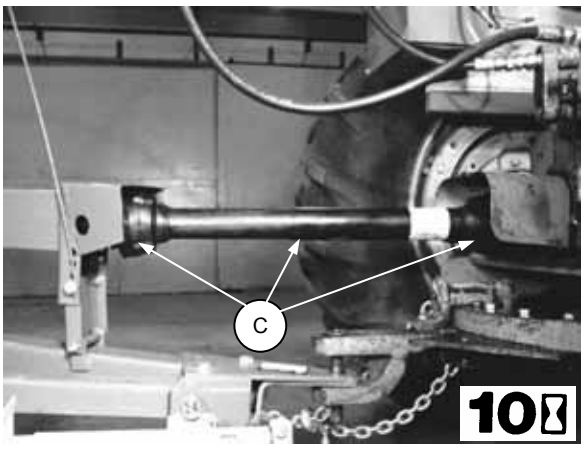

TELESCOPING DRIVELINE

GREASING THE WINDROWER (continued)

50 Hours:

1. Main Hitch Pivots (A) - four fittings

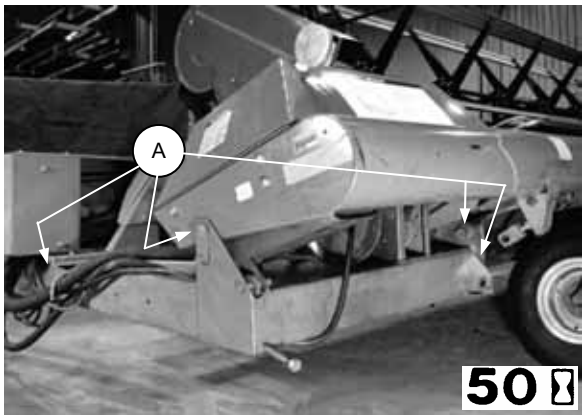

MAIN HITCH PIVOTS

2. Wheel Casters (B) & (C) - two fittings

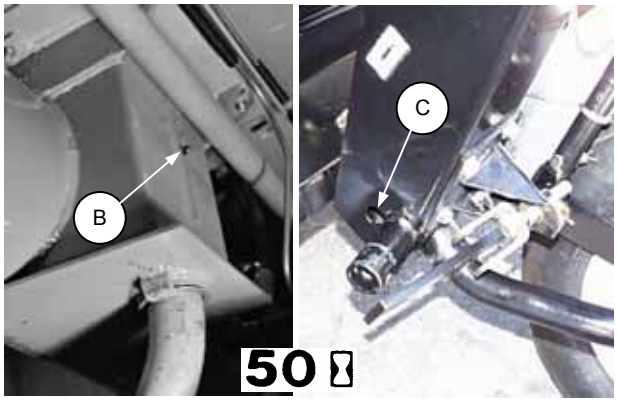

LEFT WHEEL CASTER RIGHT WHEEL CASTER

3. Reel Support Bushings (D)
   21, 25, 30 ft. - two fittings
   36 ft. - three fittings

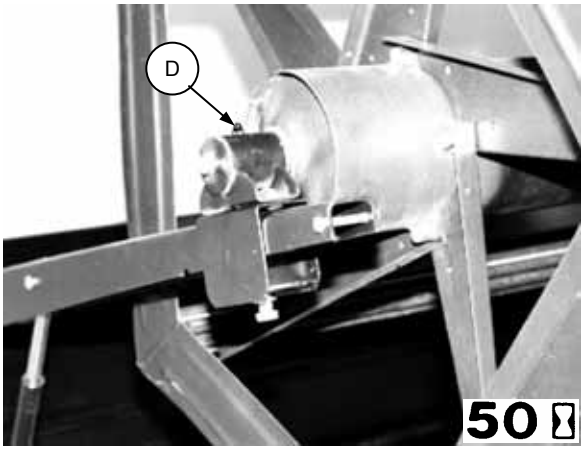

REEL SUPPORT BUSHINGS

GREASING THE WINDROWER (continued)

100 Hours or Annually:

1. Drive Shaft Bearings (A) - two fittings

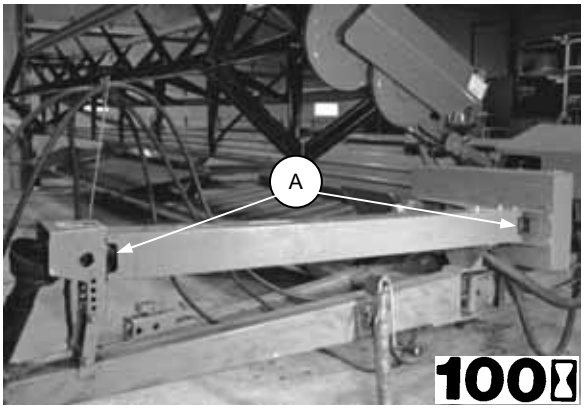

DRIVE SHAFT BEARINGS

2. Drive Shaft Wooden Support Bearing (B)
   36 ft. only - one fitting

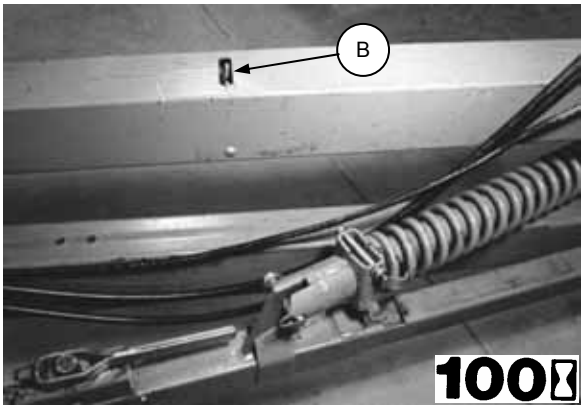

DRIVE SHAFT WOODEN SUPPORT BEARING
36 ft. ONLY

3. Countershaft Bearings (C) - two fittings

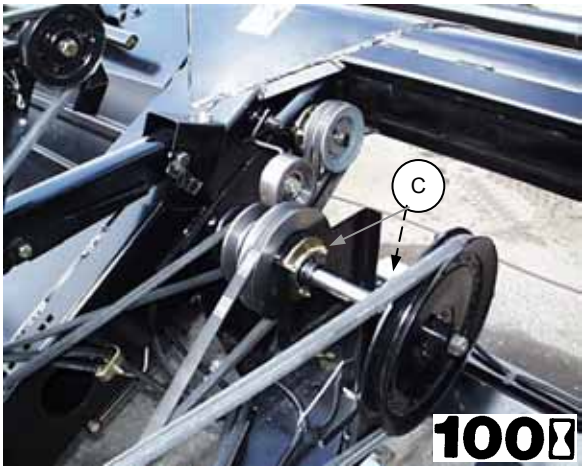

COUNTERSHAFT BEARINGS

GREASING THE WINDROWER

100 Hours or Annually (continued):

4. Sickle Drive Pulley Bearings (D) - one fitting
5. Pitman Bearings (E) - two fittings

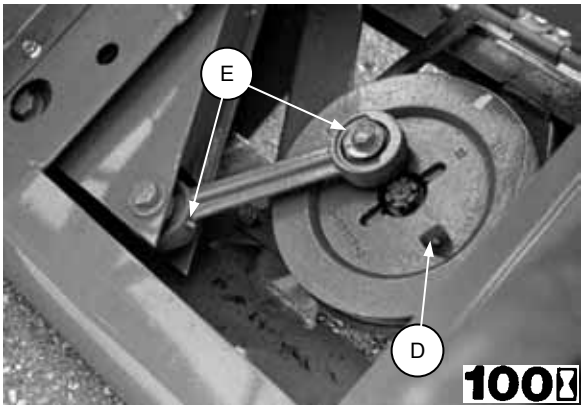

SICKLE DRIVE PULLEY AND PITMAN BEARINGS

6. Draper Drive Shaft Bearings (F)
   21, 25, 36 ft. - three fittings
   30 ft. - four fittings

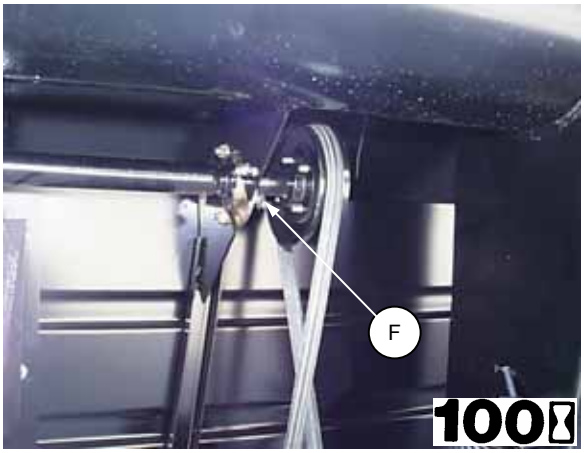

DRAPER DRIVE SHAFT BEARINGS

7. Draper Drive Shaft Wooden Support Bearings (G) - 36 ft. only - three fittings
   Remove center shield for access.

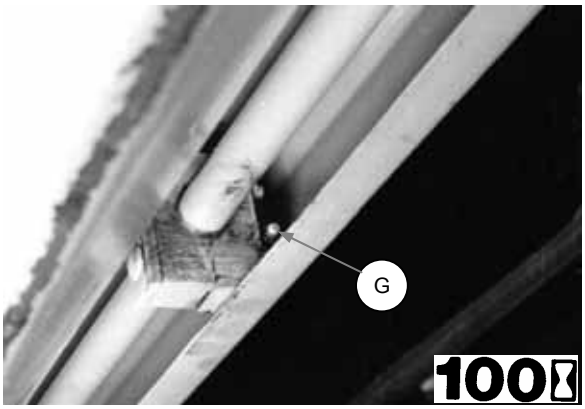

DRAPER DRIVE SHAFT WOODEN SUPPORT BEARINGS - 36 ft. ONLY

GREASING THE WINDROWER

100 Hours or Annually (continued):

8. Draper Drive Roller Bearings (H) - two fittings

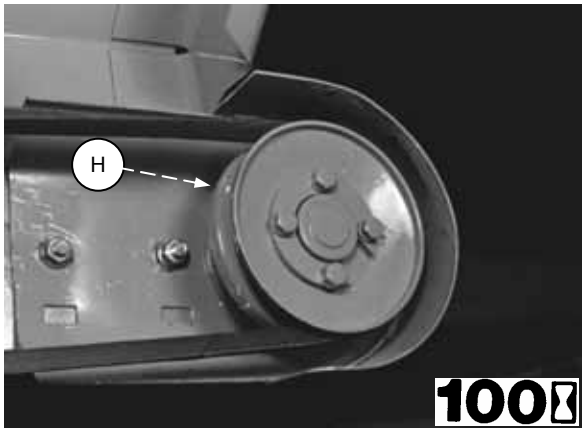

DRAPER DRIVE ROLLER BEARINGS

9. Reel Drive Pulley Hub (K) - one fitting

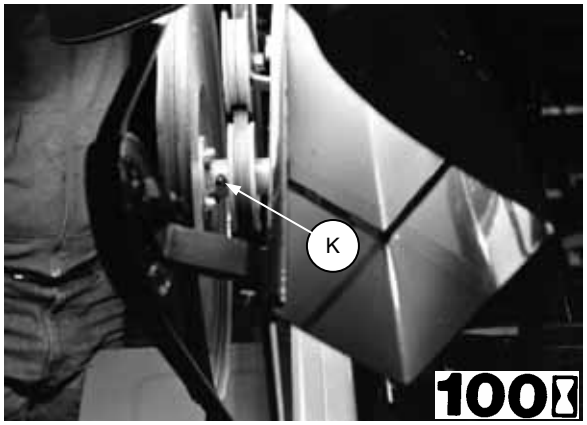

REEL DRIVE PULLEY HUB

10. Split Reel Connector Block (L)
36' – one fitting

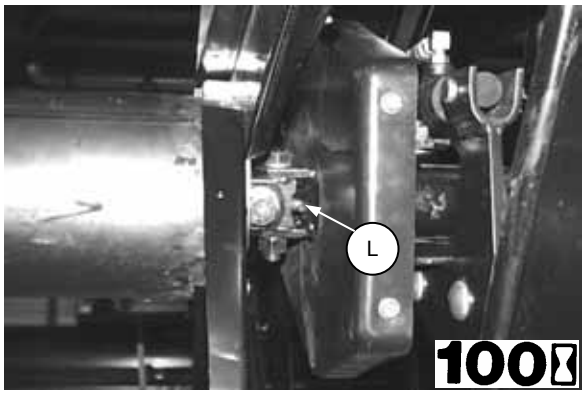

SPLIT REEL CONNECTOR BLOCK
36' ONLY (not exactly as shown)

11. Wheel Hub Bearings (M) – two fittings

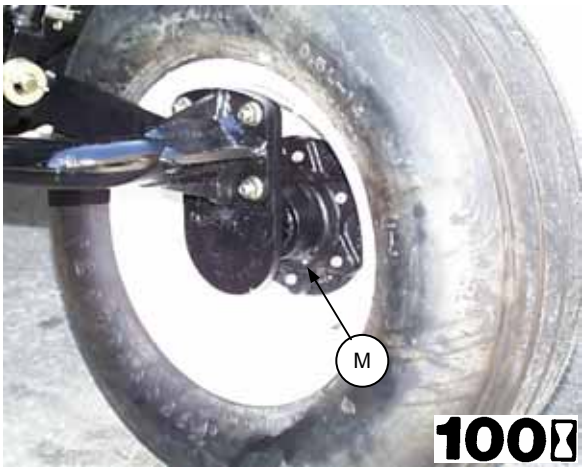

WHEEL HUB BEARINGS

TELESCOPING HITCH PIN

Lubricate pin (A) every 100 hours or once per season with a lightweight (SAE 30) oil.

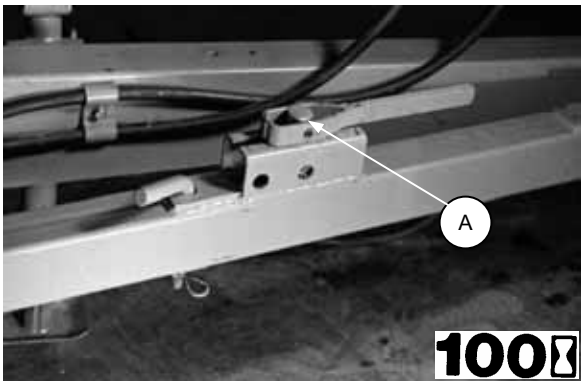

OIL TELESCOPING HITCH PIN

LEFT WHEEL LOCK ASSEMBLY

Lubricate handle (B) and lock assembly every 100 hours or once per season with a lightweight (SAE 30) oil.

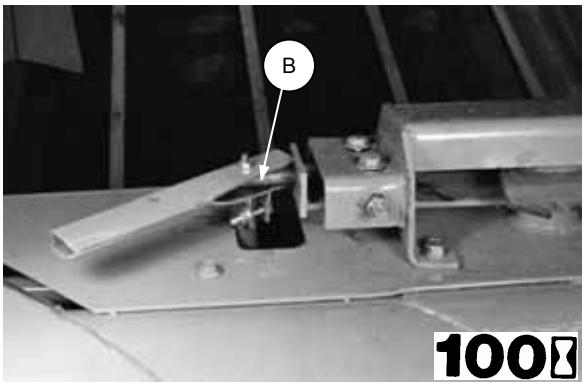

OIL LEFT WHEEL LOCK ASSEMBLY

HEADER FLOTATION

Header flotation should be set so header can be lifted with 100 to 150 lbs. force (450 to 650 N) at right hand divider rod.

NOTE: Check float with cutterbar 6 to 8 inches (150 to 200 mm) off ground.

To adjust:

1. Support cutterbar on 6 inch (150 mm) blocks.
2. Turn float adjusting screw (A) clockwise to increase float (that is, less force will be required to lift header as described). Turn float screw counterclockwise to reduce float.

NOTE: Keep threads of float adjusting screw (A) greased.

NOTE: For 21' and 25' headers with pick-up reel, an extra leaf spring can be added.
To install extra spring:

- Back off bolt (A).
- Block cutterbar with 6” (150 mm) blocks each end.
- Remove spacer from float spring pocket (both ends) to make room for the fourth spring.

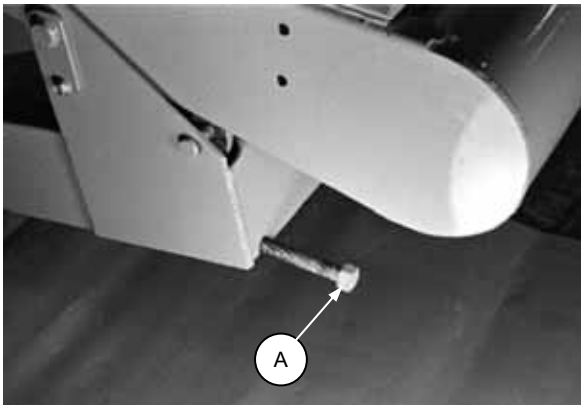

HEADER FLOTATION ADJUSTMENT

HYDRAULICS

Check hydraulic hoses and lines daily for signs of leaks.

WARNING: Avoid high-pressure fluids. Escaping fluid can penetrate the skin causing serious injury. Relieve pressure before disconnecting hydraulic lines. Tighten all connections before applying pressure. Keep hands and body away from pin- holes and nozzles which eject fluids under high pressure. Use a piece of cardboard or paper to search for leaks. If ANY fluid is injected into the skin, it must be surgically removed within a few hours by a doctor familiar with this type of injury or gangrene may result.

IMPORTANT: Keep hydraulic coupler tips and connectors clean. See "Detaching Windrower from Tractor" in Operation section for storage of hoses. Dust, dirt, water and foreign material are the major causes of hydraulic system damage.

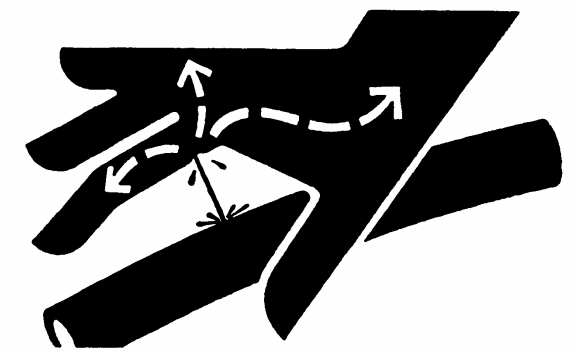

AVOID HIGH-PRESSURE FLUIDS

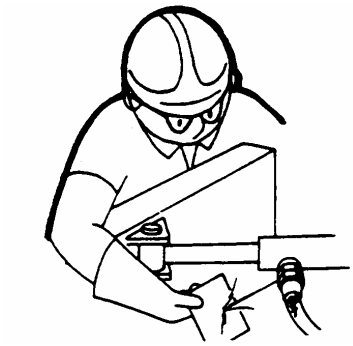

SEARCH PROPERLY FOR LEAKS

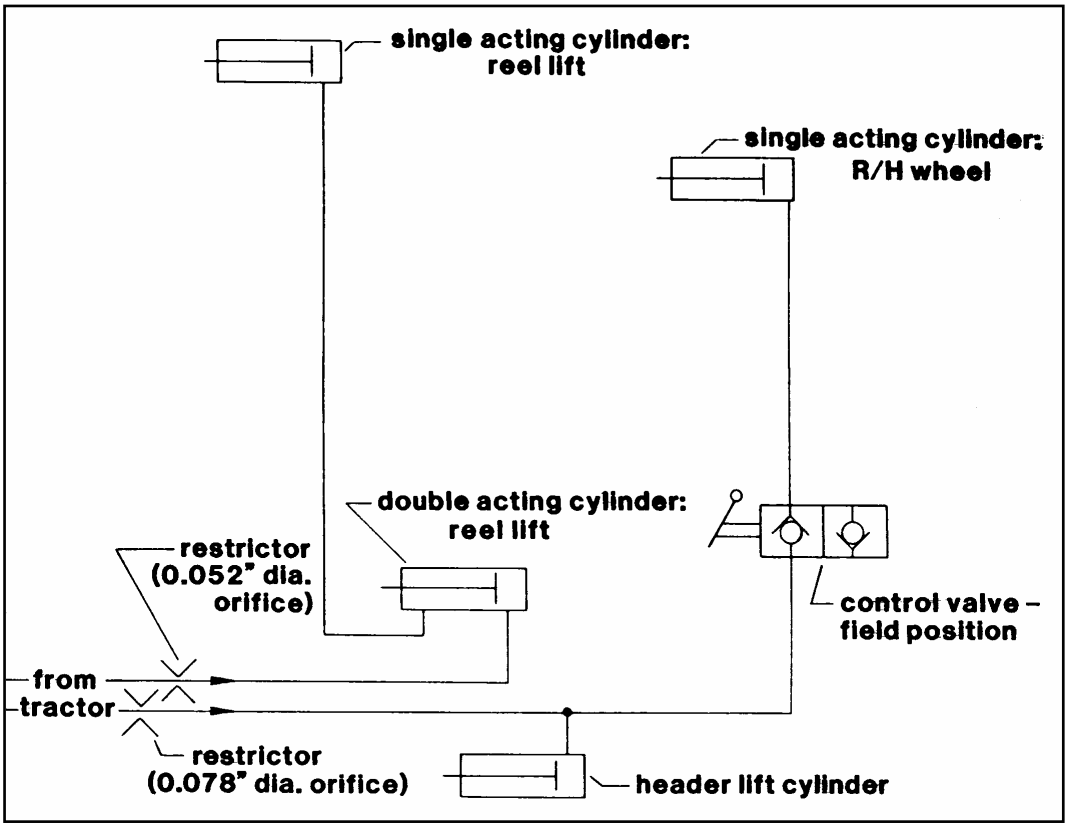

HYDRAULIC FLOW CHART - 21, 25, 30 ft. UNITS

HYDRAULICS (continued):

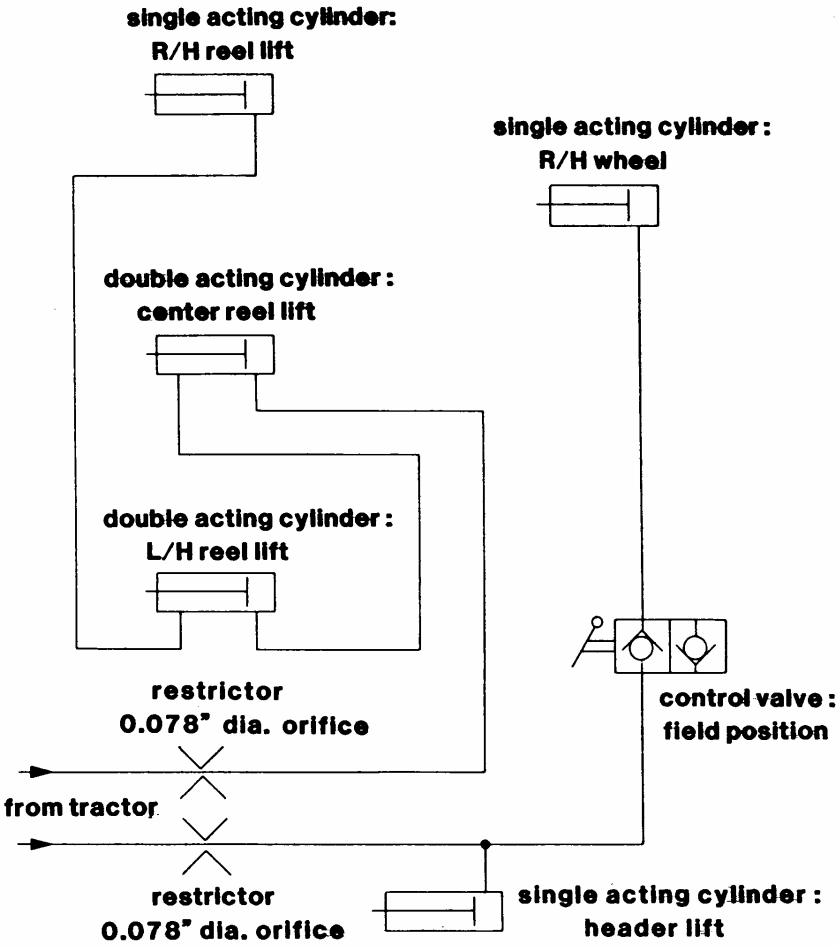

HYDRAULIC FLOW CHART - 36 ft. UNIT

NOTE: Leakage at center reel lift cylinder may be caused by excess oil in system. If so, bleed excess oil through R/H cylinder bleed screw.

Removal of Header lift Cylinder

WARNING: Should it be necessary to remove the header lift cylinder, stored energy in the header float torsion bars must be released before removing cylinder pins.

Proceed as follows:

1. Support cutterbar on blocks about 6 inches (150 mm) off the ground.

2. Back off float adjusting screw until there is no contact. Do not completely remove screw. See "Header Flotation" in this section.

ELECTRICAL

Use electrical tape and wire clips as required to prevent wires from dragging or rubbing.

Keep lights clean and replace burnt bulbs and sealed beams.

To replace amber or red light bulbs:

1. Using a screwdriver, pry plastic lens (B) from fixture.
2. Replace bulb and plastic lens.
   NOTE: Bulb trade #1156.

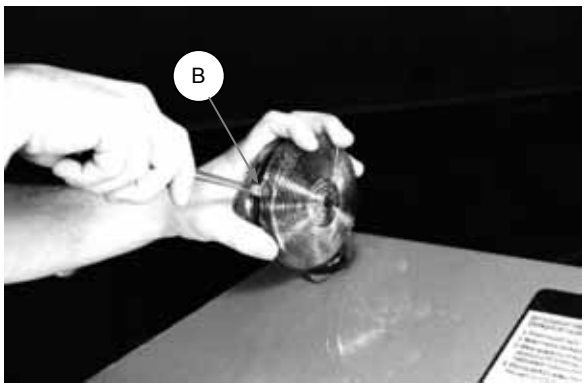

REPLACING AMBER OR RED LIGHT BULBS

To replace field lamp sealed beam:

1. Use a screwdriver to pry sealed beam from rubber bezel (C). Work your way around circumference, taking care not to break sealed beam.
2. Disconnect wire (D) and connect new sealed beam.
   NOTE: Sealed beam trade #4411
3. Carefully push new sealed beam into rubber bezel. Make sure it is properly positioned.

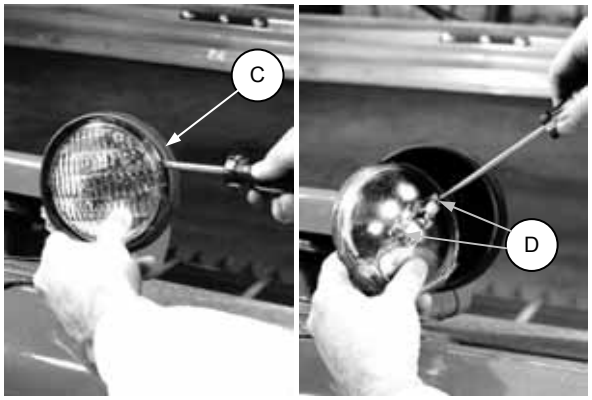

REPLACING SEALED BEAMS

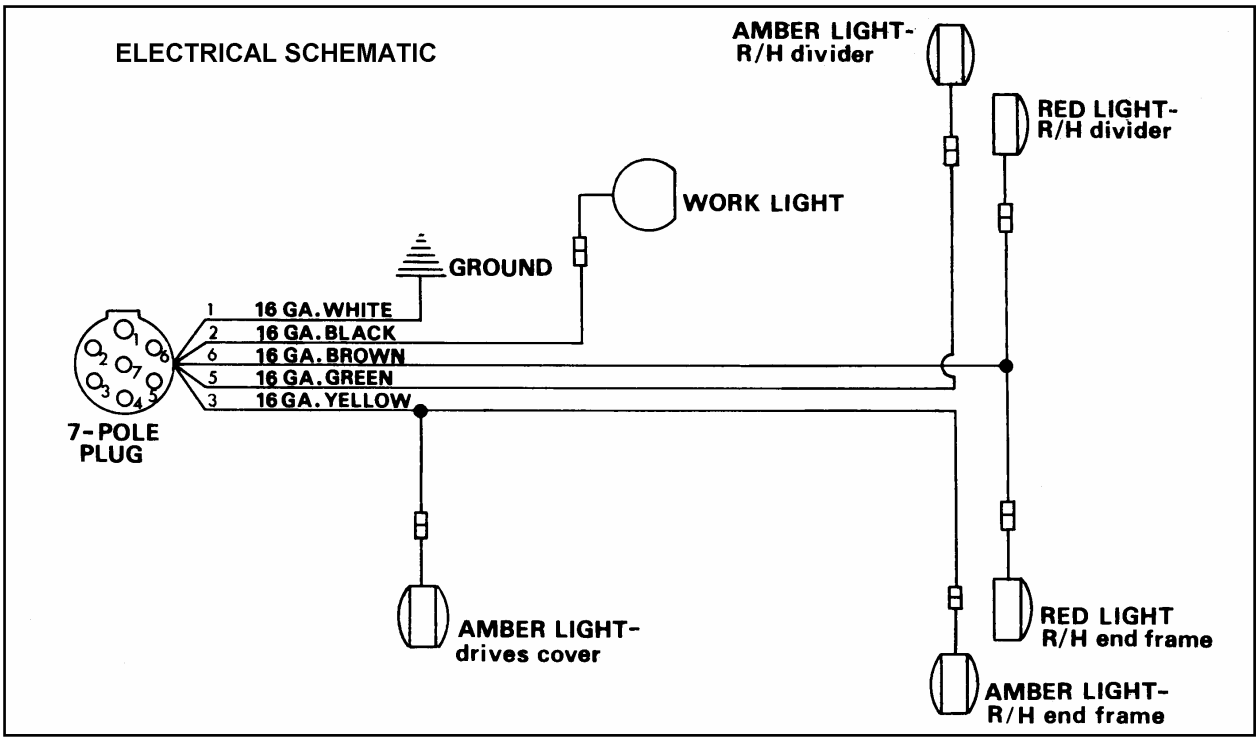

MAIN DRIVES

Main Drive Belt Alignment

IMPORTANT: Maintenance of proper belt alignment is critical to preventing the belt from rolling over in operation, causing premature failure.

For proper belt alignment, the forward edge of top idler pulley (A) must be in line with front surface of drive pulley (B).

To adjust:
1. Place straight edge (C) across front side of drive pulley (B).
2. Straight edge should contact forward edge of top idler pulley (A) while staying flush on side of pulley (B).
3. If not, loosen nuts (E), (F), (G) and (H), leaving them finger tight. Turn nut (J) to bring pulleys into alignment.
4. Tighten nuts (E), (F), (G) and (H).
5. Check idler pulley shield alignment, (see below).

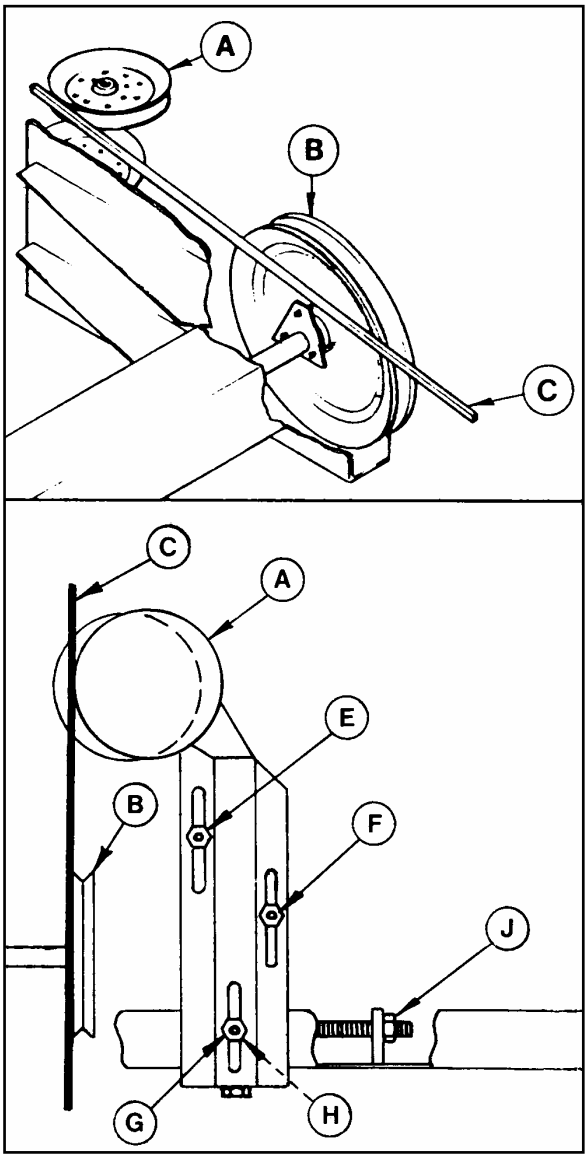

MAIN DRIVE BELT ALIGNMENT

Idler Pulley Shield Alignment

To minimize vibration and prolong belt life, be sure pulley shields are aligned to center the belt entering and leaving the shield.

To adjust:
1. Loosen locknuts (A).
2. Position the shields so the belt clearances at points (B), (C) and (D) are the same. Be sure belt does not rub shield at any point.
3. Tighten locknuts (A) to 80 to 90 ft.lbs. (110 to 120 N·m) to secure the position.

NOTE: Insert punch (E) when tightening locknuts

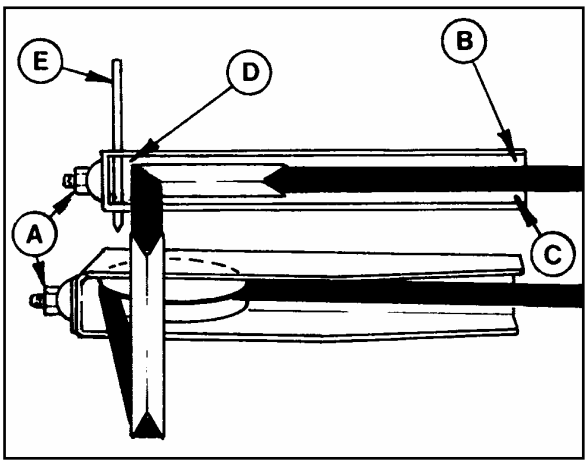

IDLER PULLEY SHIELD ALIGNMENT

MAIN DRIVES (continued)

Main Drive Belt Tension

IMPORTANT: To prolong belt and drive life, do not over tighten drive belt. Operate at minimum tension required to prevent slipping and excessive vibration. Recommended tension: 20 lbs. (90 N) force at mid-span (C) produces 1 inch (25 mm) deflection.

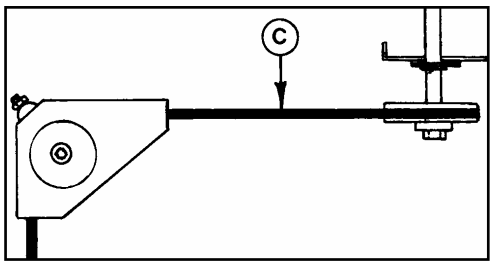

CHECKING BELT TENSION

To adjust:

1. Loosen three nuts (A), leaving them finger tight.
2. Turn bolt (B) to adjust tension. Rotate clockwise to increase tension, counter-clockwise to reduce tension.
3. Tighten nuts (A).

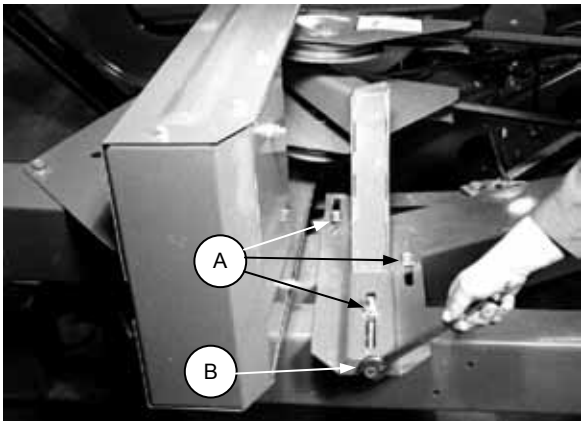

MAIN DRIVE BELT TENSION ADJUSTMENT

Removal of Main Drive Pulley

Should it be necessary to remove pulley from main drive shaft, proceed as follows:

1. Remove shield (A).
2. Remove three 3/8 bolts securing pulley (B) to triangular plates (C) and (D). Remove plate (C).
3. Remove paint from shaft in front of pulley at (E).
4. **IMPORTANT:** Using a 1-1/4 inch (32 mm) I.D. tube (F) against pulley hub (G), drive the pulley further onto the shaft to expose key (H). Remove key.
5. Remove pulley from shaft, using 3/8 bolts (J) and triangular plates (C) and (D) as a puller. Add spacers (K) as required for pulling.

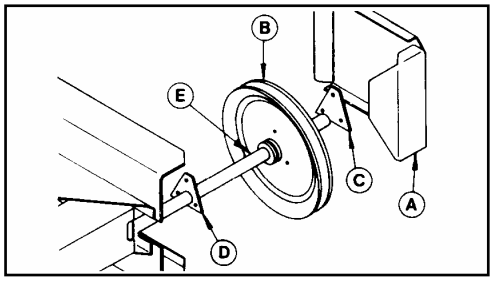

REMOVE SHIELD AND BOLTS

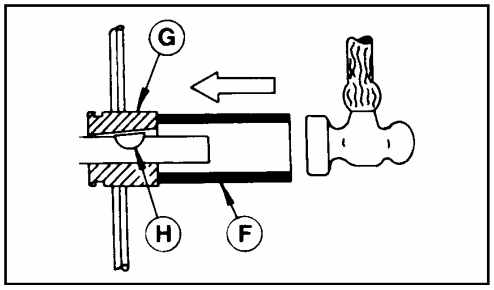

EXPOSE AND REMOVE KEY

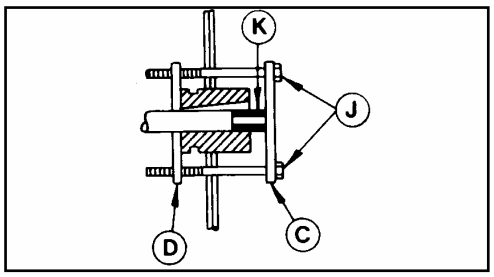

REMOVE PULLEY

SICKLE AND SICKLE DRIVE

WARNING: Keep hands clear of the area between guards and sickle at all times.

CAUTION: Wear heavy gloves when working around or handling sickles.

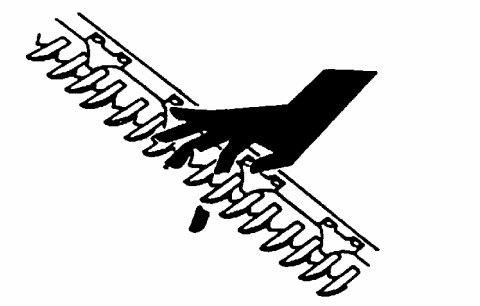

KEEP HANDS AWAY FROM SICKLE

Sickle Lubrication

Apply SAE 10 or equivalent light weight oil daily (one or two drops per section) along entire length of sickle.

NOTE: Do not oil sickle if operating in sandy conditions. Oil will cause sand to adhere to sickle components, resulting in excessive wear.

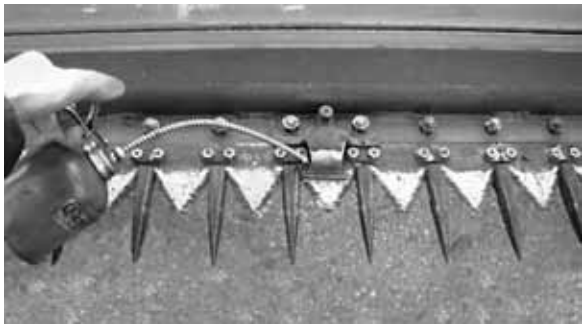

OIL SICKLE DAILY EXCEPT
IN SANDY SOIL

Sickle Sections

Check daily that sections are firmly bolted to the sickle back and are not worn or broken. Replace as required.

To replace sickle section:

1. A worn or broken sickle section can be replaced without removing sickle from cutterbar.
2. Remove lock nuts (A) and lift section off of bolts.

   IMPORTANT: Do not mix heavy and light sickle sections on same sickle.
3. Clean any dirt off of sickle back and position new sickle section on bolts. Secure with lock-nuts.

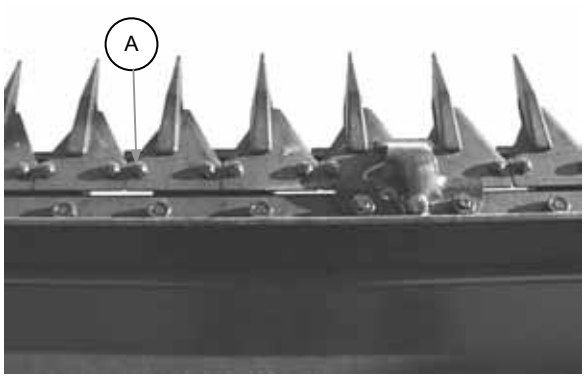

BOLT-ON SECTIONS

SICKLE AND SICKLE DRIVE (continued)

To Remove Sickle

WARNING: Always stand to rear of sickle during removal to reduce risk of injury from cutting edges. Wear heavy gloves when handling sickle.

1. Clean area around sickle head. Remove bolt (A).
2. Turn pulley (B) by hand to draw pitman (C) back and out of the way.
3. Remove sickle through hole (D) in left end frame.

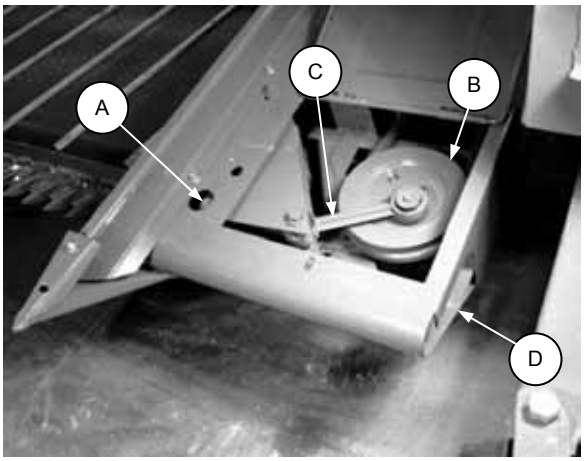

REMOVING SICKLE

To Install Sickle

WARNING: Always stand to rear of sickle during installation to reduce risk of injury from cutting edges. Wear heavy gloves when handling sickle.

IMPORTANT: Always align guards and re-set sickle hold-downs while replacing sickle. See "Guards" and "Sickle Hold-Downs" in this section.

1. Slide sickle into place and replace bolt (A), washers (B) and locknut (C).
2. Tighten locknut to 150 ft. lbs. (203 N·m)

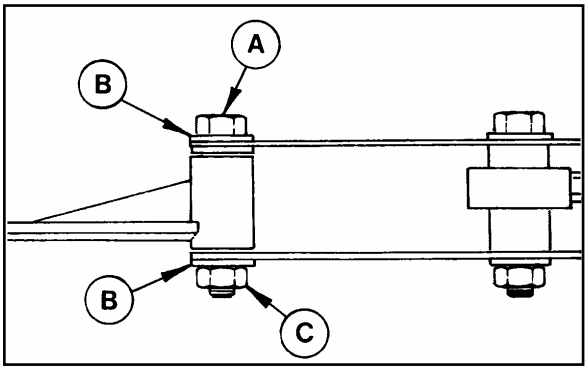

INSTALLING SICKLE

Pitman Replacement

To prevent premature bearing failure, when replacing pitman:

1. Install pitman (A), complete the required adjustments, and tighten hardware.
2. Using a pipe wrench (B) as shown, rotate pitman back and forth until outer race (C) of bearings moves in pitman housing.
3. Rotate pitman back to normal position.

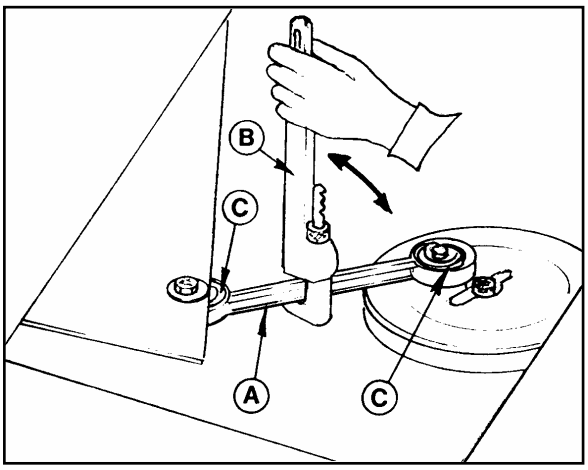

PITMAN REPLACEMENT

SICKLE AND SICKLE DRIVE (continued)

Guards

CAUTION: Always lower reel props before working under reel.

Check daily that guards are aligned to obtain proper shear cut between sickle section and guard. Sickle sections should contact shear surface of each guard.

A guard straightening tool is available from your Dealer Parts Department. To bend guard tips up, position the tool as shown at (A) and pull up. To bend tips down, position tool as at (B) and push down.

TIP: If trouble is encountered cutting tangled, but easy to cut material (canola, peas, grain) replace guards with stub guards and install a sickle hold-down on every guard. If material is tough to cut, install stub guards with top guard and adjuster plate. See your dealer for details.

Excessive Breakage
Excessive breakage of sickle sections and guards is an indication that the header flotation is set too heavy. See "Header Flotation" in this section.

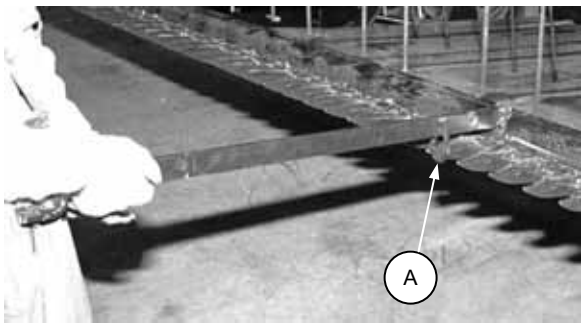

BENDING GUARD TIPS UP

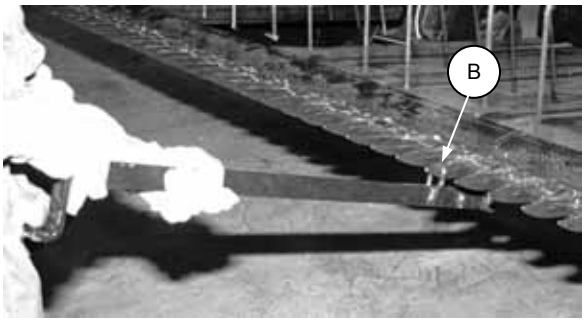

BENDING GUARD TIPS DOWN

Sickle Hold-Downs

CAUTION: Always engage reel props before working under reel.

Check daily that sickle hold-downs are set to prevent sickle sections from lifting off guards but still permit sickle to slide without binding. Set hold-downs after guards are aligned.

To adjust hold-downs:
1. Using a feeler gauge between hold-down and sickle section, turn bolt (A) to obtain 0.020 inch (0.5 mm) clearance.
2. After adjusting hold-downs, run header at a low engine speed and listen for noise due to insufficient clearance. Re-adjust as necessary.

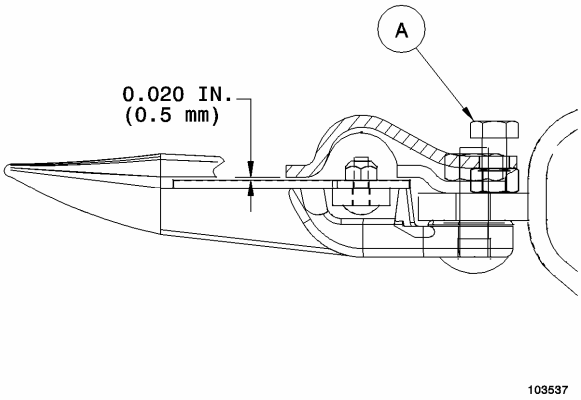

SETTING SICKLE HOLD-DOWNS

SICKLE AND SICKLE DRIVE (continued)

Sickle Register

Sickle register is the position of the sickle section at the stroke limit relative to the guard point.

To check:

1. Turn crank pulley (A) until sickle is at right or left stroke limit.

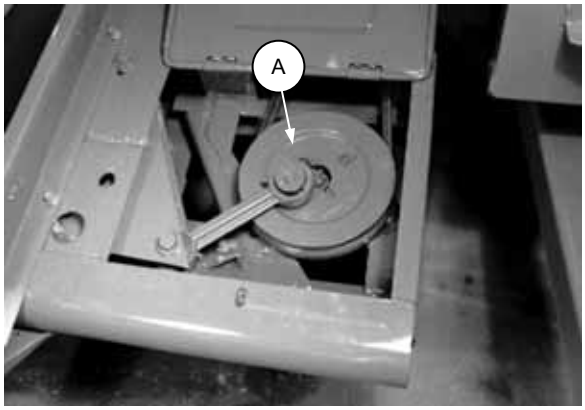

FIND STROKE LIMIT

2. Check register at middle of cutterbar. Sickle sections should be centered at guard points as at (B).

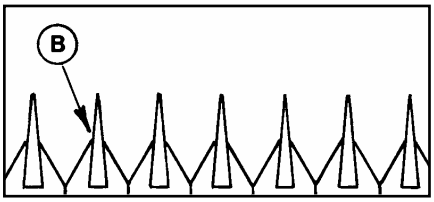

PROPER SICKLE REGISTER

To adjust:

WARNING: To avoid injury or death from fall of raised header, engage header lock before going under machine.

1. Loosen five hex nuts (C) under crank pulley.

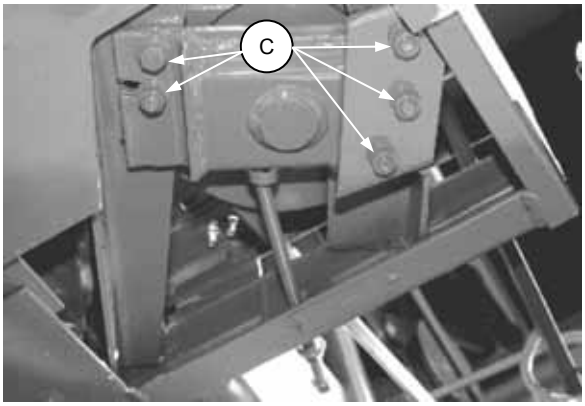

LOOSEN CRANK PULLEY HARDWARE

2. Loosen nut (D) on adjuster (E).
3. Slide adjuster (E) to center sickle sections at guard points (B).
4. Tighten hardware (C) and (D).

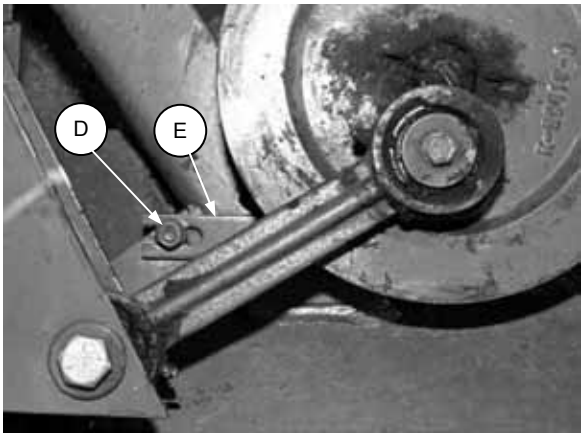

SICKLE REGISTER ADJUSTMENT

SICKLE AND SICKLE DRIVE (continued)

Sickle Drive Belt Tension

IMPORTANT: To prolong belt and drive life, do not over-tighten belt. Operate at minimum tension required to prevent slipping and excessive vibration.

To adjust:

1. **WARNING: To avoid injury or death from fall of raised header, engage header lock before going under machine.**

2. Loosen five hex nuts (A) under crank pulley.

3. Loosen locknut (B) on adjuster bolt (C).

4. Turn bolt (C) to adjust tension.

5. At correct tension, tighten locknut (B) to secure the position.

6. Tighten hardware (A) to 85 ft.lbs. (115 N·m).

7. Disengage header lock and lower header to cutting height.

8. Check belt tension and position loop bracket (D) so belt passes through center of loops.

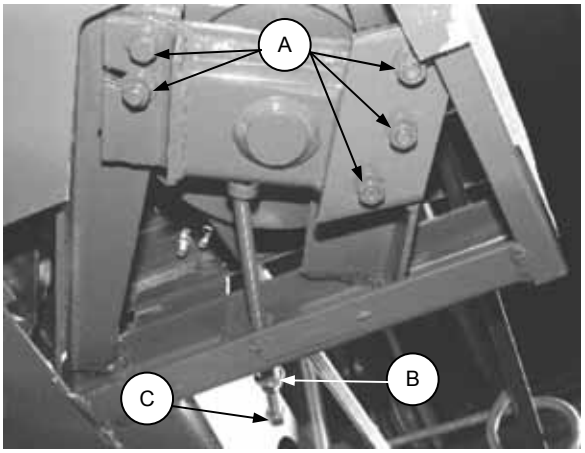

SICKLE DRIVE BELT TENSION ADJUST.

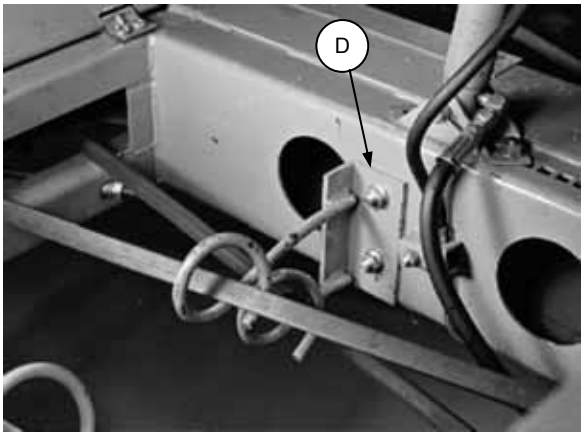

CENTER BELT THROUGH LOOPS

REEL AND REEL DRIVE

Reel Clearance From Cutterbar

The reel should be adjusted to provide 2 inches (50 mm) clearance above cutterbar with reel fully lowered.

To adjust:

1. Raise reel, engage reel props (A) and lower reel onto props.

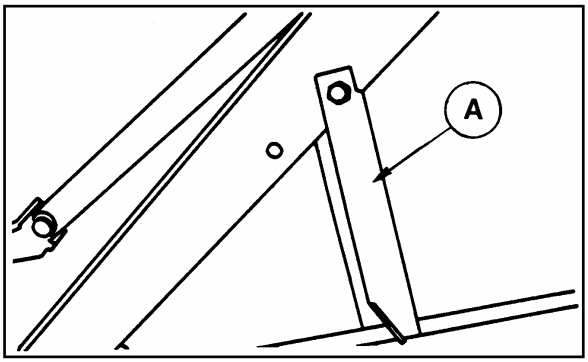

ENGAGE REEL PROPS

2. Loosen two nuts (B).
3. Slide cylinder mount (C) forward to raise reel or back to lower reel.

   NOTE: If it is necessary to move one bolt to the next hole, first tighten the nut on the second bolt.

4. Tighten nuts (B) to secure the position.
5. Repeat steps 2, 3, and 4 at other cylinder.
6. Raise reel and rotate reel props to storage position.
7. Lower reel completely and check clearance between reel and cutterbar. Repeat the adjustment if necessary to obtain 2 inch (50 mm) clearance.

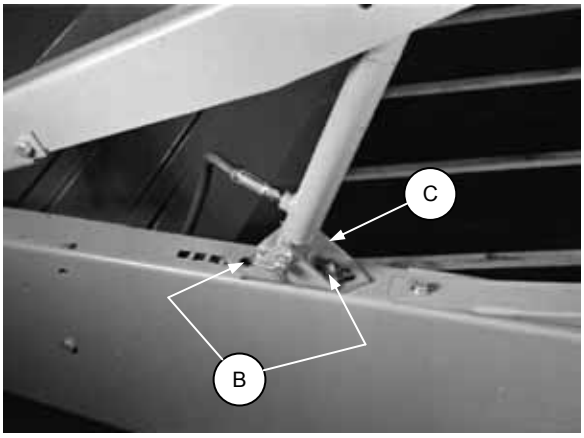

REEL CLEARANCE ADJUSTMENT

36 ft. only: To adjust reel clearance from cutterbar at the center reel support arm of the 36 foot windrower:

1. Raise reel and engage lock pin (D).
2. Loosen two nuts (E).
3. Loosen jam nut (F) inside support arm and turn adjuster bolt to reposition cylinder mount.
4. Tighten nuts (E) and (F) to secure the position.
5. Remove lock pin and place in storage position (G).
6. Lower reel and check clearance.

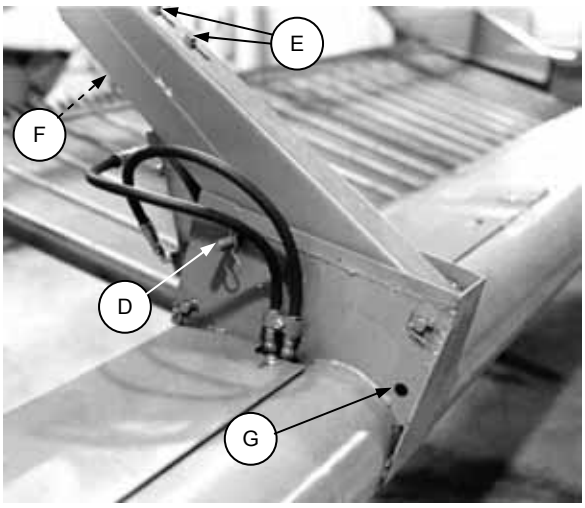

REEL CLEARANCE ADJUSTMENT
CENTER SUPPORT ARM - 36 ft. UNITS

REEL AND REEL DRIVE (continued)

Centering the Reel

Center the reel between the end sheets by adjusting the reel support arm brace (D).

To adjust:

1. Loosen two nuts (E).
2. Position brace (D) as required to center reel.
3. Tighten nuts (E) to 60 to 90 ft.lbs. (80 to 120 N·m).

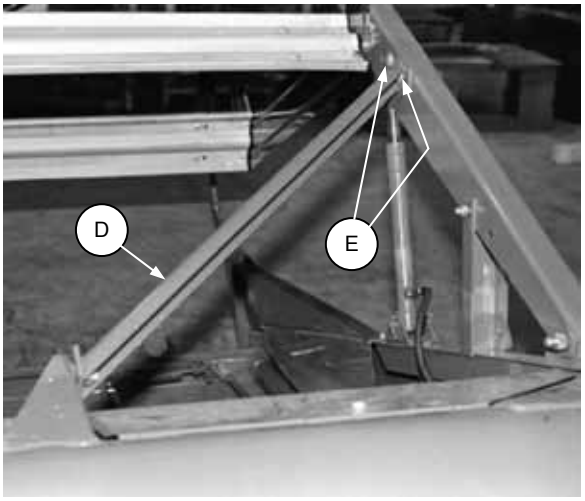

REEL CENTERING ADJUSTMENT

REEL AND REEL DRIVE (continued)

Reel Primary Belt Tension

IMPORTANT: Belt tension increases as reel is raised. To avoid damaging belt or idler arm, do not over-tighten belt. Operate at minimum tension required to prevent slipping.

To adjust:
1. Fully raise reel and engage reel props at each reel arm. Lower reel onto props.
2. To increase tension, slide channel (A) to compress spring (B).
3. To decrease tension; push washer (C) against channel spring (D) to release grip on rod, then slide channel (A) away from spring (B).
4. Lower reel to check tension. If belt slips in operation, repeat steps 1 and 2.

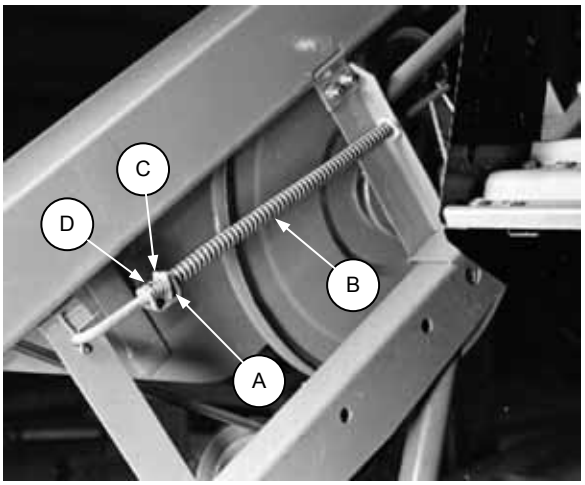

REEL PRIMARY DRIVE BELT TENSION ADJUSTMENT

Reel Final Drive Belt Tension

Adjust reel final drive belt tension so belt will not slip when reel is turned backward.

To adjust, move spring handle (D) to different notches (E).

Rotating handle forward increases belt tension.

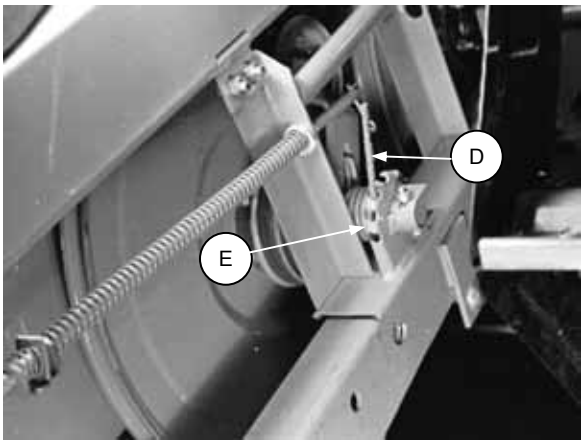

REEL FINAL DRIVE BELT TENSION ADJUSTMENT

DRAPERS AND DRAPER DRIVE

Draper Care

IMPORTANT: The investment in time to be sure drapers are properly adjusted and running true will greatly increase draper life. Be sure that:

1. Draper tension is released after the day's operation.
2. Draper tension is set just high enough to prevent slipping.
3. Draper rollers are adjusted so draper edge runs parallel to, and just touches cutterbar at cutting height

---

Draper Tracking

IMPORTANT: When first checking draper tracking, operate PTO with tractor engine at idle. Drapers can then be stopped quickly to prevent damage caused by excessive misalignment.

To align drapers:

1. If draper edge is further from cutterbar (B) at idler roller than at drive roller (C), move front of drive roller (C) away from draper (A).

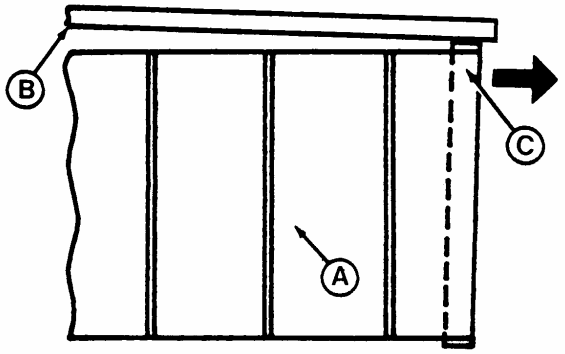

MOVE DRIVE ROLLER ⟶
TO CORRECT ALIGNMENT

2. If draper edge is closer to cutterbar (B) at idler roller than at drive roller (C), move front of drive roller (C) toward draper (A).

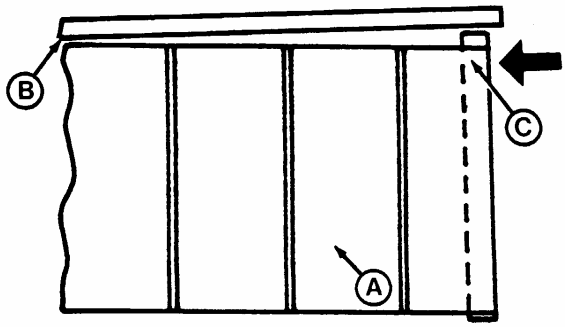

MOVE DRIVE ROLLER ⟵
TO CORRECT ALIGNMENT

DRAPERS AND DRAPER DRIVE

Draper Tracking (continued)

To adjust drive roller position, continue as follows:

3. Release draper tension by using hand or foot to move lever (A) over-center, toward end of header.

CAUTION: Spring loaded over-center action causes handle to kick back when tension is released. To avoid possible injury, do not hold lever when releasing tension.

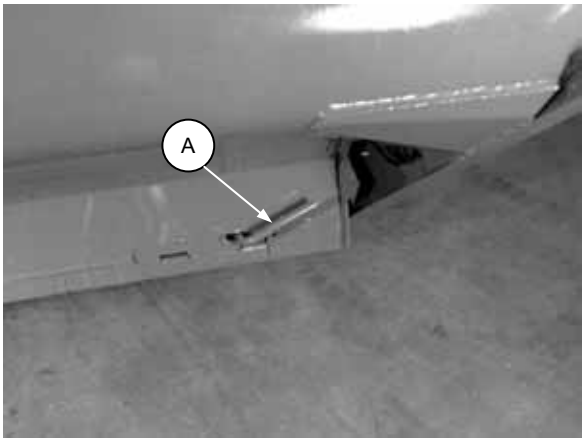

RELEASE DRAPER TENSION

4. Mark roller bracket (B) before moving roller, to show original position.
5. Loosen nut (C).
6. Move front of roller in or out as required (see Steps 1 and 2) in 1/8 inch (3 mm) increments until draper edge is parallel to cutterbar.
7. Tighten nut (C) to secure the position and apply draper tension by rotating lever (A) toward center of draper.

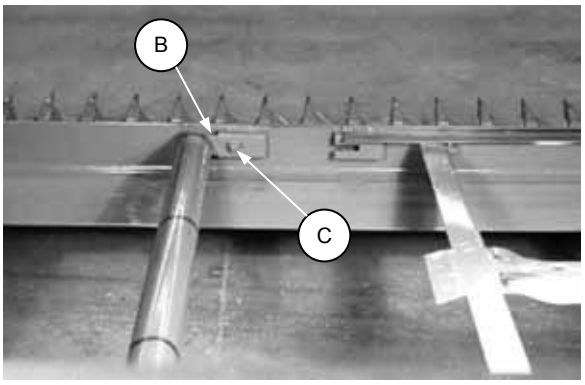

DRIVE ROLLER ADJUSTMENT
(DRAPER REMOVED FOR PHOTO CLARITY)

8. Once drapers are tracking parallel to cutterbar, adjust idler roller springs (see "Draper Tension") so that draper (D) just touches cutterbar (E) at cutting height.
9. Check that draper edges are running parallel to cutterbar after idler spring adjustment. Adjust again if necessary.

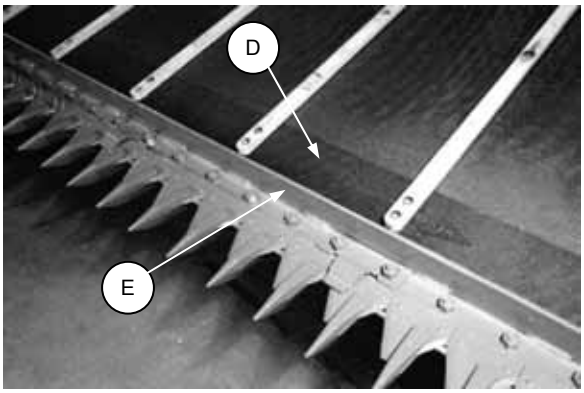

DRAPER RUNS PARALLEL TO CUTTERBAR -
JUST CONTACTING AT CUTTING HEIGHT

DRAPERS AND DRAPER DRIVE (continued)

Draper Tension

Draper tension is adjusted with spring assemblies at each end of the idler roller. Tension should be adjusted just tight enough to prevent slippage.

Also, by varying the front and rear spring settings with respect to each other, the draper can be adjusted to track closer to, or further from the cutterbar. See "Draper Tracking" in this section.

To adjust:

1. Release draper tension by using hand or foot to move lever (A) over-center, toward end of header.

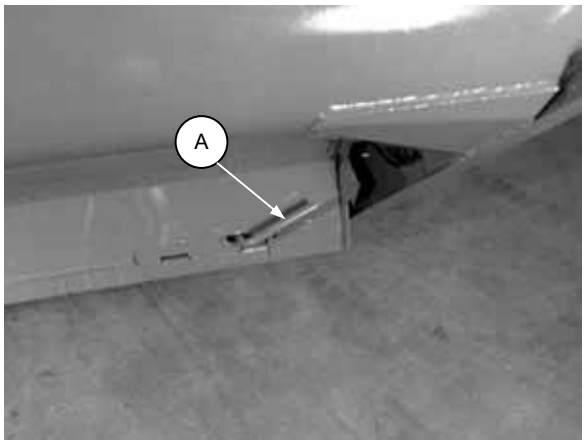

RELEASE DRAPER TENSION

CAUTION: Spring loaded over-center action causes handle to kick back when tension is released. To avoid possible injury, do not hold lever when releasing tension.

2. Springs are located at each end of idler roller.

3. To increase tension, slide U-shaped channel (B) to compress spring (C). Repeat on opposite end of roller

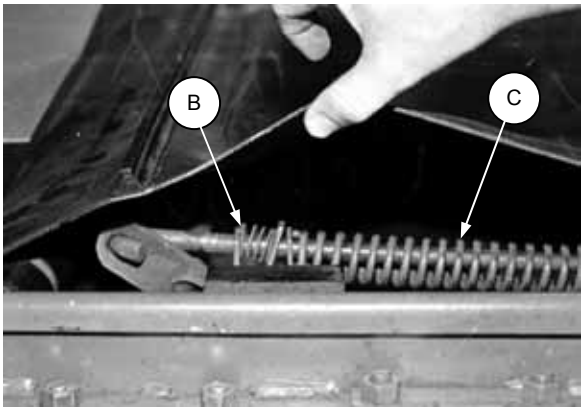

MOVE CHANNEL → TO INCREASE TENSION

4. To decrease tension, push washer (D) against channel spring (E) to release grip on rod, then slide channel (B) away from spring (C). Repeat on opposite end of roller.

5. Apply draper tension by rotating lever (A) toward center of draper.

NOTE: If drapers must be excessively tightened to prevent slippage, a drive roller lagging kit is available from your dealer.

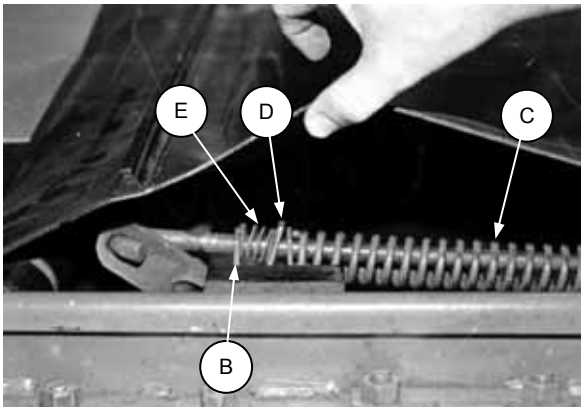

MOVE CHANNEL ← TO DECREASE TENSION

DRAPERS AND DRAPER DRIVE (continued)

Replacing Drapers

When installing drapers:

1. Right and left drapers are different lengths (except for 36 ft. unit). Be sure you have them properly positioned before cutting a draper you think is too long.

2. Install screws (B) with heads facing direction of travel.

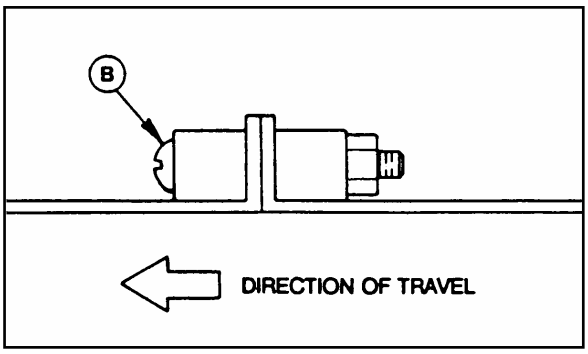

INSTALL DRAPERS CORRECTLY

Draper Drive Belts

Draper drive belt idlers are spring-loaded to provide belt tension. No tension adjustment is required.

To replace belt:
1. Use box end or socket wrench (A) to lift idler pulley (B), allowing removal and installation of belt at drive roller (C).

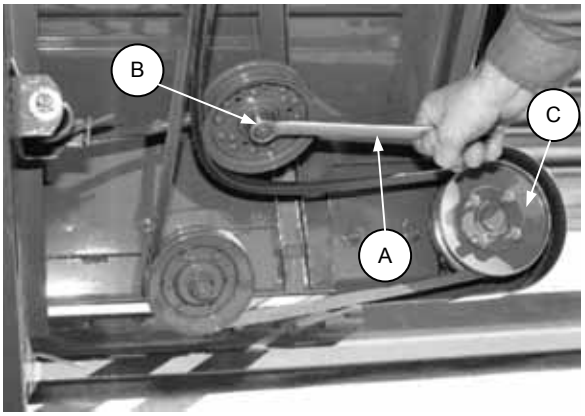

LIFT IDLER TO REMOVE BELT

2. For left hand draper drive belt, remove shaft coupler (D), remove belt from shaft pulley, and replace with new belt. Reinstall shaft coupler (D).

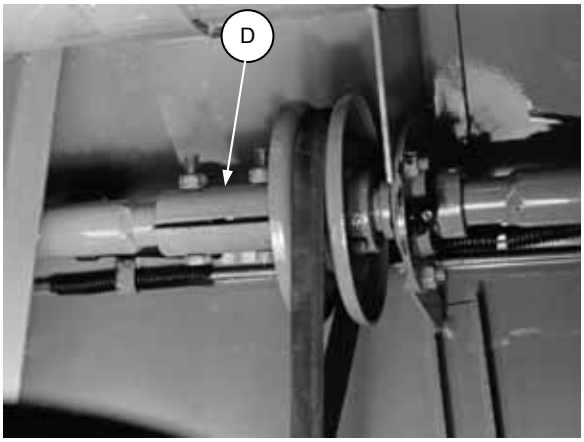

LEFT HAND DRAPER DRIVE BELT REMOVAL

DRAPERS AND DRAPER DRIVE (continued)

Draper Drive Belt Idler Alignment

Check periodically that idlers are properly aligned and idler arm is free to pivot.

To align idlers:
1. Loosen two bolts (A).
2. Turn bracket to provide proper alignment.
3. Tighten bolts (A).

To prevent belt rubbing, or idlers contacting:
1. Loosen bolt (B).
2. Slide mount up or down for best clearance and alignment.
3. Tighten bolt (B).

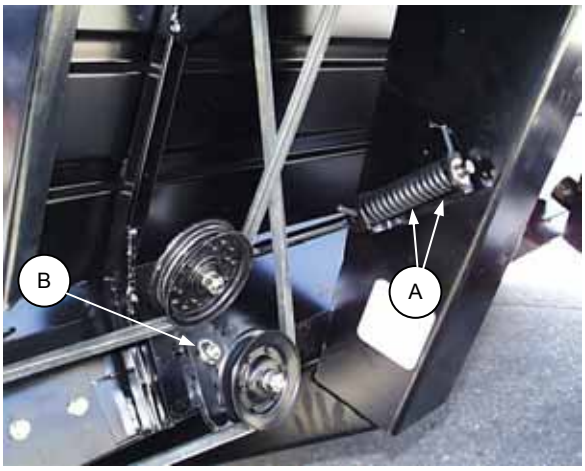

DRAPER DRIVE BELT IDLER ALIGNMENT

WHEELS AND TIRES

Wheel Bolts

Check and tighten wheel bolts after the first 10 hours of operation and every 100 hours thereafter.

Whenever a wheel is removed and re-installed, check torque after one hour of operation.

Maintain 80 to 90 ft.lbs. (110 to 120 N·m) of torque.

Follow the proper bolt tightening sequence shown.

NOTE: When installing wheel, be sure valve stem points away from wheel support.

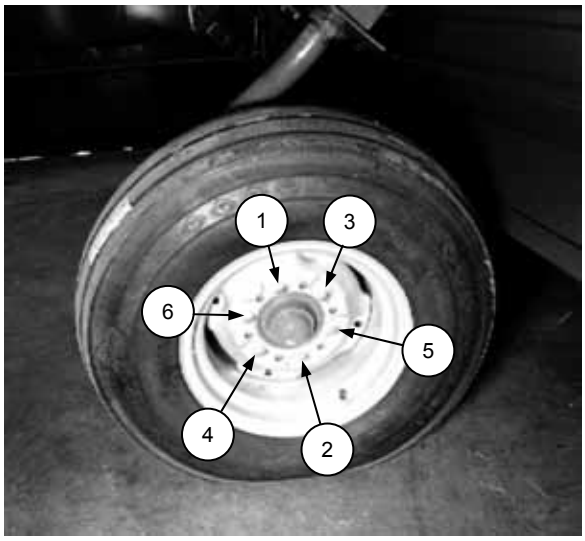

WHEEL BOLT TIGHTENING SEQUENCE

WHEELS AND TIRES (continued)

Wheel Alignment

Soil conditions may make it necessary to change the alignment of the left wheel to keep the windrower trailing at approximately 90° to the line of travel.

NOTE: For 36 ft. units, see "Stabilizer Spring Adjustment" in this section.

To adjust left wheel alignment:
1. Loosen two bolts (A).
2. If machine runs ahead, loosen adjuster nut (B) and tighten adjuster nut (C) to angle wheel further left.
3. If machine trails back, loosen adjuster nut (C) and tighten adjuster nut (B) to angle wheel further right.
4. Tighten bolts (A) and adjuster nut to secure the position.

IMPORTANT: It is not normally necessary to adjust the alignment of the right hand wheel.

However, if operating in steep hills it is important to keep the left and right wheels parallel to prevent the machine from running ahead. Under these circumstances, it may be necessary to adjust the right wheel alignment.

To adjust right wheel alignment:
1. Add washers (D) to right wheel cylinder assembly to angle the right wheel further left.
   NOTE: Spare washers are stored at pin (E).
2. Remove washers (D) to angle the right wheel further right.
3. Level cutterbar if required. See "Levelling Cutterbar" page 26.

IMPORTANT: Do not add or remove washers (D) in an attempt to level cutterbar.

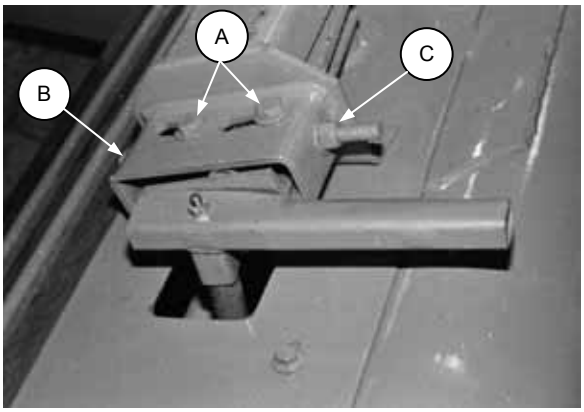

LEFT WHEEL ALIGNMENT

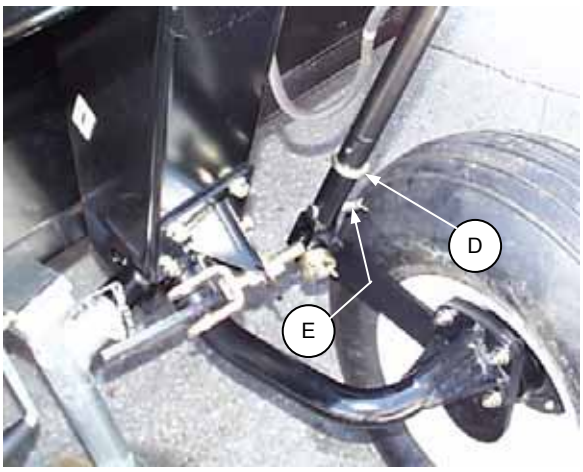

RIGHT WHEEL ALIGNMENT
DO NOT USE THIS ADJUSTMENT TO LEVEL CUTTERBAR

WHEELS AND TIRES (continued)

Tire Inflation

Check tire pressure daily. Maintain pressures recommended in Specifications section.

WARNING: Service tires safely. A tire can explode during inflation and cause serious injury or death. Never increase air pressure beyond 35 psi (241 kPa) to seat the bead on the rim. Replace the tire if it has a defect. Replace a wheel rim which has cracks, wear or severe rust. Never weld a wheel rim. Make sure all the air is removed from a tire before removing the tire from a rim. Never use force on an inflated or partially inflated tire. Make sure the tire is correctly seated before inflating to operating pressure.

Do not remove, install or make repairs to a tire on a rim unless you have the proper equipment and experience to perform the job. Take the tire and rim to a qualified tire repair shop. If the tire is not in correct position on the rim, or is too full of air, the tire bead can loosen on one side, causing air to leak at high speed and with great force. An air leak of this nature can thrust the tire in any direction, endangering anyone in the area.

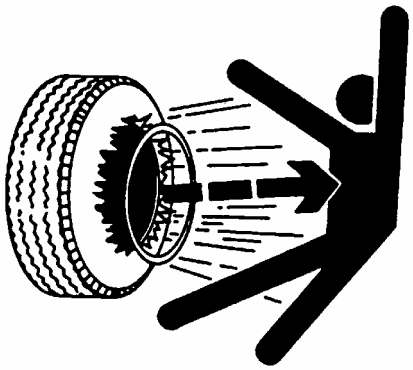

SERVICE TIRES SAFELY

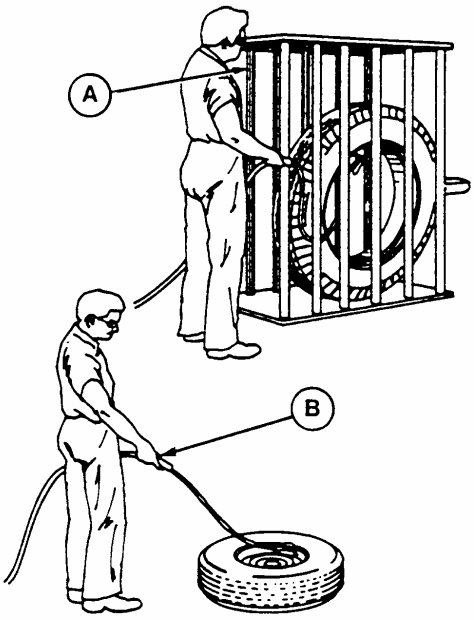

(A) - Use a safety cage if available.

(B) - Do not stand over tire. Use a clip-on chuck and extension hose.

STABILIZER SPRING ADJUSTMENT - 36 ft. ONLY

The stabilizer spring is factory set to counteract side draft in average field conditions. In hilly or wet conditions it may be necessary to increase the stabilizer effect by shortening the spring. Where less than average stabilizer effect is required to counteract side draft, the spring may be lengthened.

To adjust spring length:

1. **CAUTION: To avoid injury from rapid release of spring force, move front hitch to transport position to relax stabilizer spring before adjusting.**

2. Loosen stabilizer spring clamps (A) and reposition between maximum stabilizer effect (B) and minimum stabilizer effect (C), depending on field conditions as described above.

IMPORTANT: Operating with spring set shorter than position (B) may result in machine damage. The weld bead (D) marks the clamp position for minimum recommended spring length.

3. Move front hitch to field position.

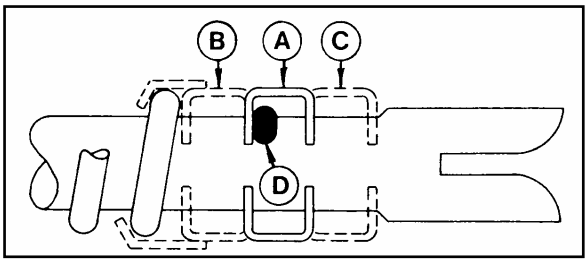

STABILIZER SPRING ADJUSTMENT - 36 ft. UNIT

MAINTENANCE SCHEDULE

The following maintenance schedule is a listing of periodic maintenance procedures, organized by service intervals. For detailed instructions, see the specific headings in Maintenance/Service section.

Service Intervals

The recommended service intervals are in hours of operation. Use the hour meter on the tractor to indicate when the next service interval has been reached.

IMPORTANT: Recommended intervals are for average conditions. Service the machine more often if operated under adverse conditions (severe dust, extra heavy loads, etc.).

Regular maintenance is the best insurance against early wear and untimely breakdowns. Following this schedule will increase machine life.

Where a service interval is given in more than one time frame, eg. "100 hours or Annually", service the machine at whichever interval is reached first.

CAUTION: Carefully follow safety messages given under "Service Procedures".

MAINTENANCE/SERVICE

MAINTENANCE SCHEDULE

AT FIRST USE: See "Preparing the Windrower" and "Break-In Period" in Operation section.

---

10 HOURS OR DAILY

1. Grease telescoping driveline.
2. Check hydraulic hoses and lines for leaks.
3. Oil sickle (except in sandy conditions).
4. Check sickle sections, guards and hold-downs.
5. Check tire pressure.

---

50 HOURS

1. Grease main hitch pivots.
2. Grease wheel casters.
3. Grease reel support bushings.

---

100 HOURS OR ANNUALLY *

1. Grease drive shaft bearings.
2. Grease drive shaft wooden support bearing - 36 ft. only.
3. Grease countershaft bearings.
4. Grease sickle drive pulley bearings.
5. Grease pitman bearings.
6. Grease draper drive shaft bearings.
7. Grease draper drive shaft wooden support bearings - 36 ft. only.
8. Grease draper drive roller bearings.
9. Grease reel drive pulley hub.
10. Grease split reel connector block - 36 ft. only.
11. Grease wheel hub bearings.
12. Oil telescoping hitch pin.
13. Oil left wheel lock assembly.
14. Check wheel bolt torques.

*It is recommended that Annual Maintenance be done prior to start of operating season.

END OF SEASON: See "Storage Procedure" in Operation section.

MAINTENANCE RECORD

Windrower No. _____ Serial No. _____

See Maintenance/Service section for details of each procedure. Copy this page to continue record.

	ACTION: ✓ - Check	♦ - Lubricate	(36') – 36' Units Only																
	Hour Meter Reading:																		
	Serviced By:																		
	Maintenance Procedure																		
	BREAK-IN	See "Preparing the Windrower" and "Break-In Period" in Operation section..																	
	10 HOURS OR DAILY																		
♦	Telescoping Driveline																		
✓	Hydraulic Hoses & Lines																		
♦	Sickle Assembly																		
✓	Sections, Guards, Hold-downs																		
✓	Tire Pressure																		
	50 HOURS																		
♦	Main Hitch Pivots																		
♦	Wheel Casters																		
♦	Reel Support Bushings																		
	100 HOURS OR ANNUALLY																		
♦	Drive Shaft Bearings																		
♦	Drive Shaft Wooden Brg. (36')																		
♦	Countershaft Bearings																		
♦	Sickle Drive Pulley Bearings																		
♦	Pitman Bearings																		
♦	Draper Drive Shaft Bearings																		
♦	Draper Drive Wood Brgs. (36')																		
♦	Draper Drive Roller Bearings																		
♦	Reel Drive Pulley Hub																		
♦	Split Reel Connector Blk. (36')																		
♦	Wheel Hub Bearings																		
♦	Telescoping Hitch Pin																		
♦	Left Wheel Lock Assembly																		
✓	Wheel Bolt Torque																		
	STORAGE	See "Storage Procedure" in Operation Section"																	

TROUBLE SHOOTING

SYMPTOM	PROBLEM	SOLUTION	REF.
WINDROW FORMATION			
Heads in center of windrow, butts sticking up.	Ground speed too fast.	Reduce ground speed.	19
Heads in center of windrow.	Draper speed too fast.	Reduce draper speed (try running R/H draper slower than L/H).	23
Windrow too narrow.	Opening too narrow.	Remove draper extensions.	24
Windrow too wide.	Opening too wide.	Install draper extensions.	25
	Drapers too slow.	Increase draper speed.	23
Uneven windrow.	Ground speed too fast for drapers.	Reduce ground speed.	19
	Reel too low.	Raise reel.	21
	Reel too fast.	Reduce reel speed.	20
Windrow falls through stubble.	Stubble too high.	Reduce cutting height.	18
	Stubble too thin.	Reduce plant spacing at next seeding.	---
	Seed rows too wide.	Reduce row spacing at next seeding.	---
Delivery of bulky crop impeded by frame tube	Insufficient clearance to back tube.	Raise frame at casters for more clearance	26
CROP LOSS AT CUTTERBAR			
Heads shattering or breaking off.	Reel speed too fast.	Reduce reel speed.	20
	Ground speed too fast.	Reduce ground speed.	19
	Crop too ripe.	Cut earlier or at night when humidity is higher.	---
Cut grain falling ahead of cutterbar.	Reel too high.	Lower reel.	21
	Header too high.	Lower header.	18
Does not pick up crop that is down.	Cutterbar too high.	Lower header.	18
	Reel too high.	Lower reel.	21
	Reel too far back.	Move reel forward.	22
	Ground speed too fast for reel speed.	Reduce ground speed or increase reel speed.	19 20
	Cutterbar not level.	Level cutterbar.	26

TROUBLE SHOOTING

SYMPTOM	PROBLEM	SOLUTION	REF.
CROP LOSS AT CUTTERBAR (cont'd)			
Rape or flax catches at R/H or L/H divider.	Divider rod not installed.	Install divider rod to push crop down to allow cutting.	17
Excessive bouncing.	Float set too light	Loosen float springs.	42
CROP LOSS AT DRAPERS			
Draper rollers wrap.	Drapers not tracking straight.	Adjust drive roller.	56
	Drapers running too far back.	Adjust idler roller.	58
	Upper draper track not installed on rear draper track extension.	Install upper draper track.	25
	Draper edges torn.	Replace draper.	59
Material catches between draper and frame in corners.	Turning corner too sharply, causing machine to back over windrow.	Turn corners less sharply.	28
TRANSPORT			
Transport too wide.	R/H wheel steered incorrectly.	Adjust wheel steering.	31
R/H wheel does not go into transport.	Selector valve incorrectly positioned.	Ensure L/H wheel latch is in transport position.	32
	Tractor hydraulic pressure is low.	Hold header lift valve and drive forward.	---
Can not install header lock pin.	Clevis not in adjustment.	With header fully raised, install shim washers between bracket and stop.	18
L/H wheel does not lock in field position.	Wheel not castered to field position.	Drive tractor to fully caster L/H wheel to field position.	34
DRIVES			
Sickle drive pounds.	Loose bolts at radius arm pivot, sickle head, pitman, or crank wheel mount.	Tighten bolts.	---
	Loose bearings in crank wheel.	Adjust.	---
	Bearings loose in pitman.	Replace bearing or pitman.	

TROUBLE SHOOTING

SYMPTOM	PROBLEM	SOLUTION	REF.
DRIVES			
Sickle drive pounds (continued).	Loose guards or sections.	Tighten.	48
	Sickle driving hard (plugging).	Clean sickle.	29
		Adjust sickle hold-downs.	50
		Replace worn parts.	---
	Sickle running too fast.	Install pulleys for correct PTO speed.	7
Ragged cut stubble.	Ground speed too fast.	Reduce ground speed.	19
	Sickle operating too slow.	Maintain proper RPM on PTO.	---
		Install pulleys for correct PTO speed.	7
	Sections or guards worn or damaged.	Replace and adjust.	48
	Sections above guard cutting edge.	Adjust sickle hold-downs.	50
Excessive braking of guards.	Float set too heavy.	Tighten float springs.	42
Main drive belt whips excessively and/or turns over.	Loose belt.	Tighten belt.	47
	Main drive idlers not aligned with drive pulley.	Adjust idler alignment.	46
		Replace belt if it has turned over.	47
	Pulleys bent.	Replace pulleys.	47
	Shafts bent.	Replace shafts.	---
	Sickle loads excessive.	Clean and adjust sickle.	48
		Reduce ground speed.	19
	PTO speed too high.	Maintain proper RPM on PTO.	---
		Install correct pulleys for PTO speed.	7

TROUBLE SHOOTING

SYMPTOM	PROBLEM	SOLUTION	REF.
DRIVES (continued)			
Sickle drive belt whipping.	Loose belt.	Tighten belt.	52
	Pulley or shaft bent.	Replace damaged part.	47
	PTO speed too high.	Maintain proper RPM on PTO.	---
		Install correct pulleys.	7
	Belt guides missing.	Install guides.	52
	Sickle loads excessive.	Clean and adjust sickle.	48
		Reduce ground speed.	19
Draper drive belts come off.	Idlers misaligned.	Adjust idlers.	60
Reel final drive belt comes off.	Belt misaligned due to reel position.	Center reel and tighten reel brace.	54
Primary reel drive belt comes off.	Idlers misaligned.	Adjust idlers.	22
DRAPERS			
Excessive wear on one side of drapers.	Improper installation.	Install correctly.	59
	Drapers not tracking parallel to cutterbar.	Adjust draper tracking.	56
	Rollers dirty or bent.	Clean or replace roller.	---
	Insufficient draper tension.	Adjust draper tension.	58
Rips or cuts in drapers.	Bent draper tracks.	Straighten draper tracks.	---
	Foreign material (sticks, wire etc.).	Clear the area of foreign material.	---
Draper slippage causing burns.	Insufficient draper tension.	Adjust draper tension.	58
Excessive wear or breakage of draper slats.	Insufficient draper tension.	Adjust draper tension.	58
	Lower draper track bent.	Straighten track.	---

ATTACHMENTS

The following attachments are available from your Dealer:

PTO CONVERSION KIT – 1000 to 540 RPM

WholeGoods order number: B1354

To convert windrower to match your tractor PTO speed.

Kit includes front yoke of driveline, decal and instruction for interchange of main drive pulleys.

See "Preparing the Windrower" in Operation section to determine if kit is required.

NARROW DELIVERY OPENING KIT

21', 25' & 30' – WholeGoods order number B2847
36' – Parts order number 32918

For 21, 25 and 30 ft. windrowers, this kit allows delivery opening to be narrowed to 45-1/2 inches (1155 mm).

Kit includes draper track extensions, drive belt and draper extension.

For 36 ft. windrower, the draper extension alone is required to narrow the delivery opening to 52-3/4 inches (1340 mm).

See "Delivery Opening" in Operation section for installation instructions.

HITCH PLATE

WholeGoods order number: B1495

To convert windrower hitch to clevis type for tractors with straight drawbar.

See "Preparing the Windrower" in Operation section for installation instructions.

LEFT HAND DIVIDER ROD

Parts order number: 29792

A divider rod may be added to the left divider to prevent catching in crops such as rape or flax. See "Right Hand Divider Rod" in Operation section.

SIDE DRAFT STABILIZER KIT

WholeGoods order number: B1855

Standard on 36' (and 30' Australian units), this kit may be added to smaller units to counteract side draft in hilly or wet conditions.

DRAPER DRIVE ROLLER LAGGING KIT

WholeGoods order number: B2543

For conditions where draper must be overly tightened to prevent slippage, kit provides lagging for two draper drive rollers.

UNLOADING & ASSEMBLY

UNLOADING THE WINDROWER

Refer to Unloading and Assembly Instructions booklet for instructions on safely unloading, handling and assembling the windrower.

INDEX

INDEX

S

T

U

W

PULL TYPE WINDROWER
PRE-DELIVERY CHECKLIST

Windrower Model: _____ Serial No: _____

Perform these checks and adjustments prior to delivery to your customer. See the Operator's Manual and Assembly Instructions for adjustment details.

CAUTION: Carefully follow the instructions given. Be alert for safety related messages which bring your attention to hazards and unsafe practices.

- ❑ Check for shipping damage or missing parts.
- ❑ Bleed right reel lift cylinder.
- ❑ Center reel between end sheets.
- ❑ Adjust reel fore-aft position.
- ❑ Check reel drive idler arm is properly located for reel fore-aft position.
- ❑ Adjust reel clearance from cutterbar. (2 in. [50 mm])
- ❑ Check main drive belt idler alignment.
- ❑ Check main drive idlers mounting bolt torque. (80 - 90 ft. lbs. [110 - 120 N·m])
- ❑ Grease float adjusting screw.
- ❑ Check header flotation (100 - 150 lbs. [450 - 650 N])
- ❑ Grease all bearings.
- ❑ Grease both wheel casters until grease is forced out top or bottom of caster bearing.
- ❑ Check tire pressure – 24 to 28 psi (165 – 190 kPa).
- ❑ Turn drives by hand to check for binding. AVOID PINCH POINTS.
- ❑ Check draper tracking and tension.
- ❑ Adjust cutterbar level.
- ❑ Run machine for 15 minutes, STOP MACHINE and check drives for belt/idler alignment and heated bearings. Check knife sections for discolouration caused by misalignment of components.
- ❑ Check hydraulic hose routing, ensuring adequate clearance with header and reel up or down.
- ❑ Convert machine to transport position:
  - ❑ Check telescoping hitch operation.
  - ❑ Check transport pins install easily.
  - ❑ Check wheels caster properly into position.
  - ❑ Check transport width.
- ❑ Bleed right wheel lift cylinder.
- ❑ Check routing of electrical wiring and hoses in transport.
- ❑ Check lights are functional.

Date Checked: _____ Checked By: _____