M105, M155, M155*E4*, and M205 Self-Propelled Windrowers
STEERING ROD KIT (MD #160682)
INSTALLATION INSTRUCTIONS

This kit is used to replace a failed steering link on an M Series Windrower.

A list of parts included in the kit is provided.

NOTE: Keep your MacDon publications up-to-date. The most current version of this instruction can be downloaded from our Dealer-only site (*https://portal.macdon.com*) (login required).

Installation Time

This kit will take approximately 2 hours to install.

Conventions

The following conventions are used in this document:

- Right and left are determined from the operator's position, facing forward with the windrower in cab-forward position.
- Unless otherwise noted, use the standard torque values provided in the windrower operator's manual and technical manual.

Parts List

This kit includes the following parts:

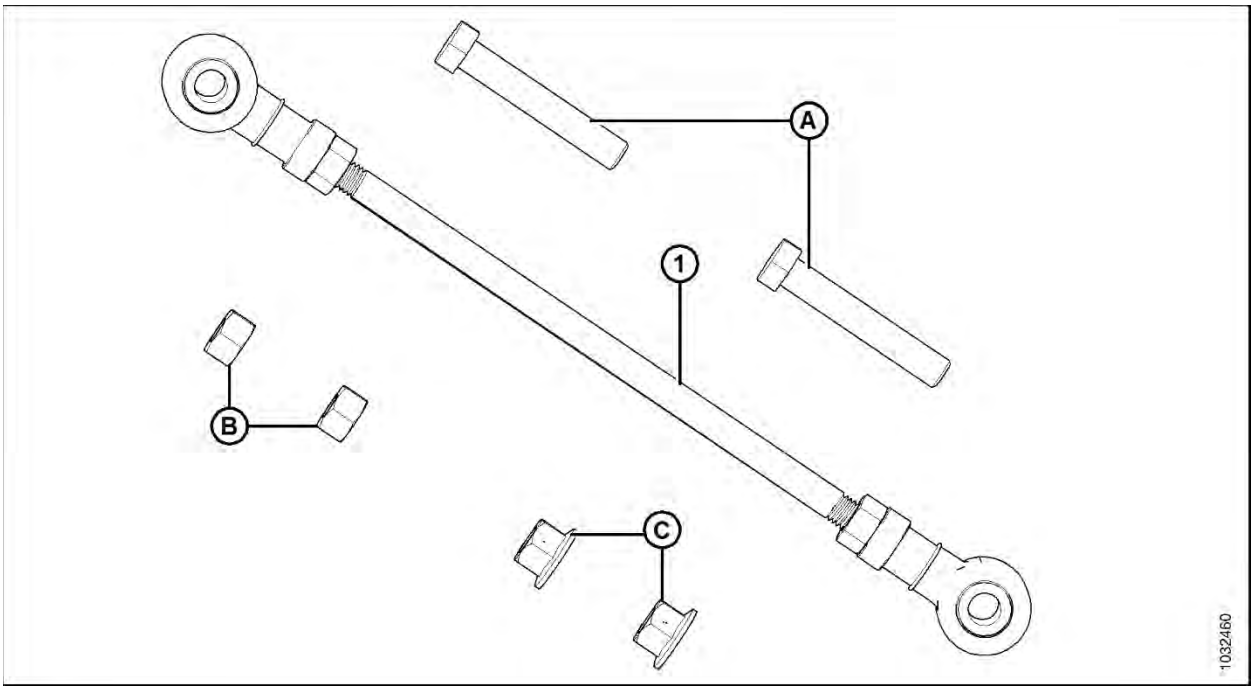

Ref	Part Number	Description	Quantity
1	160633	ROD – STEERING LINK	1
A	184675	BOLT – HEX HD M12 X 1.75 X 70-8.8-AA1J	2
B	184694	NUT – HEX M12 X 1.75-8-AA1J	2
C	136431	NUT – HEX FLG CTR LOC M12 X 1.75-10	2

Installation Instructions

To install the Steering Rod kit, follow these steps:

WARNING

To avoid injury or death from unexpected start-up of machine, always stop the engine and remove the key from the ignition before leaving the operator's seat for any reason.

NOTE: Some parts have been removed from the following illustrations for clarity.

1. Shut down the engine, and remove the key from the ignition.
2. Under the windrower and below the cab, locate the steering assembly.
3. Remove and discard lock nuts (A), nuts (B), bolts (C), washers (D) and existing steering link rod (E) from steering assembly.

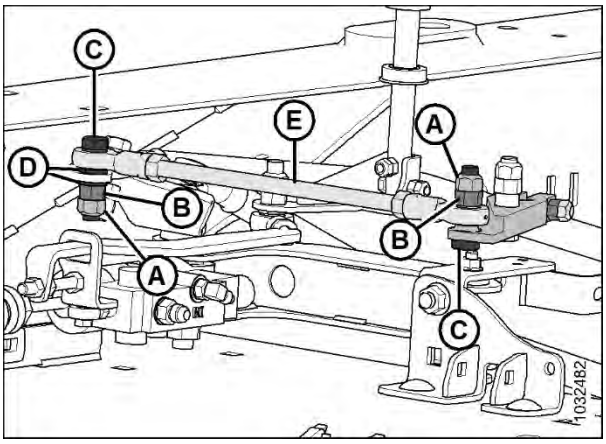

Figure 1: Existing Steering Link Rod

4. Loosen two nuts (A) securing steering arm (B) to steering shaft.

   NOTE: Steering shaft not shown in illustration at right.

5. Slide down steering arm (B) enough to position the new steering link rod and new M12 x 1.75 x 70 hex head bolt.

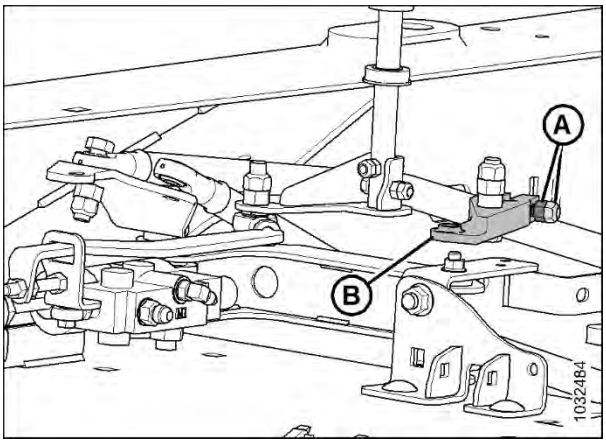

Figure 2: Steering Arm

6. Attach new steering link rod (A) (MD #160633) to steering arm (B) with new M12 x 1.75 x 70 hex head bolt (C) (MD #184675).

   NOTE: Bolts are installed from the top of steering link rod.

7. Attach the other end of new steering link rod (A) to steering shaft (D) using new M12 x 1.75 x 70 hex head bolt (E) (MD #184675).

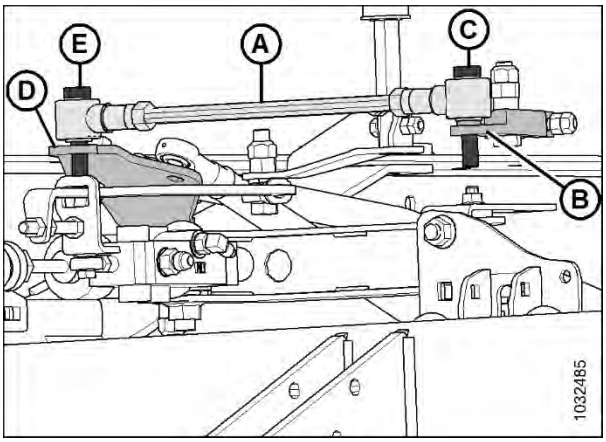

Figure 3: New Steering Link Rod

8. Slide up steering arm (A) until it is snug against the shoulder of the steering shaft.
9. Tighten nut (B) to 46 Nm (34 lbf·ft).
10. Hold nut (B) with a wrench and tighten lock nut (C) to 31 Nm (23 lbf·ft).

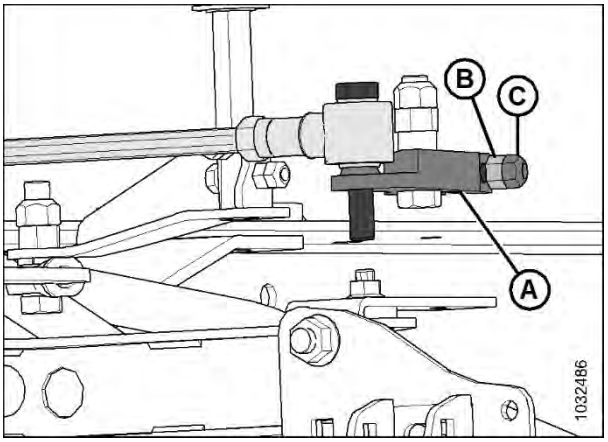

Figure 4: Steering Arm

11. Install new nuts (A) (MD #184694) and tighten to 72 Nm (53 lbf·ft).
12. Install new lock nuts (B) (MD #136431).
13. Hold nuts (A) with a wrench and tighten lock nuts (B) to 72 Nm (53 lbf·ft).

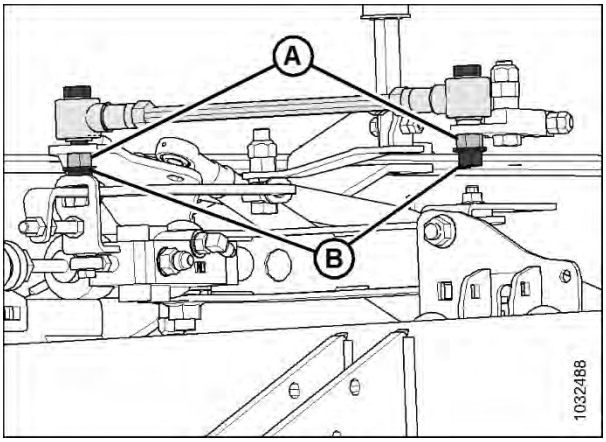

Figure 5: New Steering Rod Link

14. Torque nuts (A) on steering link rod (B) to 57 Nm (42 lbf·ft).

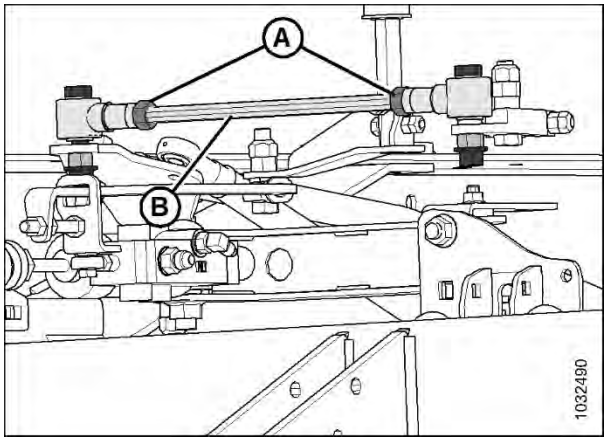

Figure 6: New Steering Link Rod Installed

© 2020 MacDon Industries, Ltd.

The information in this publication is based on the information available and in effect at the time of printing. MacDon Industries, Ltd. makes no representation or warranty of any kind, whether expressed or implied, with respect to the information in this publication. MacDon Industries, Ltd. reserves the right to make changes at any time without notice.