MacDon

CA25
Combine Adapter

Parts Catalog

147941 Revision A
Original Instruction

The harvesting specialists.

CA25 Combine Adapter

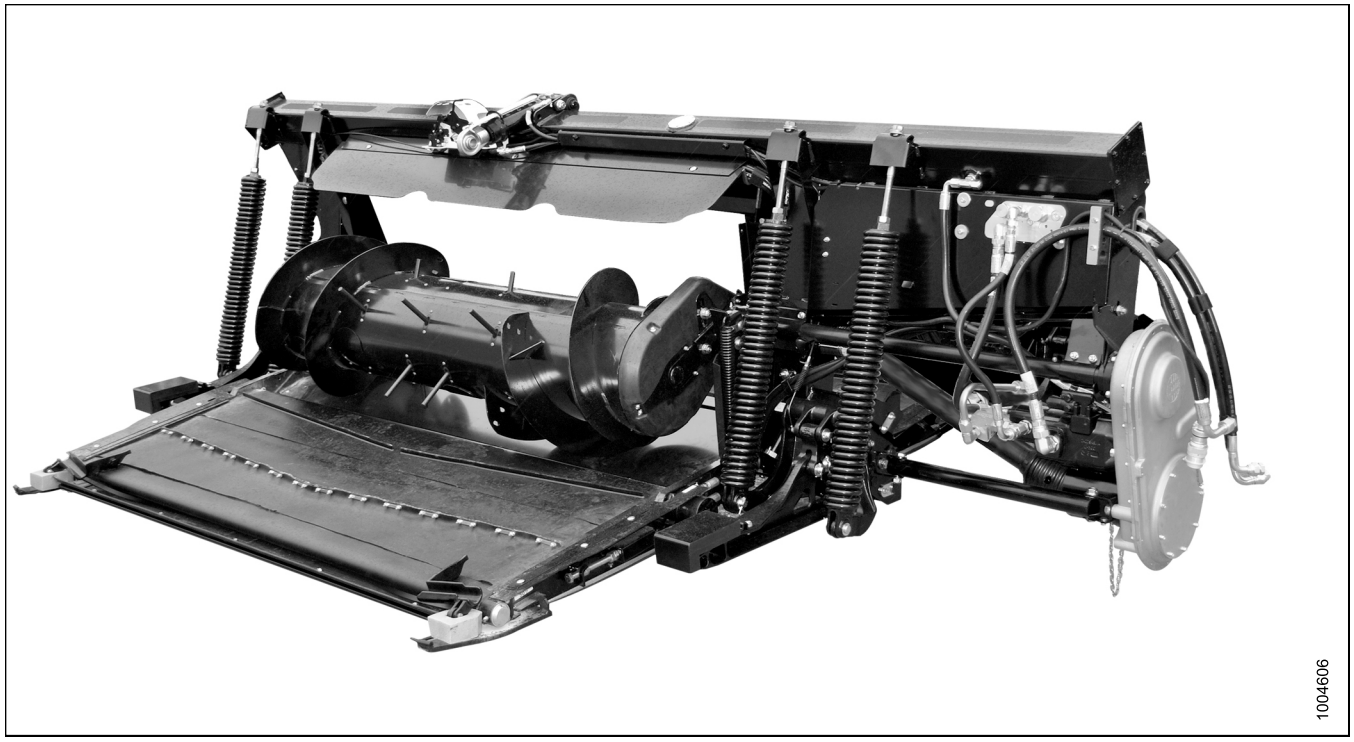

Published in July, 2016

NOTE:
Keep your MacDon publications up-to-date. The most current version can be downloaded from our website (*www.macdon.com*) or from our Dealer-only site (*https://portal.macdon.com*) (login required).

Catalog also available in French, Portuguese, and Spanish versions. The most current version can be downloaded from our MacDon International website (*www.macdon.com/world*) or from our Dealer-only site (*https://portal.macdon.com*) (login required).

TABLE OF CONTENTS

Introduction iii
Abbreviations iv
Serial Number Breaks iv
Summary of Changes – CA25 (147941 Rev. A) v

1 Frame and Components 1
2 Feed Deck 3
3 Transition Pan Poly Kit / Combine Attachment for Rigid Headers 9
4 Adapter Corner and Center Fillers 11
5 Auger Internal Components 13
6 Auger Assembly 17
7 Drives 21
8 Input Driveline 27
9 Hydraulics – Bosch Manifold 31
10 Hydraulics – Parker Manifold 35
11 Hydraulic Selector Header Tilt / Reel Fore-Aft 39
12 Selector Valve 41
13 Float Linkage and Components 43
14 Hydraulic Center-Link with Float and Tilt Indicators 47
15 Decals 51
16 Decals – French 53
17 Decals – Portuguese 55
18 Decals – Russian 57
19 Decals – Spanish 59
20 AGCO, Gleaner – Adapter Completion 61
21 AGCO, Gleaner – Hydraulic Completion 63
22 AGCO, Gleaner – Electrical Completion 67
23 Gleaner – R/S Series Feeding Kit 69
24 Gleaner – R/S Series Narrow Completion Kit 71
25 Case 20 Series – Adapter Completion 73
26 Case IH and New Holland CR/CX – Adapter Completion 75
27 Case 20 Series – Hydraulic Completion 77
28 Case IH and New Holland CR/CX – Hydraulic Completion 81
29 Case IH/20 Series and New Holland CR/CX – Electrical Completion 85
30 New Holland 10 Volt Auto Header Height Sensor 87
31 John Deere 50/60/70 Series – Adapter Completion 89
32 John Deere – Contour Master Transition Frame 91
33 John Deere 50 Series – Hydraulic Completion 93
34 John Deere 60/70 Series – Hydraulic Completion, 2016 and Prior 97
35 John Deere 60/70 Series – Hydraulic Completion, 2017 and Later 101
36 John Deere 50/60/70 Series – Electrical Completion 105
37 Lexion 500/700 Series – Adapter Completion 107
38 Lexion 500/700 Series – Hydraulic Completion 109
39 Lexion 500/700 Series – Electrical Completion 113
40 Conversion Kits 115

41 Reel Speed Sensors 117
42 Double Knife Completion Package 119
43 (Option) Auger Flighting Extensions 121
44 (Option) European Adapter Seal Kit 123
45 (Option) Hillside Extension 125
46 (Option) John Deere Adapter Fore/Aft Anti-Drift Kit 127
Index 130

Introduction

This parts catalog lists all the replacement parts that can be ordered for a MacDon CA25 Combine Adapter.

When ordering, be sure the complete and proper part number is given.

Bold text is used to indicate updates made at the current revision level. With each new revision of the catalog, previous revisions are returned to regular text.

In this catalog, right-hand (RH) and left-hand (LH) are determined from the operator's seated position in the combine. An arrow is sometimes used in illustrations to indicate forward position as shown below.

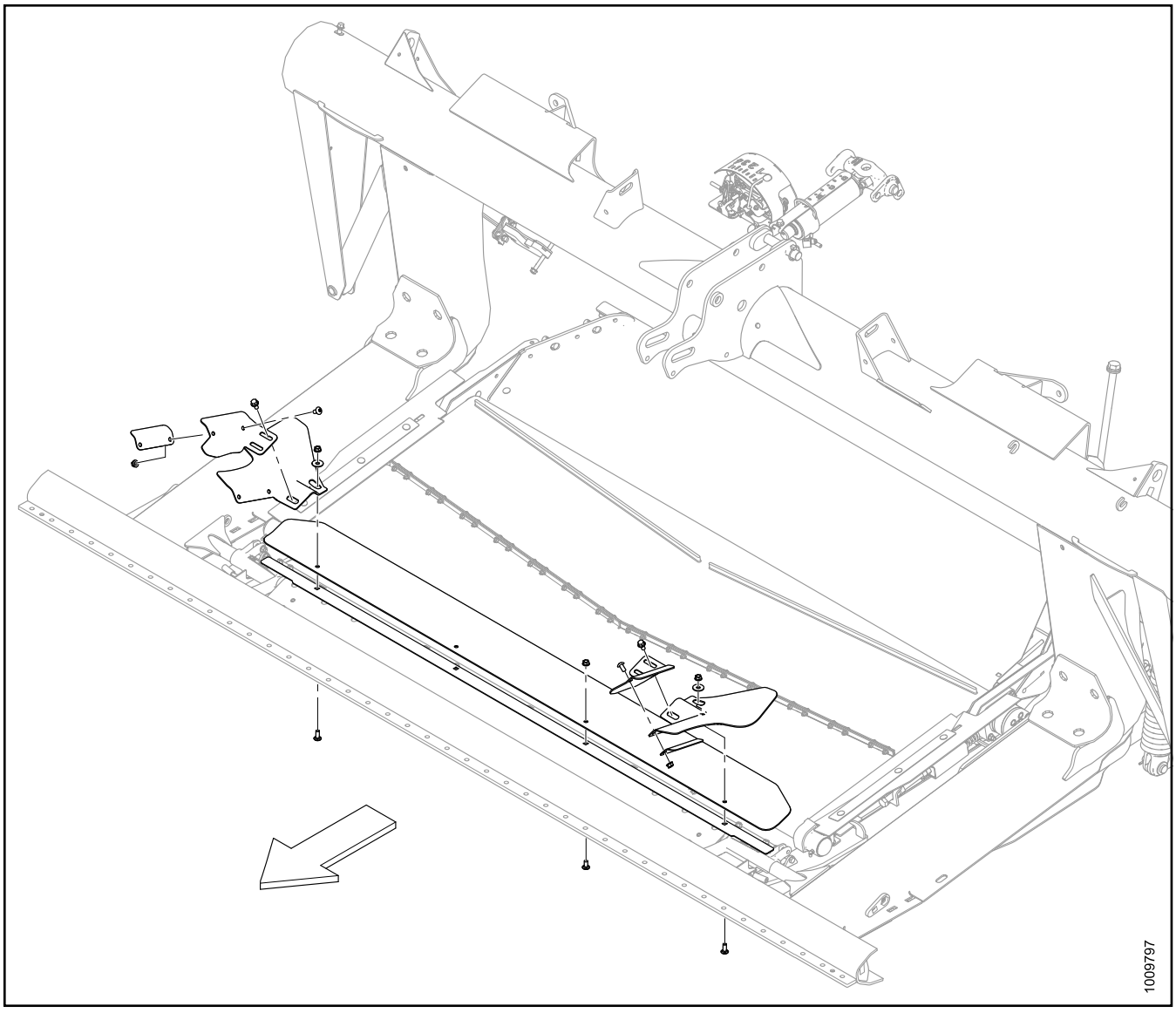

NOTE:
To order replacement parts specifically for wire harnesses, refer to the MacDon Electrical Connector Parts Catalog.

Abbreviations

A/R – as required (quantity varies)
C/W – complete with
CCW – counterclockwise
CW – clockwise
CSK – countersink
DK – double knife
DT – distorted thread
FLG – flange
GS – grass seed
MFA – manual fore-aft
I.D. – inside diameter
LH – left hand (determined from Operator's position, facing forward)
HFA – hydraulic fore-aft
NC – national coarse thread
NF – national fine thread
NSS – not serviced separately
O.D. – outside diameter
OPT – optional
PT – pull-type (mower conditioner)
REF – reference, part number called up elsewhere in catalog
RH – right hand (determined from Operator's position, facing forward)
RHSN – round head, square neck or square neck carriage bolt
RHSSN – round head, short, square neck
SER – serrated
SMV – slow moving vehicle
SK – single knife
SP – self-propelled (windrower) header
SPI – serrations per inch (knife sections)
UDK – untimed double knife

Serial Number Breaks

The side of the serial number on which the dash (–) appears determines whether the part is used "up to" or "after" the serial number given.

Example:

- –162249 Used on machines up to and including serial number 166249
- 166250– Used on machines including and after serial number 166250

Summary of Changes – CA25 (147941 Rev. A)

This list covers changes made since the last revision (147694 Rev. A).

Section	Summary of Change	Internal Use Only
Introduction, page iii	Added Electrical Connector Parts Catalog note.	Prod. Support Tech Pubs
	Updated illustration (1009797) to match current catalog style.	
2 Feed Deck, page 3	187913 and 187914 superseded by 279670 and 279671.	ECN 53540
	248560 and 248561 superseded by 245672 and 245673.	ECN 51823 Engineering Tech Pubs
	Updated descriptions of items #16, 27, and 28 with “2015 AND PRIOR” and added footnotes for clarity.	
	Created new illustration (1018260) to show pan 245675.	
4 Adapter Corner and Center Fillers, page 11	220806 superseded by 279028.	ECN 51935
	Added screw 101898, bolt 21470, and replaced washer 18963 with washer 19685.	
	Created new illustration (1018255) to reflect above changes.	
5 Auger Internal Components, page 13	Added kit 276797 as a service part for drum 133500 (item #4).	ECN 52769
	23334 replaced by 156743.	ECN 51698
	Added tee nut 123202 (hardware P) to list. Created new illustration (1018232) to show placement of tee nut.	Parts G125694
6 Auger Assembly, page 17	187813 superseded by 245966.	ECN 51698
	42894 replaced by 135597.	
	135025 superseded by 252259.	ECN 52948
	133506 replaced by 279691.	DEV 25887
	187576 and 187577 superseded by 279690 and 279658.	
	220319 superseded by 279652.	
	Added screw 135157 (hardware AG) and washer 18963 (hardware AH).	
	Added cross-reference on tee nut 123202 (hardware S).	Prod. Support Parts
	Updated illustration (1004392) to show correct view of arm 133510 (item #8).	
	Added bushing 156879 (item #31).	
	Created new illustration (1018489) to reflect above changes.	Tech Pubs

Section	Summary of Change	Internal Use Only
7 Drives, page 21	Removed “LEXION” and “EUROPE” from description of 187475, added “LEXION” to description of 187497.	Engineering G125962
	Added optional sprocket kits 187523–187525 to list (item #15).	Prod. Support
	Added part numbers 187481 and 187479 to items #26 and 27.	ECN 52574
	187467 and 187469 superseded by 213830 and 279689.	DEV 25887
	133441 superseded by 279081.	ECN 52080
	Added footnotes to pump 187517 (item #36) and pump 187229 (item #39) to clarify combine compatibility of each pump.	ECN 51591 Tech Pubs
	Added 19 CC gear pump 245301 (item #37) to list.	ECN 52451
	Added hub 245804 (item #47) and hub 245805 (item #48) as service parts for Bosch/Rexroth and Sauer/Danfoss pumps.	ECN 51105
	Replaced all instances of “BOSCH” and “SAUER” with “BOSCH/REXROTH” and “SAUER/DANFOSS” respectively.	Engineering
	Added missing callout to bolt 21456 (hardware M) attaching items #7 and 8 to item #27.	Prod. Support
	Corrected part number of hardware W from 18652 to 18637.	Tech Pubs
	Created new illustration (1018289) to reflect above changes.	
9 Hydraulics – Bosch Manifold, page 31	Replaced Parker manifold 245119 with 279490 in footnote for manifold repair kit 248245 (item #41).	ECN 52758
10 Hydraulics – Parker Manifold, page 35	245119 and 220594 superseded by 279490 and 279491 respectively. Replaced all instances of “245119” in part descriptions with “279490”.	
12 Selector Valve, page 41	Added harnesses 129566 and 156614, which replace harness 220337 for John Deere 50 Series combines. Created new illustration (1018254) to show harnesses.	ECN 51965 G125969
14 Hydraulic Center-Link with Float and Tilt Indicators, page 47	Added clip 153492 to list (item #28) and updated illustration (1004401).	Parts
15 Decals, page 51	Added decal 245978 (item #13). Created new illustration (1018250) to show decal.	ECN 51746
20 AGCO, Gleaner – Adapter Completion, page 61	Corrected bundle number for Gleaner “R” and “S” Series Completion Package in Note underneath parts list from B5671 to B5761.	Prod. Support B5667
	Added Gleaner transition frame 245852 to list (item #1), removed “GLEANER” from AGCO transition frame 133672.	ECN 50309 Engineering
	Added AGCO fillers 133980, 133981, and bolt 105069.	
	Created new illustration (1018496) to reflect above changes.	

Section	Summary of Change	Internal Use Only
21 AGCO, Gleaner – Hydraulic Completion, page 63	Corrected quantities of fasteners 40701, 40702, 49227, and 135444.	ECN 52321 ECN 48778 Engineering
	129149 replaced by 187018.	
	Added disc 133165, bracket 133166, and bolt 19965.	
	Created new illustration (1018497) to reflect above changes.	
22 AGCO, Gleaner – Electrical Completion, page 67	Added footnotes to fasteners 21763 and 16661 (item #1) to list separate quantities for 2016 and prior model year combines, and 2017 and later model year combines.	
23 Gleaner – R/S Series Feeding Kit, page 69	B5848 superseded by B6151.	ECN 52121
	Added deflector 245757 (item #5) to list. Created new illustration (1018243) to show deflector 245757.	ECN 50309 Engineering
	Added “STAINLESS STEEL” to description of deflector 245757.	Prod. Support
24 Gleaner – R/S Series Narrow Completion Kit, page 71	133692 and 133698 replaced by 245815 and 245816 respectively. Added 245703, 21282, 18589, and 18597.	ECN 50309 Engineering
	Added lock washer 18636.	ECN 52406
	Created new illustration (1018248) to reflect above changes.	Tech Pubs
26 Case IH and New Holland CR/CX – Adapter Completion, page 75	156366 superseded by 279493.	ECN 52511
	Added deflectors 187390, 187391, 187415, and 187416 to list (items #7 and 8).	G220404
	Added bolt 21868 (hardware H) to list.	
	Created new illustration (1018268) to reflect above changes.	
27 Case 20 Series – Hydraulic Completion, page 77	43848 replaced by 252559.	ECN 52622
28 Case IH and New Holland CR/CX – Hydraulic Completion, page 81	Corrected quantities of fasteners 21763, 40701, 40702, 49227, 49232, and 135444.	ECN 52321 Engineering Parts
	Updated description of hose 133260 (item #8).	
	Added bolt 197319 and nut 197320 (hardware H and J) to list.	
	Added disc 133165, bracket 133166, and bolt 19965.	
	Created new illustration (1018226) to reflect above changes.	
29 Case IH/20 Series and New Holland CR/CX – Electrical Completion, page 85	Replaced screw 42292 with bolt 197319 and nut 197320 (hardware E and F). Created new illustration (1018319) to show 197319 and 197320.	
31 John Deere 50/60/70 Series – Adapter Completion, page 89	151926 superseded by 220628.	
	B5669 replaced by B6202 for 2017 and later model year combines. B5669 remains available to service 2016 and prior model year combines.	
32 John Deere – Contour Master Transition Frame, page 91	245667 superseded by 279252. Created new illustration (1018303) to show new transition frame.	ECN 51530 Engineering
	Added B5833 (2016–Prior) and B6206 (2017–Later) to Note.	

Section	Summary of Change	Internal Use Only
34 John Deere 60/70 Series – Hydraulic Completion, 2016 and Prior, page 97	B5669 replaced by B6202 for 2017 and later model year combines. B5669 remains available to service 2016 and prior model year combines.	ECN 52321 Engineering
	Added kits 279011–279017 as service parts for coupling 129120 (item #1). Added Parker coupling 245820 as an interchangeable option for 129120. Replaced seals 129859 and 129860 with 279034 and 279035 respectively.	ECN 51319 Prod. Support
	Corrected callout 22 to callout 23 in center of illustration (1004423). Item #22 is a clamp and item #23 was not called out in the illustration.	
	Replaced “60 Series” with “(FASTER)” in description of 129120.	Parts
35 John Deere 60/70 Series – Hydraulic Completion, 2017 and Later, page 101	Added new section for 2017 and later model year combine hydraulic completion package (B6202).	ECN 52321 Engineering Parts
36 John Deere 50/60/70 Series – Electrical Completion, page 105	B5669 replaced by B6202 for 2017 and later model year combines. B5669 remains available to service 2016 and prior model year combines.	
37 Lexion 500/700 Series – Adapter Completion, page 107	Updated illustration (1004425) with shaded link tubes 156783 (item #10) for clarity.	
38 Lexion 500/700 Series – Hydraulic Completion, page 109	Added O-ring 44210 as a service part for fitting 30695 (item #7).	
	Corrected quantities of fasteners 40701, 40702, 49227, 49232, and 135444.	
	Corrected callouts for hoses 156758, 156759, and 133260 (items #2–4).	
	Added disc 133165, bracket 133166, and bolt 19965.	
	Removed nut F from bolt D and added nut E to bolt B.	
	Created new illustration (1018485) to reflect above changes.	
39 Lexion 500/700 Series – Electrical Completion, page 113	Replaced 220396 with NSS (not serviced separately) as harness 220396 is replaced by harness 220354. Added footnote for clarity.	
	Replaced screw 42292 with bolt 197319 (hardware A) and added nut 197320 (hardware G).	
	Added screw 158704 (hardware H).	
	Created new illustration (1018320) to reflect above changes.	
41 Reel Speed Sensors, page 117	133998 superseded by 279746.	ECN 53657
44 (Option) European Adapter Seal Kit, page 123	187856, 187857, 220122, and 220123 superseded by 245912, 245891, 245910, and 245892 respectively.	ECN 51597 Parts
	Added missing callout A to nut 30228 below bar 220307.	
	Created new illustration (1018238) to reflect above changes.	
45 (Option) Hillside Extension, page 125	Added new section for Hillside Extension kit.	ECN 50525 ECN 52072

Section	Summary of Change	Internal Use Only
46 (Option) John Deere Adapter Fore/Aft Anti-Drift Kit, page 127	Added new section for John Deere Adapter Fore/Aft Anti-Drift kit for 2016 and prior model year combine adapters.	ECN 52477 Engineering
Throughout	Updated forward position arrow in illustrations for consistency.	Tech Pubs

1 Frame and Components

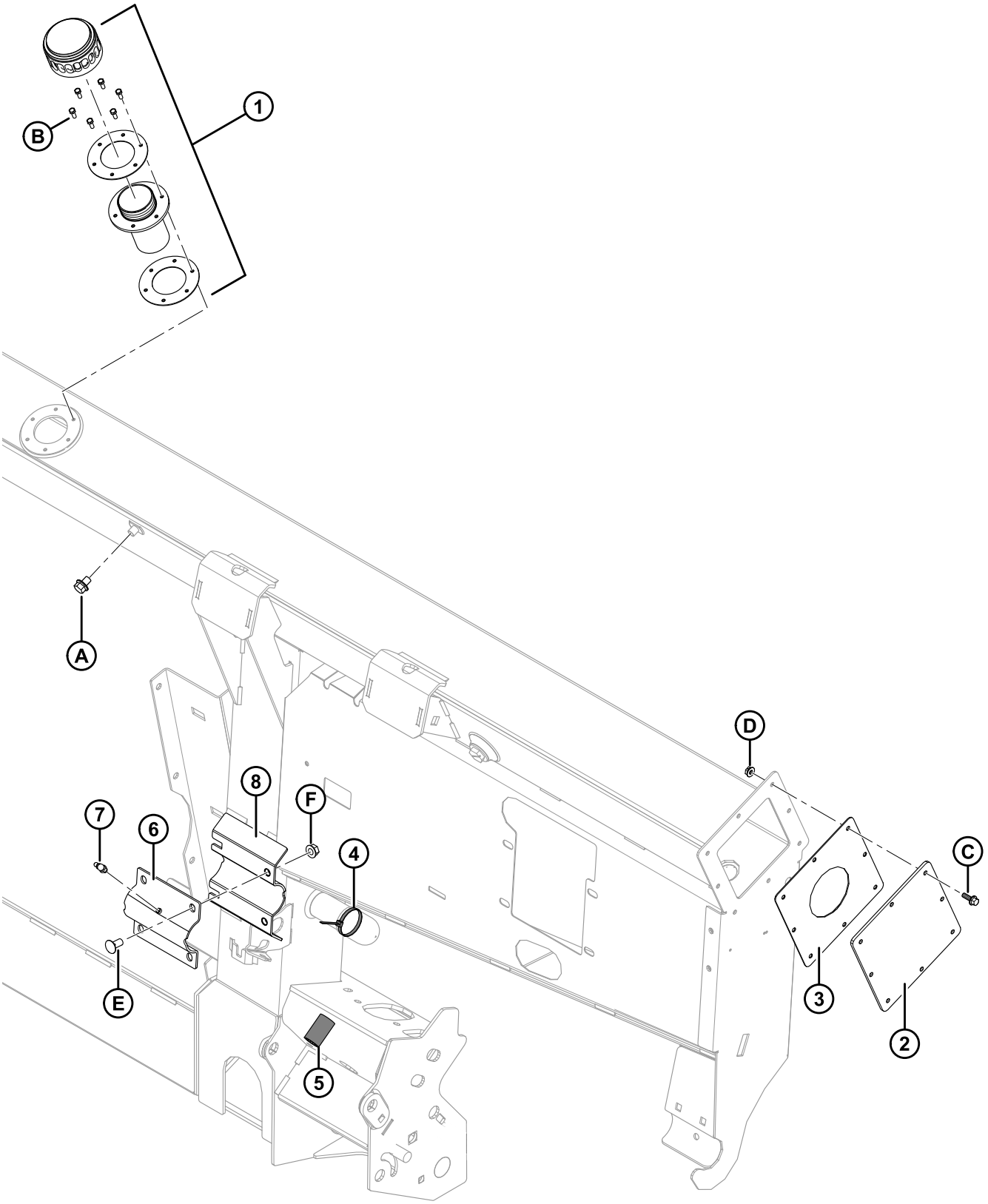

FRAME AND COMPONENTS

Ref	Part Number	Description	Qty	Serial Number
1	133942	CAP – OIL FILLER [1]	1	
2	187101	PLATE – END COVER	2	
3	187112	GASKET	2	
4	21763	FASTENER – CABLE TIE (BLACK)	2	
5	156695	TUBE	1	
6	123629	CLAMP – AUGER PIVOT ASSEMBLY	1	
7	21010	FITTING – LUBE 90° 1/4-28 TAPER THD	1	
8	156682	BRACKET – SUB WELDT (WELDED TO FRAME)	1	
A	30693	BOLT – FLANGE (SER FACE) .375-16 UNC X 0.50 LG		
B	135873	SCREW – MACH #10-32 X 0.5 IN. HEX [2]		
C	21456	BOLT – HH FLG (SER FACE) 1/4 NC X 0.75 GR 5 ZP		
D	135248	NUT – FLG SMTH FACE 1/4-20 NC GR 5 ZP CTR LK DT THD		
E	21863	BOLT – RHSSN 3/8 NC X 0.75 LG GR 5 ZP		
F	30228	NUT – FLANGE DT SMOOTH FACE 0.375-16 UNC		

1. Remove cap and gasket covering fill hole during shipping (not shown). Retain six screws (MD #135873). Replace with oil filler cap (MD #133942) which comes complete with oil cap, filler neck, and gaskets. Use six screws saved from shipping cap to attach oil filler cap to frame. Oil filler cap comes shipped with frame or can be ordered as a replacement.
2. Comes shipped with cap and gasket covering fill hole during shipping. Can be ordered separately if needed as a replacement.

2 Feed Deck

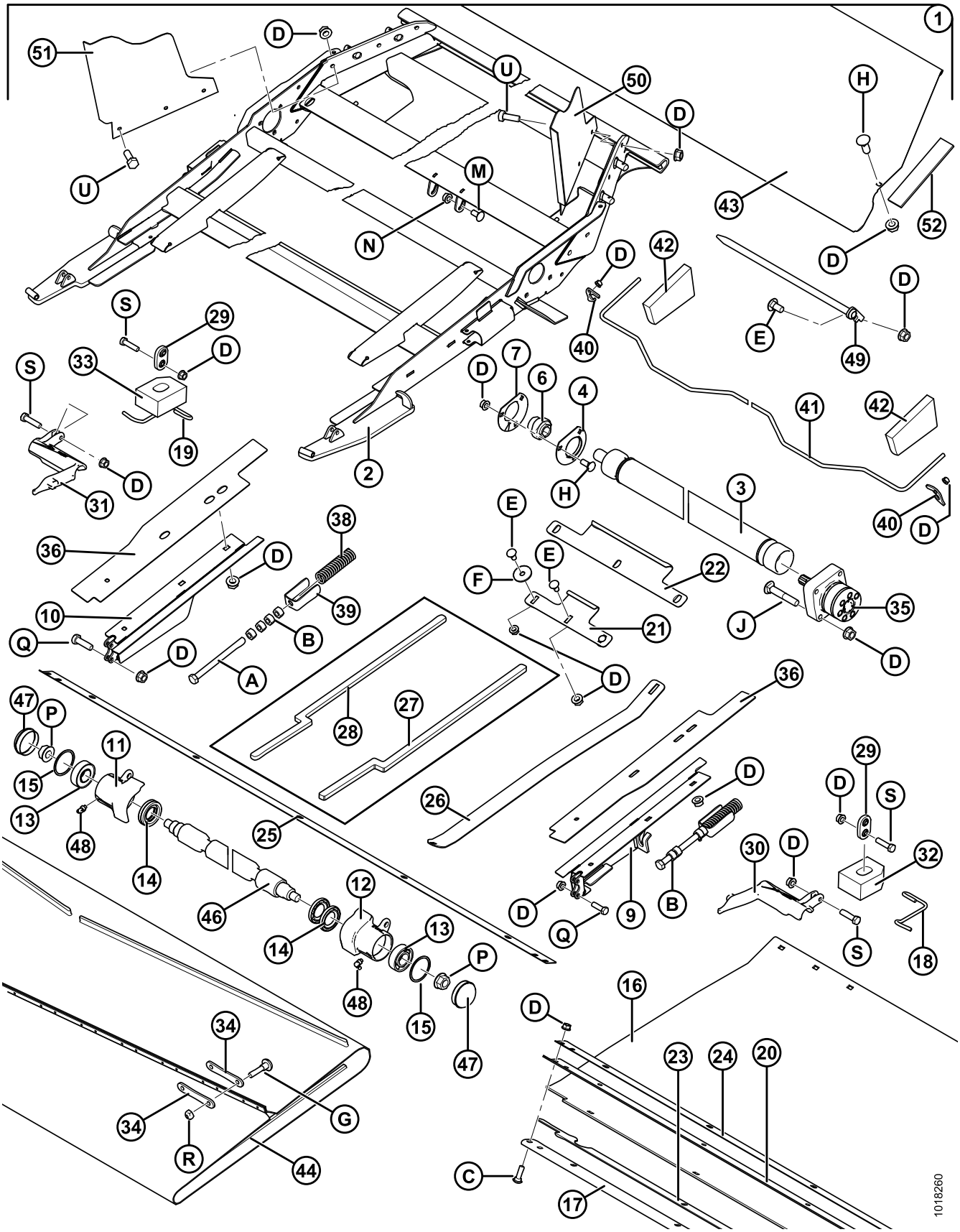
1
2
3
4
6
7
9
10
11
12
13
14
15
16
17
18
19
20
21
22
23
24
25
26
27
28
29
30
31
32
33
34
35
36
38
39
40
41
42
43
44
46
47
48
49
50
51
52
A
B
C
D
E
F
G
H
J
M
N
P
Q
R
S
U
1018260

FEED DECK

Ref	Part Number	Description	Qty	Serial Number
1	245673	ASSY – ADAPTER FEED DECK COMPLETE	1	
2	245672	CARRIER – FEED DECK WELDMENT	1	
3	133891	ROLLER – DRIVE (COATED)	1	
4	100589	FLANGE – CROPPED	1	
6	21859	BEARING – SPH OD EXT INNER RACE 1-3/16 BORE	1	
7	100590	FLANGE – CROPPED	1	
9	**279670**	**IDLER ARM – WELDT (LH)**	**1**	
10	**279671**	**IDLER ARM – WELDT (RH)**	**1**	
11	133124	HOUSING ASSY – IDLER CUP (RH)	1	
12	133126	HOUSING ASSY – IDLER CUP (LH)	1	
13	118185	BEARING – BALL CYL, 52 MM O.D., 25 MM I.D.	2	
14	100862	SEAL – OIL	4	
15	118011	RING – RETAINING INTERNAL	2	
16	220446	PAN – POLY **(2015 AND PRIOR)** [3]	**A/R**	–285420
	245675	PAN – POLY	1	
17	156563	BAR	1	
18	156704	ROD – HINGE (LH)	1	
19	133367	ROD – HINGE (RH)	1	
20	156773	SEAL	1	
21	220447	HOOK – REAR	2	
22	133900	HOOK – REAR (CENTER)	1	
23	220449	BAR – POLY PAN (FRONT)	1	
24	220380	STRAP – FRONT	1	
25	220381	STRAP – FRONT LOWER	1	
26	220237	SUPPT – POLY PAN (LIFTER)	3	
27	220339	BLOCK – FOAM DECK, LH **(2015 AND PRIOR)** [4]	**A/R**	–285420
28	220342	BLOCK – FOAM DECK, RH **(2015 AND PRIOR)** [4]	**A/R**	–285420

3. Service part only for 2015 and prior model year combine adapters that have not been serviced with feed deck carrier (MD #245672) or complete feed deck assembly (MD #245673). For 2016 and later model year combine adapters, or for combine adapters that have been serviced with carrier (MD #245672) or feed deck assembly (MD #245673), order poly pan (MD #245675).
4. Service part only for 2015 and prior model year combine adapters that have not been serviced with feed deck carrier (MD #245672) or complete feed deck assembly (MD #245673). Not required on 2016 and later model year combine adapters, or for combine adapters that have been serviced with carrier (MD #245672) or feed deck assembly (MD #245673).

FEED DECK

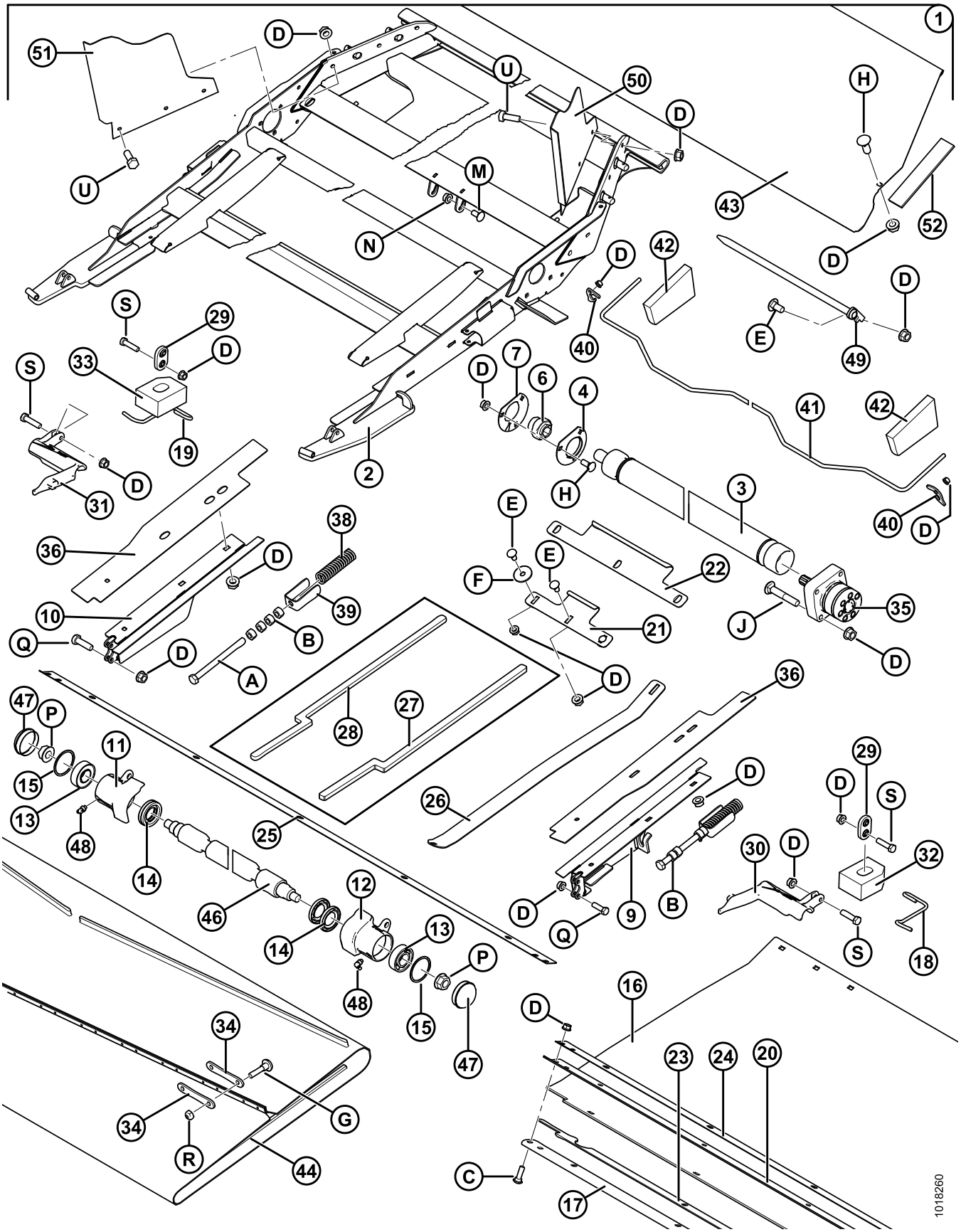
1
2
3
4
6
7
9
10
11
12
13
14
15
16
17
18
19
20
21
22
23
24
25
26
27
28
29
30
31
32
33
34
35
36
38
39
40
41
42
43
44
46
47
48
49
50
51
52
A
B
C
D
E
F
G
H
J
M
N
P
Q
R
S
U
1018260

FEED DECK

Ref	Part Number	Description	Qty	Serial Number
29	187732	LINK – HOOK ASSY	2	
30	123935	SUPPORT – ADAPTER LINK MACHINED (LH)	1	
31	123936	SUPPORT – ADAPTER LINK MACHINED (RH)	1	
32	220338	BLOCK – FOAM SKID (LH)	1	
33	220343	BLOCK – FOAM SKID (RH)	1	
34	130283	STRAP – DRAPER CONN	28	
35	245122	MOTOR – HYDRAULIC, PARKER (4 BOLT)	1	
36	187948	SEAL – FEED DRAPER (POLY)	2	
38	133946	SPRING – COMPRESSION	2	
39	130246	RETAINER – SPRING	2	
40	156365	LATCH	2	
41	156363	HANDLE	1	
42	133892	PLUG	2	
43	220852	PAN – STAINLESS STEEL	1	
44	133131	DRAPER	1	
46	156286	SHAFT – IDLER ROLLER	1	
47	133372	CAP – DUST	2	
48	21301	FITTING – LUBRICATION	2	
49	187947	PIN – WELDT	2	
50	151971	DEFLECTOR – POLY (LH)	1	
51	151376	DEFLECTOR – POLY (RH)	1	
52	248469	SEAL – FOAM	2	

FEED DECK

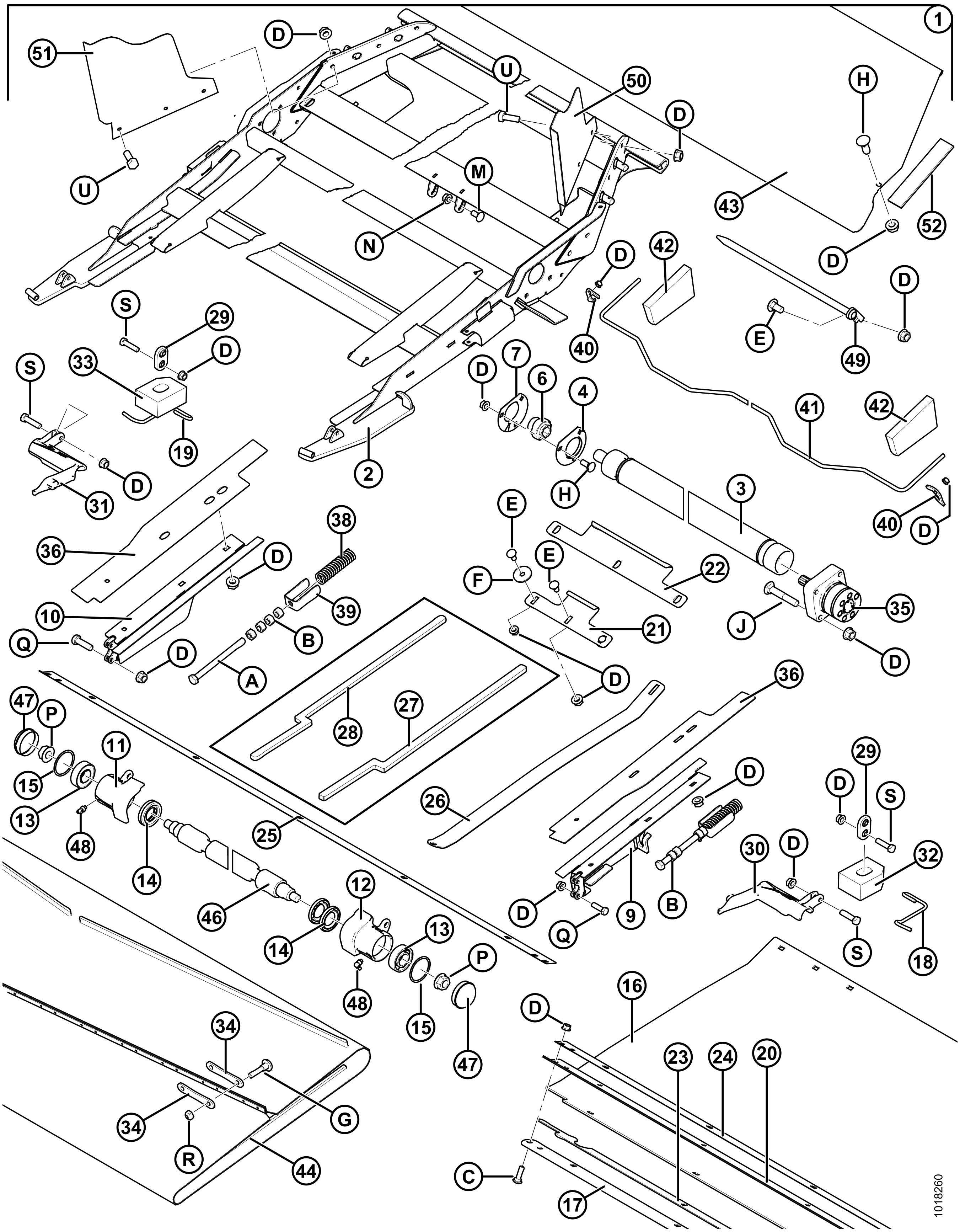

1
2
3
4
6
7
9
10
11
12
13
14
15
16
17
18
19
20
21
22
23
24
25
26
27
28
29
30
31
32
33
34
35
36
38
39
40
41
42
43
44
46
47
48
49
50
51
52
A
B
C
D
E
F
G
H
J
M
N
P
Q
R
S
U
1018260

FEED DECK

Ref	Part Number	Description	Qty	Serial Number
A	135906	BOLT – HH 5/8 NC X 7.5 LG TFL GR 5 ZP		
B	18592	NUT – HEX 5/8-11 UNC GR 5 ZP		
C	19966	BOLT – RHSN 3/8 NC X 1.25 LG GR 5 ZP		
D	30228	NUT – FLANGE DT SMOOTH FACE 0.375-16 UNC		
E	21472	BOLT – RHSN 3/8 NC X 0.75 GR 5 ZP		
F	16652	WASHER – FLAT		
G	135630	SCREW – BHRN #12-24 NCX 0.920 IN. LG (50 PACK) [5]		
H	19965	BOLT – RHSN 3/8 NC X 1.0 GR 5 ZP		
J	21485	BOLT – RHSN 3/8 NC X 2.25 LG GR 5 ZP		
M	21863	BOLT – RHSSN 3/8 NC X 0.75 LG GR 5 ZP		
N	21452	NUT – FLANGE (SER FACE) .375-16 UNC		
P	50225	NUT – FLANGE DT SMOOTH FACE 0.625-11 UNC		
Q	21264	BOLT – HH 3/8 NC X 1.25 LG GR 5 ZP		
R	135626	NUT – CSK CENTER LOCK #12-24 NC (50 PACK) [6]		
S	21561	BOLT – HH 3/8 NC X 1.5 LG GR 5 ZP		
U	20077	BOLT – HEX HD 3/8 NC X 1.0 LG GR 5 ZP		

5. Can be ordered as a quantity of one (MD #49671).
6. Can be ordered as a quantity of one (MD #30669).

3 Transition Pan Poly Kit / Combine Attachment for Rigid Headers

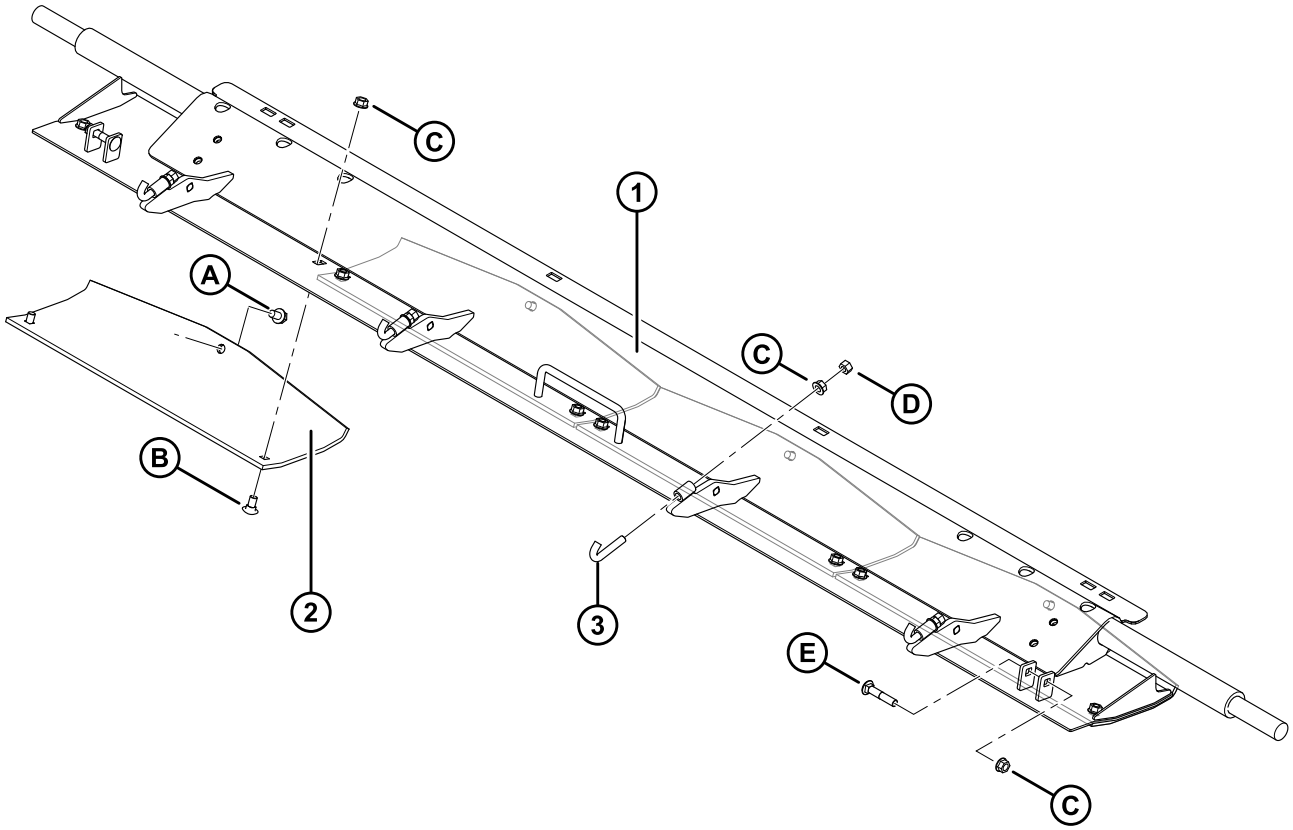

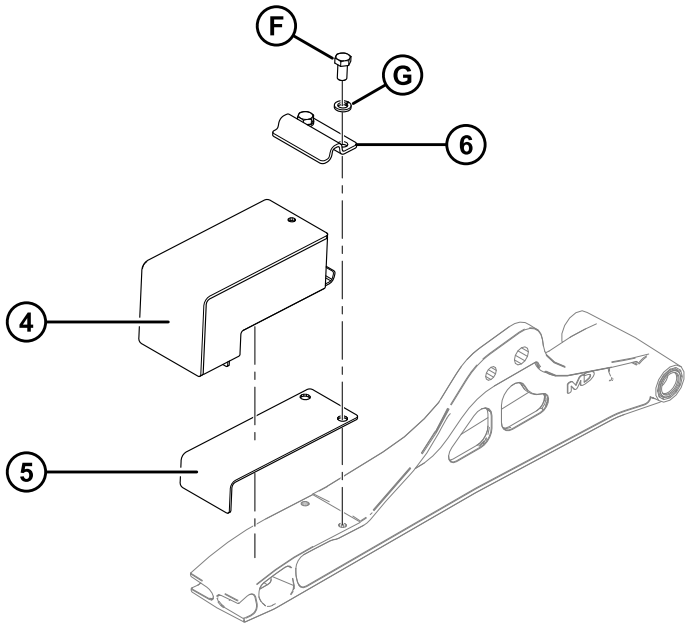

1004694

TRANSITION PAN POLY KIT / COMBINE ATTACHMENT FOR RIGID HEADERS

Ref	Part Number	Description	Qty	Serial Number
	B4828	KIT – TRANSITION PAN POLY [7]		
1	187988	PAN – RIGID TRANSITION, WELDMENT	1	
2	151551	SHOE – SKID	4	
3	156868	J-BOLT – 3/8 NC	4	
A	101898	SCREW – HEX WASH HD THD ROLLING 3/8 NC X 5/8		
B	21472	BOLT – RHSN ASME B18.5		
C	30228	NUT – FLANGE DT SMOOTH FACE 0.375-16 UNC		
D	18590	NUT – HEX 3/8-16 UNC GR 5 ZP		
E	21470	BOLT – RHSN 3/8 NC X 2.0 LG GR 5 ZP		
	B5663	KIT – COMBINE ATTACH PACK. FOR RIGID HEADERS [8]		
4	174775	BLOCK ASSY – RUBBER RIGID	2	
5	125145	PLATE – LEAF SPRING	2	
6	125146	CLAMP	2	
F	21575	BOLT – HH 1/2 NC X 1.0 LG GR 5 ZP		
G	18638	WASHER – REG. LOCK 1/2 IN. NOM. I.D. ZP		

7. Includes four skid shoes (MD #151551) and hardware (MD #101898, 21472, and 30228). Kits available through Whole Goods only.
8. Includes transition pan poly kit (MD #B4828), block (MD #174775), plate (MD #125145), clamp (MD #125146), hardware (MD #21575, 18638) and adapter corner fillers. Refer to Section *4 Adapter Corner and Center Fillers, page 11*, items #1–4 and hardware A–B. Kits available through Whole Goods only.

4 Adapter Corner and Center Fillers

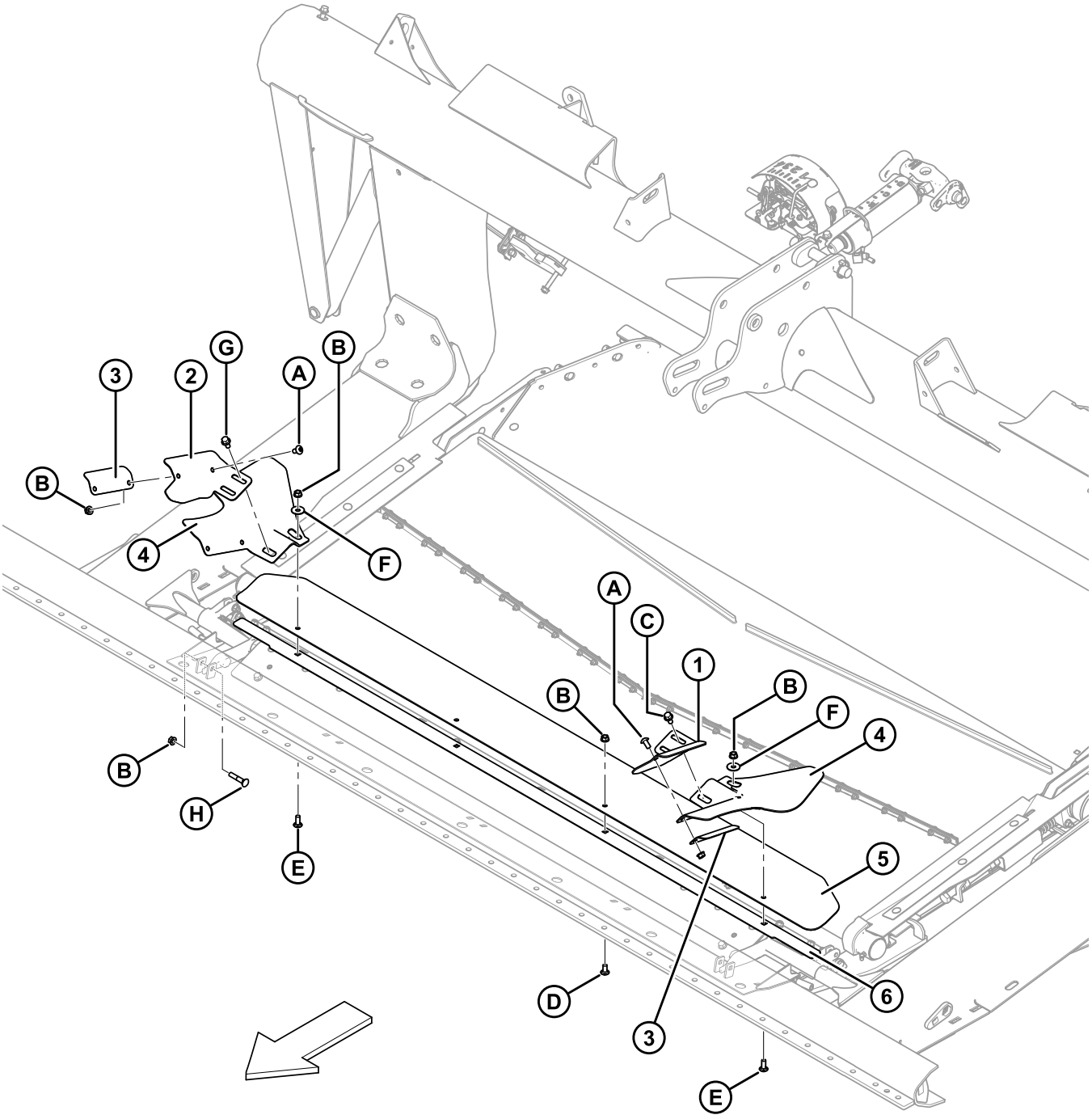

1018255

ADAPTER CORNER AND CENTER FILLERS

Ref	Part Number	Description	Qty	Serial Number
	279028	**KIT – CORNER AND CENTER FILLER** [9]		
1	123613	SUPPORT – CORNER FILLER (LH)	1	
2	123614	SUPPORT – CORNER FILLER (RH)	1	
3	123647	RETAINER – CORNER FILLER FLAP	2	
4	187928	FLAP – CORNER FILLER	2	
5	220199	FLAP – CENTER FILLER	1	
6	220200	RETAINER – CENTER FLAP	1	
A	135157	SCREW – MACHINE		
B	30228	NUT – FLG DT SMOOTH FACE 0.375-16 UNC		
C	21821	BOLT – HH FLG (SER FACE) 3/8 NC X 0.75 GR 5 ZP		
D	21863	BOLT – RHSSN 3/8 NC X 0.75 LG GR 5 ZP		
E	100456	BOLT – RHSSN 3/8 NC X 1.0 GR 5 ZP		
F	**19685**	**WASHER – FLAT**		
G	**101898**	**SCREW – HEX WASH HD THD ROLLING 3/8 NC X 5/8**		
H	**21470**	**BOLT – RHSN 3/8 NC X 2.0 LG GR 5 ZP**		

9. Includes all listed parts and hardware.

5 Auger Internal Components

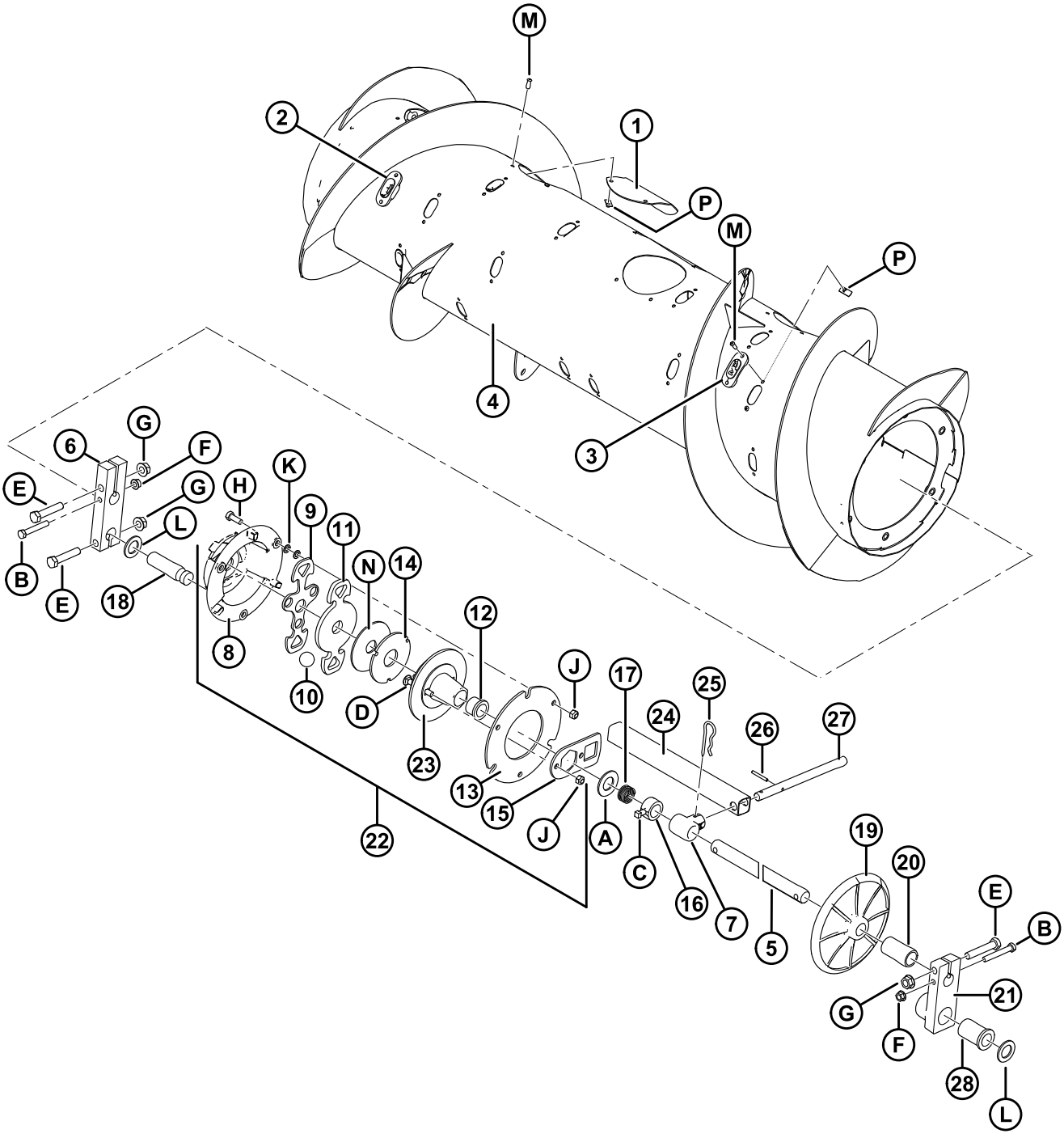

1018232

AUGER INTERNAL COMPONENTS

Ref	Part Number	Description	Qty	Serial Number
	133490	COMPLETE AUGER ASSEMBLY [10]		
	114382	KIT – RTD FINGER HOLE REPAIR [11]		
1	123087	COVER WELDMENT	5	
2	187081	GUIDE	17	
3	187137	PLUG	10	
4	133500	DRUM – 14 IN. WELDMENT	1	
	276797	**KIT – AUGER FLIGHTING SERVICE** [12]	**A/R**	
5	187620	SHAFT – AUGER FINGERS	1	
6	133519	BLOCK – AUGER SHAFT	1	
7	123055	BUSHING – RTD FINGER	26	
8	133783	HOUSING – MACHINING	1	
9	156744	PLATE – BALL CAGE	1	
10	156749	BALL	3	
11	156745	ARM – CLUTCH ACTIVATOR MACHINING	1	
12	133877	BUSHING – PLASTIC FLANGED 1.0 IN.	1	
13	156750	DISC – BRAKE	1	
14	133949	PLATE – FRICTION, CLUTCH	1	
15	156426	BAR	1	
16	151792	COLLAR – LOCK	1	
17	156803	SPRING – COMPRESSION	1	
18	133515	PIN – PIVOT	1	
19	156865	WHEEL	1	
20	156869	SPACER TUBE – PLASTIC	1	
21	156116	PIVOT BLOCK – AUGER, MACHINED	1	
22	156747	CLUTCH ASSEMBLY	1	
23	133883	BRAKE – DISK, ASSY	1	
24	133223	TUBE – SQUARE	1	
25	123180	PIN – HAIR	17	
26	7642	PIN – SPRING 3/16 DIA X 1.5 LG	17	
27	220938	FINGER ASSEMBLY (BOX OF 5) [13]	17	
28	156879	BUSHING – FLANGE	1	

10. Includes all listed parts from Section *5 Auger Internal Components, page 13* and items 1-11, 14-18, 20-27, 29, A-W, Y, AA-AB, AD-AE.
11. Used to repair damage to drum around finger guides. Kit includes all necessary parts and full instructions. Welding required.
12. Used to replace damaged auger flighting. Kit includes all necessary parts and full instructions.

AUGER INTERNAL COMPONENTS

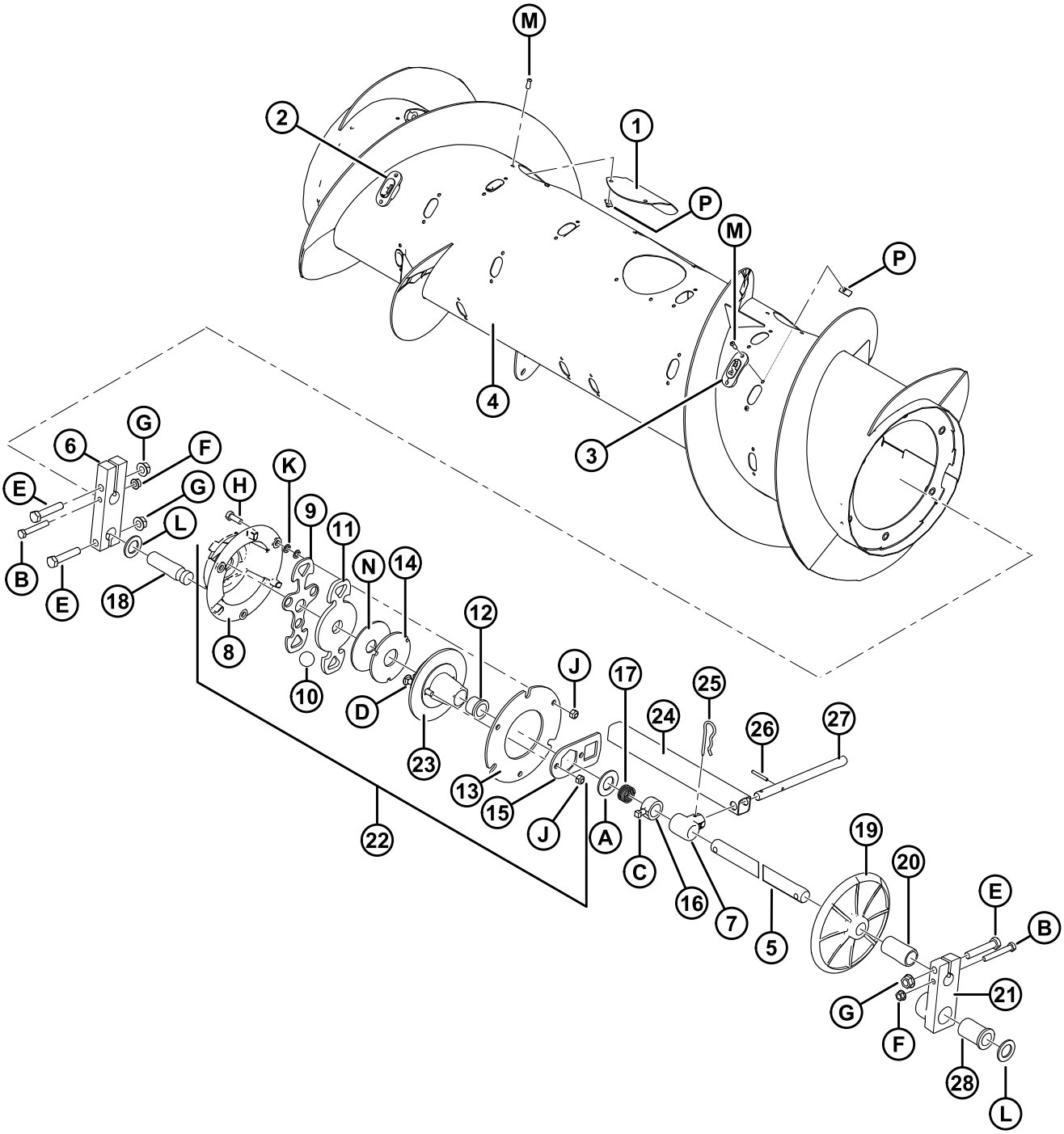

1018232

AUGER INTERNAL COMPONENTS

Ref	Part Number	Description	Qty	Serial Number
A	135522	WASHER – STAINLESS STEEL		
B	21102	BOLT – HH 3/8 NC X 2.5 LG GR 5 ZP		
C	21248	SCREW – SET SQ HD CUP PT (KNURL OPT) 3/8 NC X 3		
D	21478	BOLT – RHSN 3/8 NC X 2.5 LG GR 5 ZP		
E	21760	BOLT – HH 1/2 NC X 2.5 LG GR 5 ZP		
F	30228	NUT – FLANGE DT SMOOTH FACE 0.375-16 UNC		
G	50186	NUT – FLANGE LOCK SM FACE DT 0.500-13 UNC GR 5		
H	20077	BOLT – HEX HD 3/8 NC X 1.0 LG GR 5 ZP		
J	18669	NUT – HEX LOCK DT 3/8-16 UNC ZP		
K	133521	WASHER – 3/8 X 5/8 , 0.062		
L	**156743**	**WASHER – FLAT**		
M	123084	SCREW – HEX SOCKET BUTTON HD		
N	156799	WASHER – PLASTIC (POLYETHYLENE)		
P	**123202**	**NUT – TEE**		

13. Includes pin (MD #7642).

6 Auger Assembly

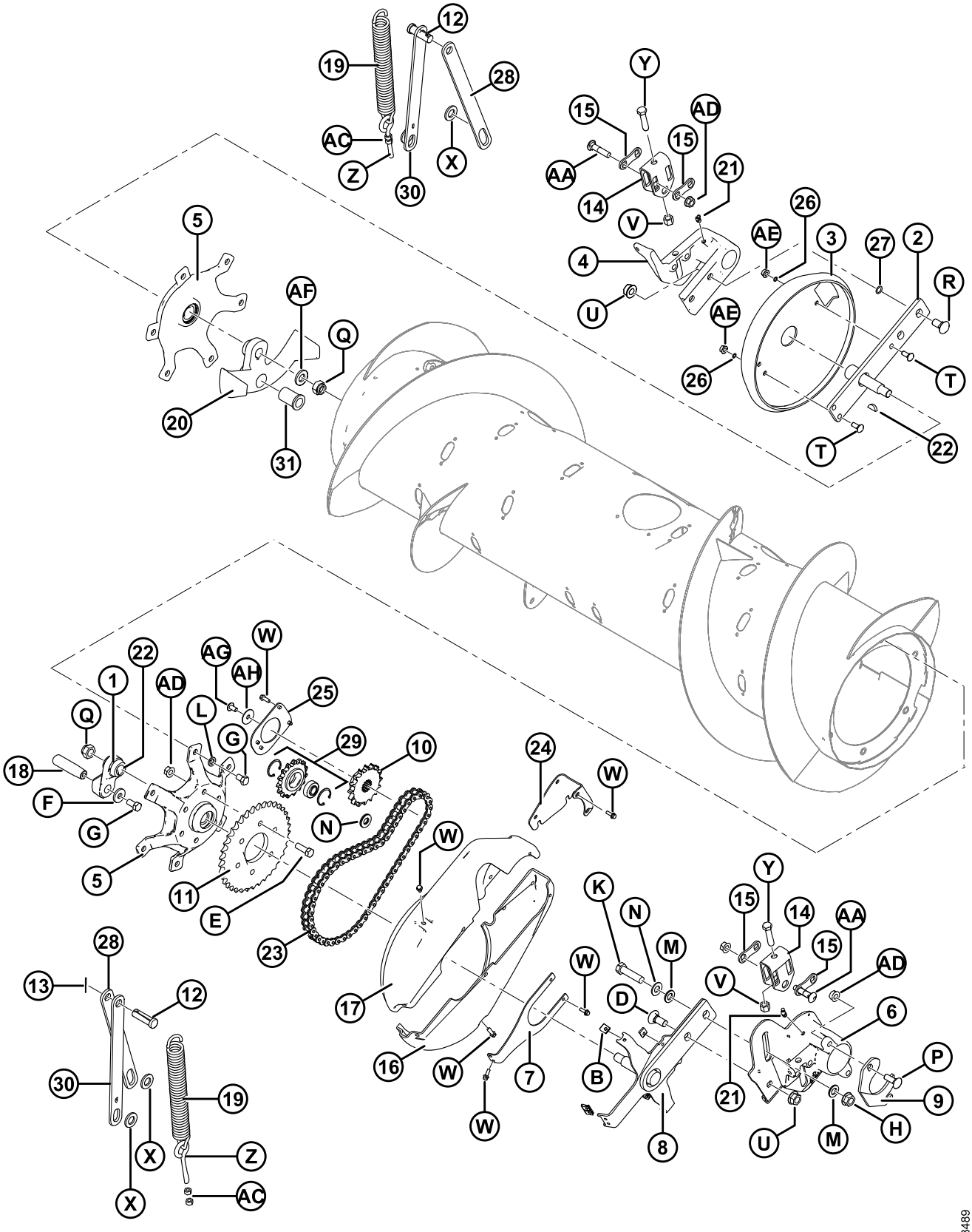

AUGER ASSEMBLY

Ref	Part Number	Description	Qty	Serial Number
1	133513	ARM – FINGER SHAFT CRANK MACHINED	1	
2	133497	SUPPORT – AUGER WELDT (RH)	1	
3	133498	COVER – AUGER END CAP (RH)	1	
4	133503	PIVOT – MACHINING AUGER (RH)	1	
5	133504	HUB	2	
	132607	BEARING – DOUBLE ROW BALL 52 O.D. X 25 BORE	2	
	21235	RING – INTERNAL RETAINING	2	
6	**279691**	**PIVOT – AUGER MACHINING (LH)**	**1**	
7	133509	RETAINER – DRIVE COVER	1	
8	133510	ARM – AUGER SUPPORT WELDT (LH)	1	
9	151470	CLAMP – PLATE	1	
10	151691	SPROCKET – RC 60 B 16 T	1	
11	151793	SPROCKET – RC 60 A 37 T	1	
12	18626	PIN – CLEVIS	2	
13	18648	PIN – COTTER 3/16 DIA X 1.25 ZP	6	
14	187427	BRACKET – ADJUSTER	2	
15	187428	SPACER	4	
16	**279690**	**COVER – AUGER DRIVE HALF (LH)**	**1**	
17	**279658**	**COVER – AUGER DRIVE HALF (RH)**	**1**	
18	187619	PIN – PIVOT	1	
19	**245966**	**SPRING – EXTENSION**	**2**	
20	133494	STOP – MACHINING	1	
21	21301	FITTING – LUBRICATION	2	
22	2149	KEY – WOODRUFF (1/4 X 1 NOM.)	2	
23	220317	CHAIN – RC-60H, 56 PITCHES RIVETED, ENDLESS	1	
24	**279652**	**PLATE – COVER RETAINER**	**1**	
25	220320	PLATE – COVER RETENTION INNER MACHINED	1	
26	**135597**	**O-RING**	**3**	
27	50083	O-RING	2	
28	133160	BAR – AUGER SUPPORT (REAR LINK)	2	
29	9333	SPROCKET – ASSEMBLY [14]	1	
	795	RING – RETAINING		
	9213	BEARING – BALL		

14. Includes two retaining rings (MD #795) and one ball bearing (MD #9213).

AUGER ASSEMBLY

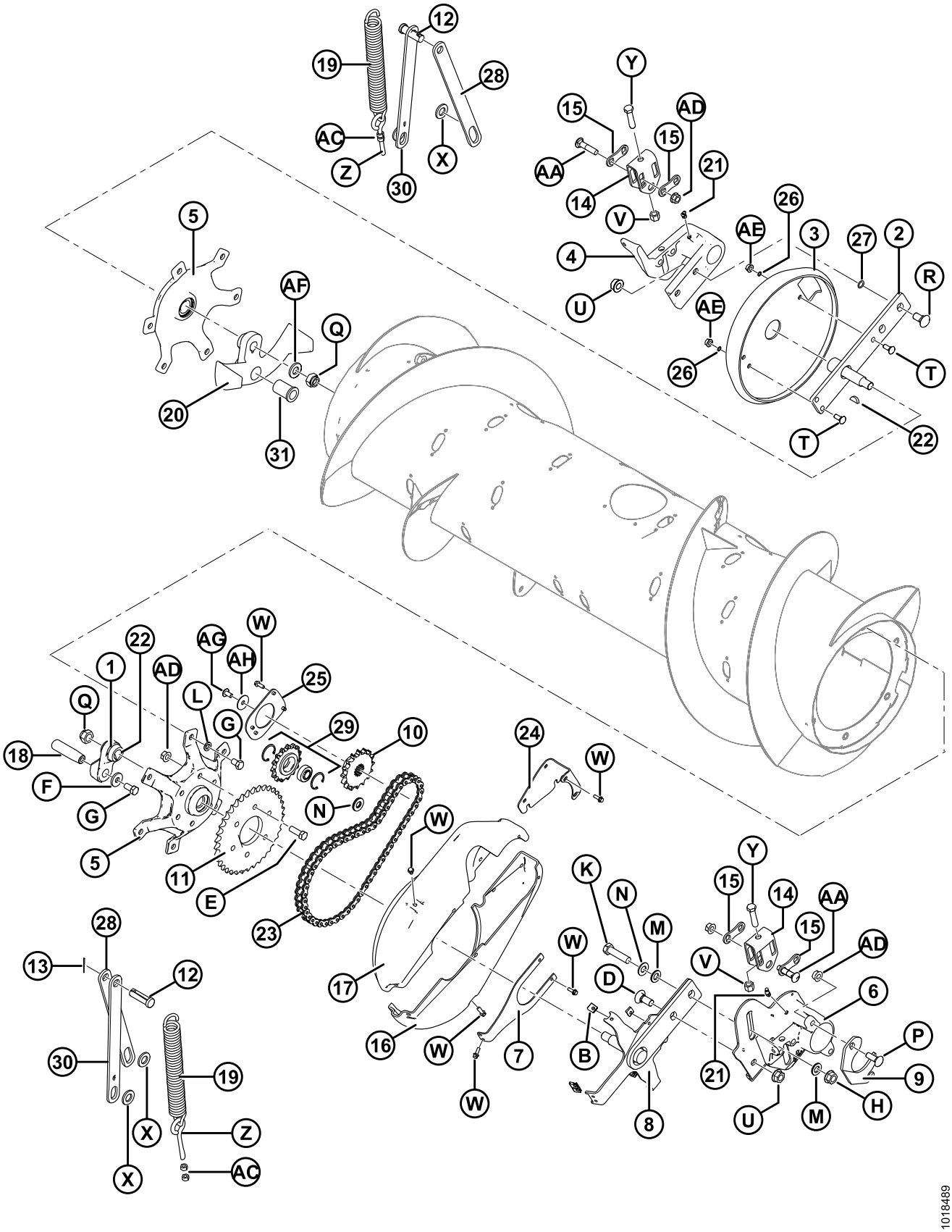

Ref	Part Number	Description	Qty	Serial Number
30	133161	BAR – AUGER SUPPORT (FRONT LINK)	2	
31	**156879**	**BUSHING – FLANGE**	**1**	
A	30035	BOLT – HH 3/8 NC X 2.75 LG GR 5 ZP		
B	123708	NUT – 1/4-20 SHEET METAL		
C	21880	BOLT – HH 1/2 NC X 2.75 LG GR 5 ZP		
D	18523	BOLT – RHSN 5/8 NC X 1.5 GR 5 ZP		
E	18723	BOLT – HH 1/2 NC X 1.5 LG TFL GR 5 ZP		
F	4761	WASHER – FLAT		
G	21575	BOLT – HH 1/2 NC X 1.0 LG GR 5 ZP		
H	188467	NUT – FLANGE DT SMOOTH FACE .625-18 UNF GR. G		
K	**252259**	**BOLT – HH 5/8 NF X 2.75 GR 8 ZP**		
L	18638	WASHER – REG. LOCK 1/2 IN. NOM. I.D. ZP		
M	172558	WASHER – NORDLOCK 5/8 IN.		
N	18600	WASHER – SAE FLAT 21/32 I.D. X 1-5/16 IN. O.D. ZP		
P	21469	BOLT – RHSN 1/2 NC X 3.5 LG GR 5 ZP		
Q	112129	NUT – HEX LOCK DT 3/4-16 UNF		
R	103562	BOLT – RHSN 5/8 NC X 1.25 GR 5 ZP		
S	123202	NUT – TEE **(NOT ILLUSTRATED)** [15]		
T	19965	BOLT – RHSN 3/8 NC X 1.0 GR 5 ZP		
U	50225	NUT – FLANGE DT SMOOTH FACE .625-11 UNC		
V	21389	NUT – HEX LOCK .500-13 UNC		
W	21456	BOLT – HH FLG (SER FACE) 1/4 NC X 0.75 GR 5 ZP		
X	112130	WASHER – HARDENED		
Y	30833	BOLT – HH 1/2 NC X 2.25 TFL GR 5 ZP		
Z	248466	BOLT – EYE		
AA	30027	BOLT – RHSN 1/2 NC X 2.25 LG GR 5 ZP		
AB	156799	WASHER – PLASTIC		
AC	18590	NUT – HEX 3/8-16 UNC GR 5 ZP		
AD	50186	NUT – FLANGE LOCK SM FACE DT 0.500-13 UNC GR 5		
AE	30228	NUT – FLANGE DT SMOOTH FACE 0.375-16 UNC		
AF	15325	WASHER – FLAT, 25/32 IN. I.D., 1-1/2 IN. O.D., 7 GA, ZN PL		
AG	**135157**	**SCREW – MACHINE, TORX TRUSS HD 3/8-16 UNC X .75**		
AH	**18963**	**WASHER – FLAT, 10.3 MM I.D., 38 MM O.D., ZN PL**		

15. Refer to Section *5 Auger Internal Components, page 13*.

7 Drives

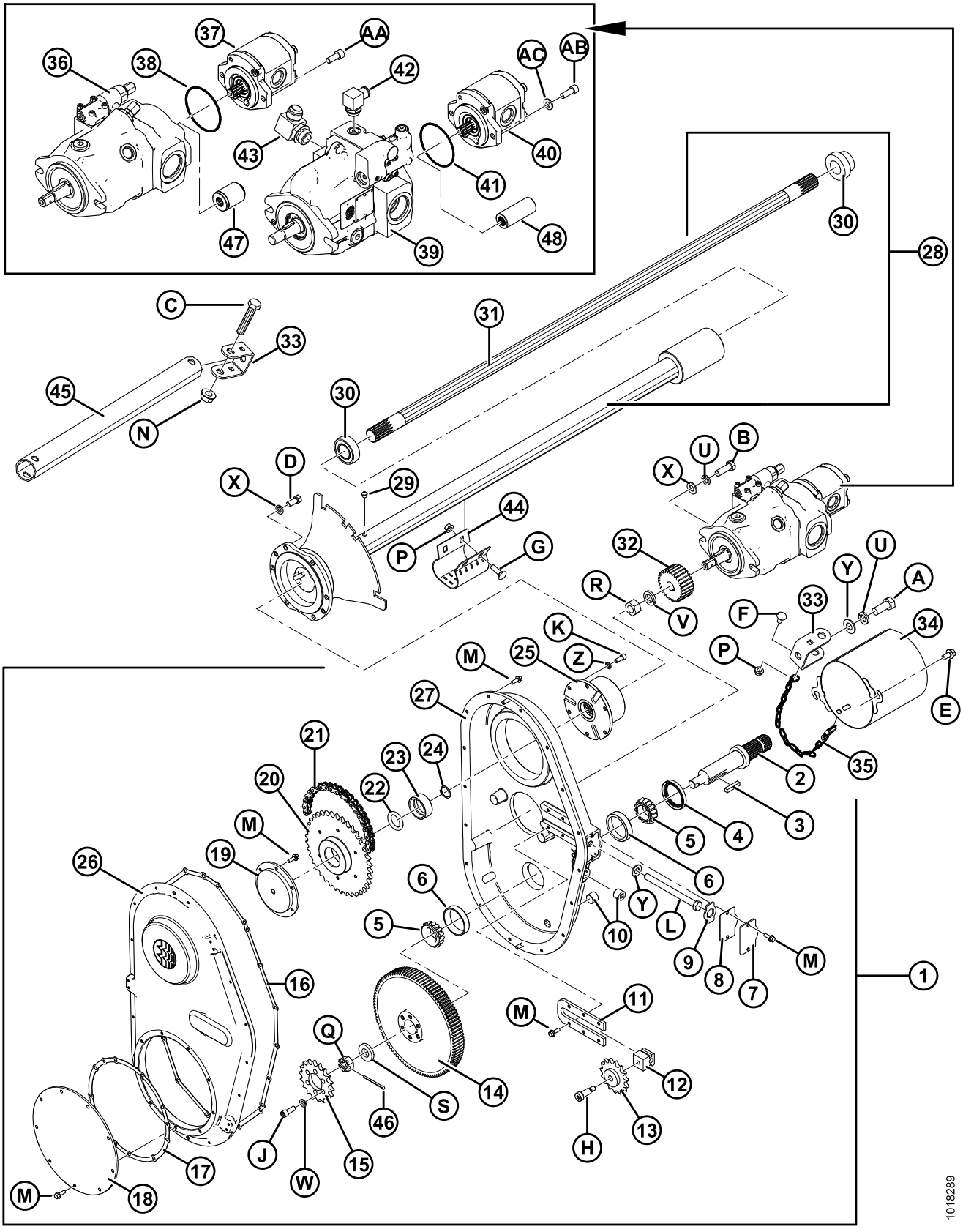
1
2
3
4
5
6
7
8
9
10
11
12
13
14
15
16
17
18
19
20
21
22
23
24
25
26
27
28
29
30
31
32
33
34
35
36
37
38
39
40
41
42
43
44
45
46
47
48
A
AA
AB
AC
B
C
D
E
F
G
H
J
K
L
M
N
P
Q
R
S
U
V
W
X
Y
Z
1018289

Ref	Part Number	Description	Qty	Serial Number
1	187502	DRIVE – GEARBOX COMPLETE (LEXION / AGCO) [16]	1	
	187475	DRIVE – GEARBOX COMPLETE (CNH / JD) [16]	1	
2	187478	SHAFT	1	
3	26846	KEY	1	
4	187477	SEAL	1	
5	30702	BEARING – CONE	2	
6	30701	BEARING – CUP	2	
7	187494	COVER – ADJUSTING	1	
8	187696	GASKET – ADJUSTMENT COVER	1	
9	187495	RETAINER	1	
10	30203	PLUG – MAGNETIC PIPE	3	
11	187493	PLATE	1	
12	187476	BLOCK – IDLER	1	
13	187484	SPROCKET – IDLER 50C15	1	
14	187480	GEAR – 97 TEETH	1	
15	187497	SPROCKET – 50A18 (**LEXION /** AGCO)	1	
	187496	SPROCKET – 50A24 (CNH / JD)	1	
	187523	**KIT – SPROCKET, 20 TOOTH** [17]	**OPT**	
	187524	**KIT – SPROCKET, 22 TOOTH** [17]	**OPT**	
	187525	**KIT – SPROCKET, 26 TOOTH** [17]	**OPT**	
16	187697	GASKET – HOUSING	1	
17	187698	GASKET – SPROCKET COVER	1	
18	187482	COVER – SPROCKET	1	
19	187486	SUPPORT – PINION	1	
20	187492	SPROCKET – 50B38	1	
21	156037	ROLLER CHAIN – RC 50 (74 PITCHES ENDLESS) LEXION	1	
22	187487	SHIM – KIT	1	
23	187485	BEARING – BALL DBL ROW 3205	1	

16. Includes items #2–27.
17. Includes sprocket and installation instructions.

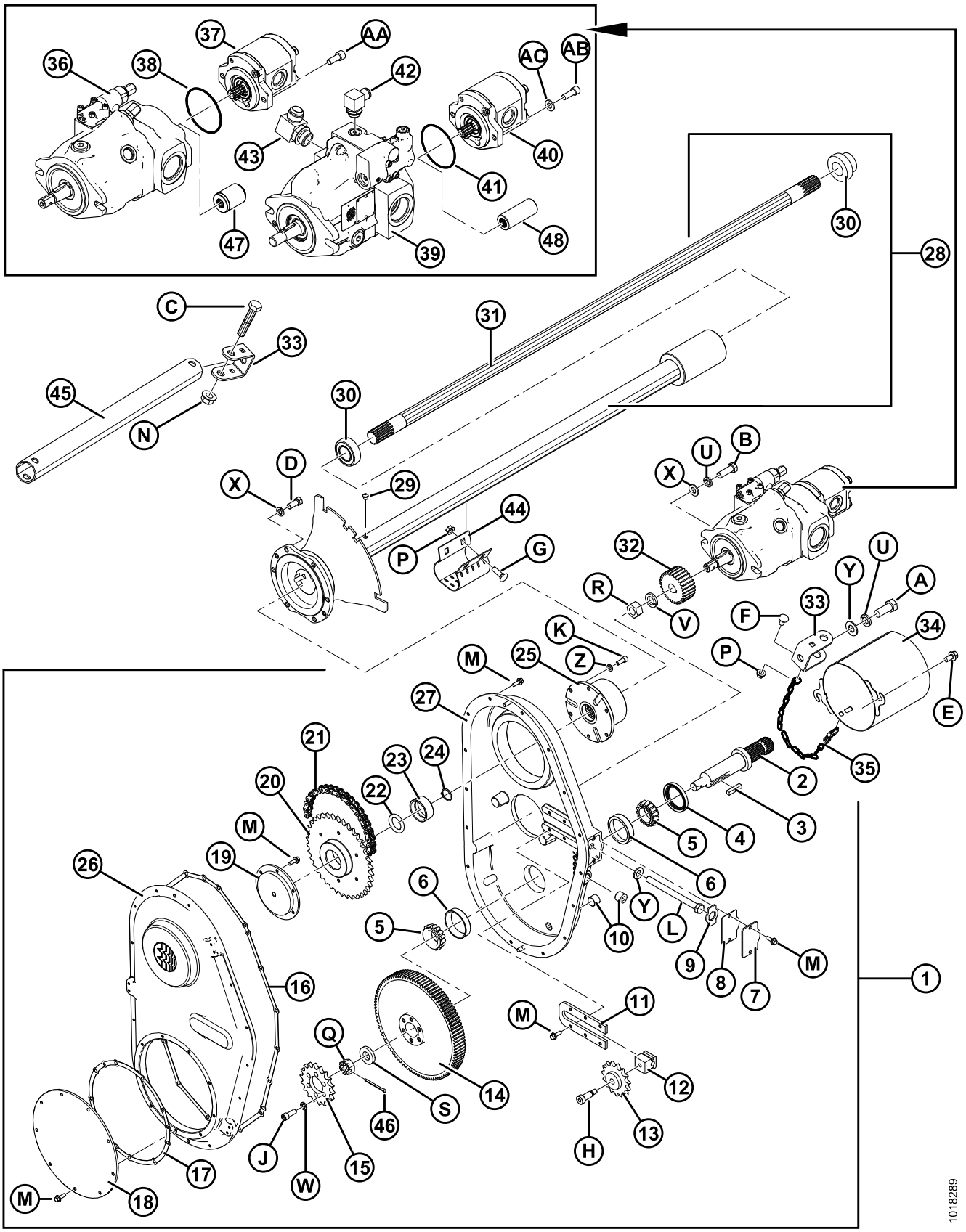
1
2
3
4
5
6
7
8
9
10
11
12
13
14
15
16
17
18
19
20
21
22
23
24
25
26
27
28
29
30
31
32
33
34
35
36
37
38
39
40
41
42
43
44
45
46
47
48
A
AA
AB
AC
B
C
D
E
F
G
H
J
K
L
M
N
P
Q
R
S
U
V
W
X
Y
Z
1018289

Ref	Part Number	Description	Qty	Serial Number
24	18898	RING – EXT. RETAINING	1	
25	187466	COMPACT AUTOMATIC CLUTCH	1	
26	**187481**	**COVER – GEARBOX**	**1**	
27	**187479**	**HOUSING – GEARBOX**	**1**	
28	**213830**	**OUTPUT SHAFT ASSEMBLY** [18]	1	
29	21425	VALVE – RELIEF	1	
30	21363	BEARING – SPH OD AND COLLAR	2	
31	**279689**	**SHAFT – OUTPUT**	**1**	
32	156452	GEAR – PINION	1	
33	187520	ANCHOR – STRUT	2	
34	133421	GUARD – WELDMENT	1	
35	**279081**	**CHAIN**	**1**	
36	187517	PUMP – BOSCH/**REXROTH** PISTON [19]	1	
	133569	SEAL KIT – FOR BOSCH/**REXROTH** PISTON PUMP		
37	156852	PUMP – GEAR, 16 CC (CNH COMBINES ONLY)	1	
	156853	PUMP – GEAR, 11 CC, **BOSCH/REXROTH** (LEXION AND AGCO COMBINES ONLY)	1	
	245301	**PUMP – GEAR 19 CC, BOSCH/REXROTH (JOHN DEERE COMBINES ONLY)** [20]	**1**	
	187967	SEAL KIT – FOR BOSCH/**REXROTH** GEAR PUMPS [21]		
38	49802	O-RING – BOSCH/**REXROTH** GEAR PUMP TO PISTON PUMP SEAL	1	
39	187229	PUMP – SAUER/**DANFOSS** [22]	1	
	187900	SEAL KIT – FOR SAUER/**DANFOSS** PISTON PUMP		
	187925	SEAL – SHAFT, FOR SAUER/**DANFOSS** PISTON PUMP		
40	187252	PUMP – GEAR, 16 CC (CNH COMBINES ONLY)	1	
	187253	PUMP – GEAR, 11 CC (LEXION AND AGCO-CASAPPA COMBINES ONLY)	1	
	187918	SEAL KIT [23]		

18. Includes valve (MD #21425), bearing (MD #21363), and shaft (MD #279689).
19. Compatible with all combine models.
20. Permissible to service with Casappa 19 CC gear pump MD #245695.
21. Used in gear pumps MD #156852, 156853, and 245301.
22. Compatible with all combine models except John Deere. Bosch/Rexroth pump (MD #187517) max displacement is 45 CC while Sauer/Danfoss pump (MD #187229) is only 38 CC, which makes it unable to achieve the desired knife speed with the slow input drive available from certain John Deere (S-series) combines.
23. Used in both Casappa gear pumps MD #187252 and 187253.

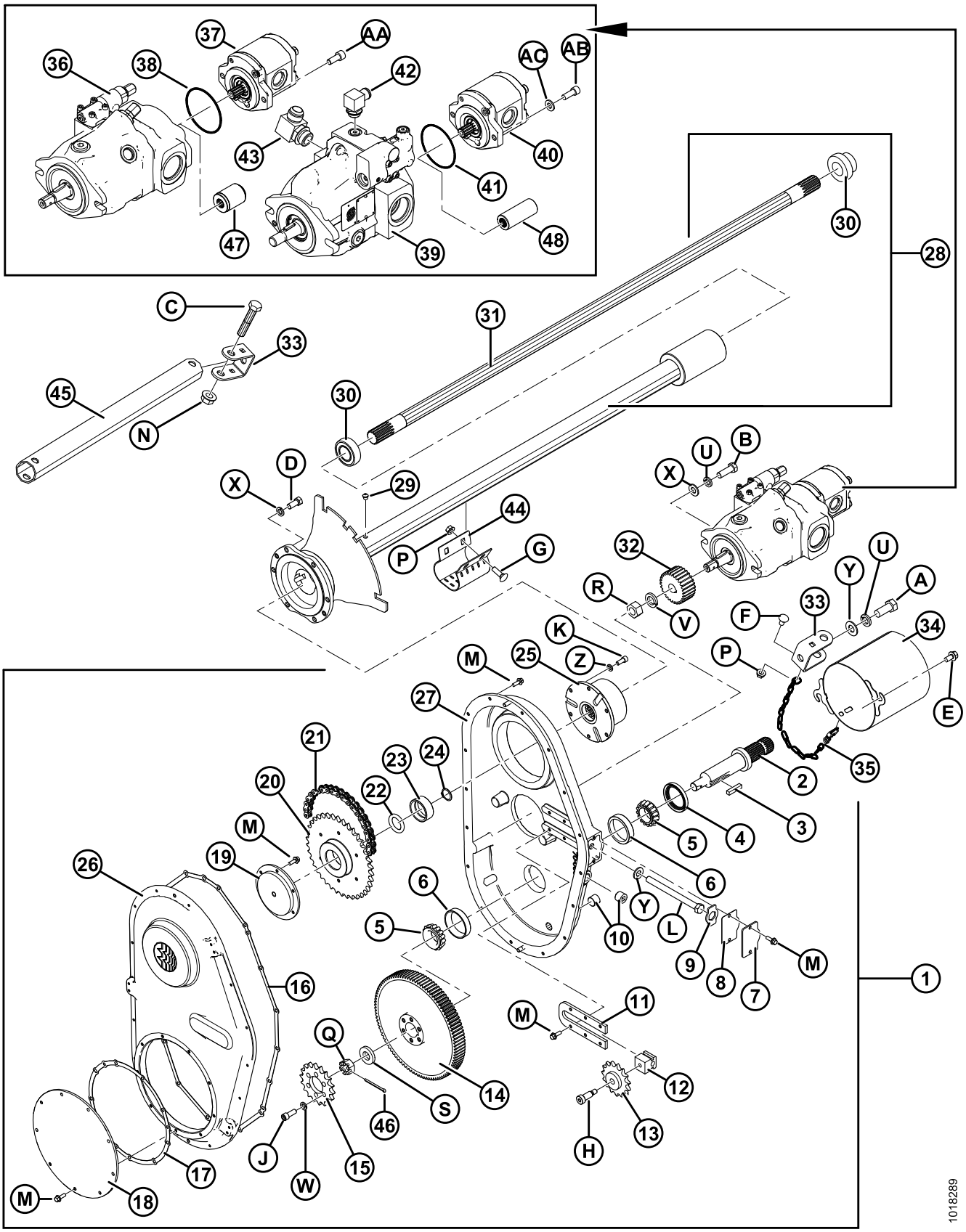
1
2
3
4
5
6
7
8
9
10
11
12
13
14
15
16
17
18
19
20
21
22
23
24
25
26
27
28
29
30
31
32
33
34
35
36
37
38
39
40
41
42
43
44
45
46
47
48
A
AA
AB
AC
B
C
D
E
F
G
H
J
K
L
M
N
P
Q
R
S
U
V
W
X
Y
Z
1018289

Ref	Part Number	Description	Qty	Serial Number
41	49802	O-RING – PUMP SAUER/**DANFOSS**	1	
42	111545	FITTING – ELBOW 1.5 IN HOSE-1.875 IN ADJ ORB	1	
43	21827	FITTING – ELBOW HYD	1	
44	248850	CLAMP	1	
45	187898	TUBE – STRUT	1	
46	135358	PIN – COTTER, 5/32 DIA X 2.0 ZP	1	
47	**245804**	**HUB – SPLINED (FOR BOSCH/REXROTH PUMP)**	**1**	
48	**245805**	**HUB – SPLINED (FOR SAUER/DANFOSS PUMP)**	**1**	
A	21594	BOLT – HEX HD 0.625-11 UNC X 1.50		
B	18723	BOLT – HH 1/2 NC X 1.5 LG TFL GR 5 ZP		
C	21583	BOLT – HH 5/8 NC X 3.0 LG GR 5 ZP		
D	21522	BOLT – HH 7/16 NC X 1.0 LG GR 5 ZP		
E	21821	BOLT – HH FLG (SER FACE) 3/8 NC X 0.75 GR 5 ZP		
F	21472	BOLT – RHSN 3/8 NC X 0.75 GR 5 ZP		
G	19966	BOLT – RHSN 3/8 NC X 1.25 LG GR 5 ZP		
H	135694	BOLT – SHOULDER SOCKET HD-1/2 X 1.0 LG		
J	135381	BOLT – SOCKET HD-3/8 X 1.0 LG		
K	135748	BOLT – SOCKET HD-5/16 X 0.75 LG		
L	158895	BOLT – HEX HEAD, 1/2 NC X 6.0 TLF		
M	21456	BOLT – HH FLG (SER FACE) 1/4 NC X 0.75 GR 5 ZP		
N	50225	NUT – FLANGE DT SMOOTH FACE .625-11 UNC		
P	30228	NUT – FLANGE DT SMOOTH FACE 0.375-16 UNC		
Q	5512	NUT – HEX SLOTTED 3/4		
R	18720	NUT – HEX, 3/4-16 UNF GR 5 ZN PL		
S	187483	WASHER – FLAT, 20.4 MM I.D., 40.0 MM O.D., 6.5 MM THK		
T	18638	WASHER – REG. LOCK 1/2 IN. NOM. I.D. ZP		
U	18639	WASHER – REG. LOCK 5/8 IN. NOM. I.D. ZP		
V	18640	WASHER – REG. LOCK 3/4 IN. NOM. I.D. ZP		
W	**18637**	**WASHER – REG. LOCK 3/8 IN. NOM. I.D. ZP**		
X	18599	WASHER – SAE FLAT 17/32 I.D. X 1-1/16 IN. O.D. ZP		
Y	18600	WASHER – SAE FLAT 21/32 I.D. X 1 5/16 IN. O.D. ZP		
Z	18636	WASHER – LOCK SPRING, 5/16 I.D.		
AA	135693	BOLT – **SKT HH**, M10 X 25 MM LG (BOSCH/**REXROTH** PUMP)		
AB	164223	BOLT – PUMP SAUER/**DANFOSS**		
AC	30655	WASHER – PUMP SAUER/**DANFOSS**		

8 Input Driveline

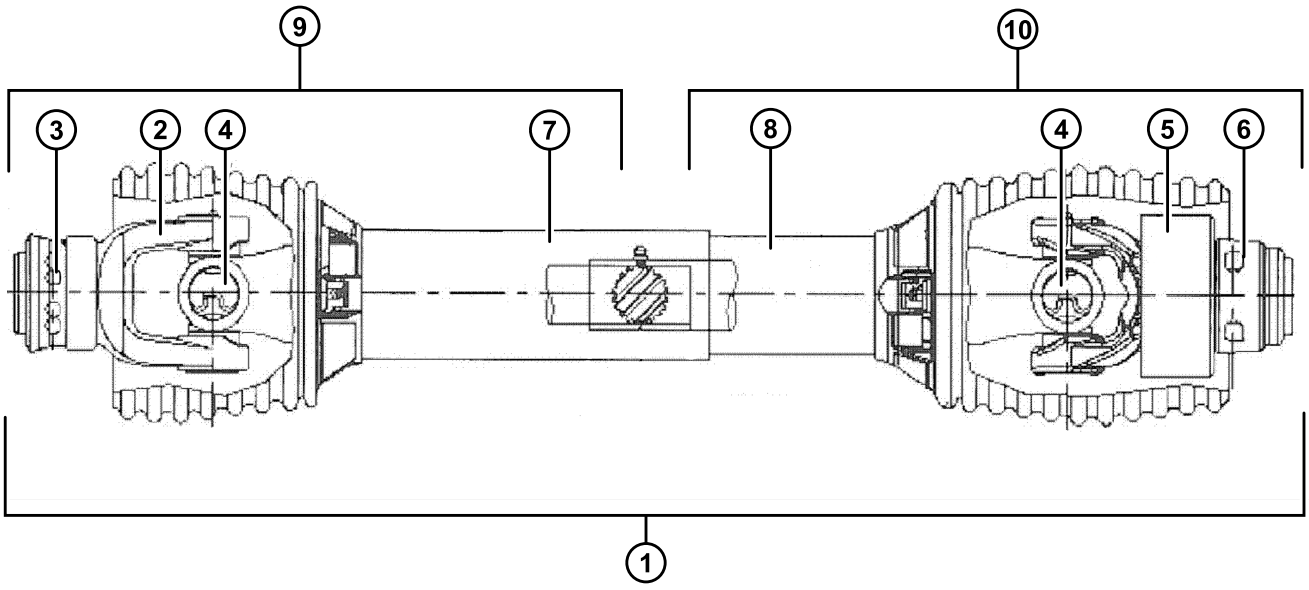

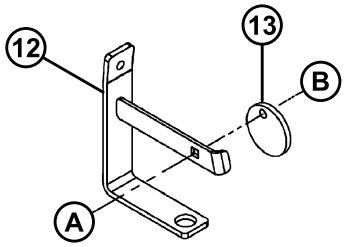

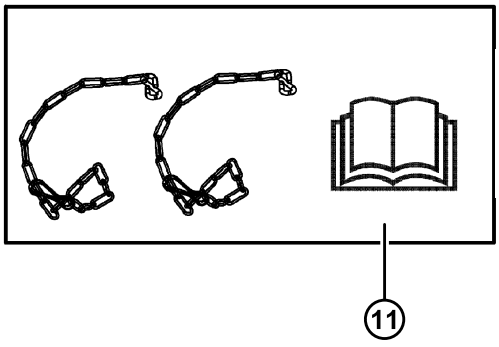

1004394

INPUT DRIVELINE

Ref	Part Number		Description	Qty	Serial Number
	GUIDE:	*	6T DRIVELINE – CASE IH MIDRANGE/FLAGSHIP 10/20/30/40 SERIES, ALL NEW HOLLAND CR/CX.		
		**	21T DRIVELINE – JD STS/S SERIES (EXCEPT MODELS LISTED AT ***), LEXION AND AGCO.		
		***	21T DRIVELINE – JD WIDEBODY WALKER MACHINES-9650/9660, 9660 WTS, AND T9670.		
		****	HEX BORE DRIVELINE – CASE IH 88 SERIES.		
1	187225	*	6T DRIVELINE – COMPLETE (NORTH AMERICA)	1	
	187313	**	21T DRIVELINE – COMPLETE (NORTH AMERICA)	1	
	156945	***	21T DRIVELINE – COMPLETE (NORTH AMERICA)	1	
	156946	****	HEX BORE DRIVELINE – COMPLETE (NORTH AMERICA)	1	
	187552	*	6T DRIVELINE – COMPLETE (EXPORT)	1	
	187553	**	21T DRIVELINE – COMPLETE (EXPORT)	1	
	187550	***	21T DRIVELINE – COMPLETE (EXPORT)	1	
	187551	****	HEX BORE DRIVELINE – COMPLETE (EXPORT)	1	
2	133634		YOKE – SPRING LOCK 6T	1	
	133637		YOKE – SPRING LOCK 21T	1	
	133641		YOKE – SPRING LOCK, HEX BORE	1	
3	40095		REPAIR KIT – SPRING LOCK YOKE (6T AND 21T)		
	133640		REPAIR KIT – SPRING LOCK YOKE (HEX BORE)		
4	142777		CROSS JOURNAL ASSEMBLY [24]	2	
5	133631		YOKE – FREE MOTION	1	
6	133632		REPAIR KIT – AUTO LOCK YOKE		
7	187255	*	GUARD – 6T DRIVELINE (OUTER)	1	
	187315	**	GUARD – 21T DRIVELINE (OUTER)	1	
	133644	***	GUARD – 21T DRIVELINE (OUTER)	1	
	133642	****	GUARD – HEX BORE DRIVELINE (OUTER)	1	
8	187256	*	GUARD – 6T DRIVELINE (INNER)	1	
	187316	**	GUARD – 21T DRIVELINE (INNER)	1	
	133645	***	GUARD – 21T DRIVELINE (INNER)	1	
	133643	****	GUARD – HEX BORE DRIVELINE (INNER)	1	

24. Includes clips and lube fitting.

INPUT DRIVELINE

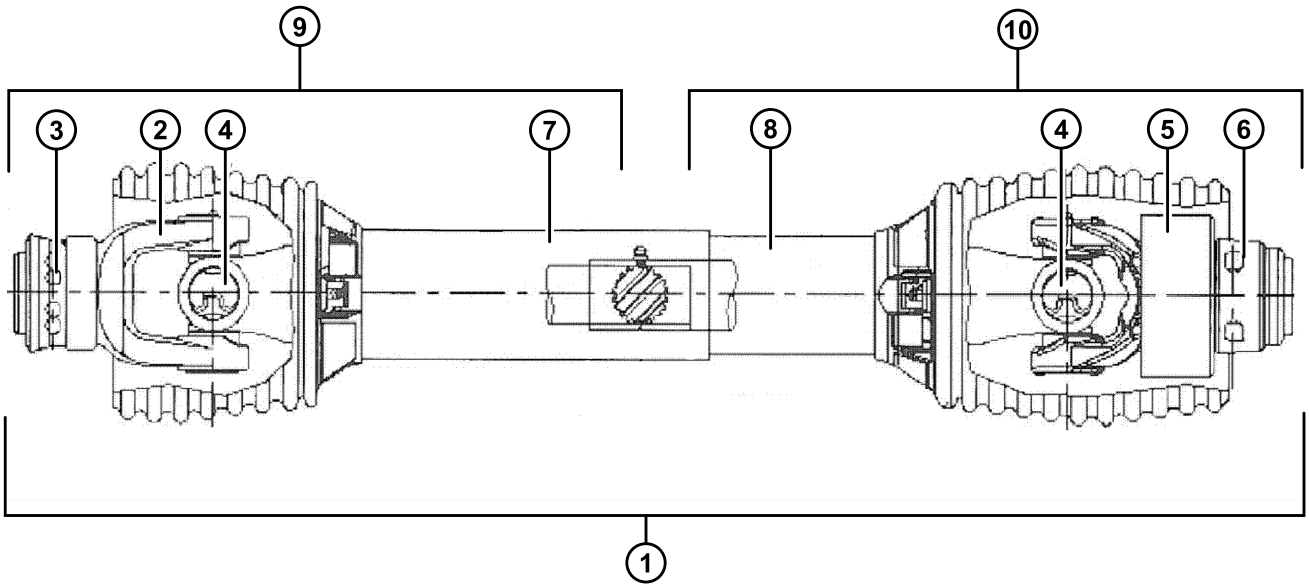

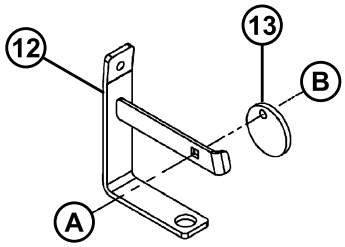

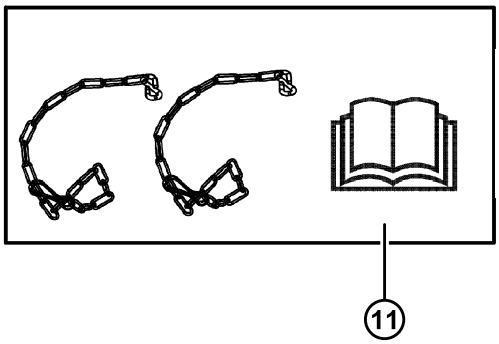

1004394

INPUT DRIVELINE

Ref	Part Number		Description	Qty	Serial Number
9	187257	*	HALF SHAFT – 6T COMBINE END WITH OUTER GUARD (NORTH AMERICA)	1	
	187317	**	HALF SHAFT – 21T COMBINE END WITH OUTER GUARD (NORTH AMERICA)	1	
	133649	***	HALF SHAFT – 21T COMBINE END WITH OUTER GUARD (NORTH AMERICA)	1	
	133648	****	HALF SHAFT – HEX BORE COMBINE END WITH OUTER GUARD (NORTH AMERICA)	1	
	187558	*	HALF SHAFT – 6T COMBINE END WITH OUTER GUARD (EXPORT)	1	
	187560	**	HALF SHAFT – 21T COMBINE END WITH OUTER GUARD (EXPORT)	1	
	187554	***	HALF SHAFT – 21T COMBINE END WITH OUTER GUARD (EXPORT)	1	
	187556	****	HALF SHAFT – HEX BORE COMBINE END WITH OUTER GUARD (EXPORT)	1	
10	187258	*	HALF SHAFT – 6T ADAPTER END WITH INNER GUARD (NORTH AMERICA)	1	
	187318	**	HALF SHAFT – 21T ADAPTER END WITH INNER GUARD (NORTH AMERICA)	1	
	133653	***	HALF SHAFT – 21T ADAPTER END WITH INNER GUARD (NORTH AMERICA)	1	
	133652	****	HALF SHAFT – HEX BORE ADAPTER END WITH INNER GUARD (NORTH AMERICA)	1	
	187559	*	HALF SHAFT – 6T ADAPTER END WITH INNER GUARD (EXPORT)	1	
	187561	**	HALF SHAFT – 21T ADAPTER END WITH INNER GUARD (EXPORT)	1	
	187555	***	HALF SHAFT – 21T ADAPTER END WITH INNER GUARD (EXPORT)	1	
	187557	****	HALF SHAFT – HEX BORE ADAPTER END WITH INNER GUARD (EXPORT)	1	
11	194530		KIT – SAFETY CHAINS (2) CE DECAL AND USER MANUAL (EXPORT)	1	
12	133166		BRACKET – DRIVELINE HANGER	1	
13	133165		DISC – LOCK, DRIVELINE HANGER	1	
A	19965		BOLT – ROUND HEAD SQUARE NECK 3/8 NC X 1 IN. GR 5		
B	30228		NUT – FLG, SMOOTH FACE 3/8 NC DIST THD		

9 Hydraulics – Bosch Manifold

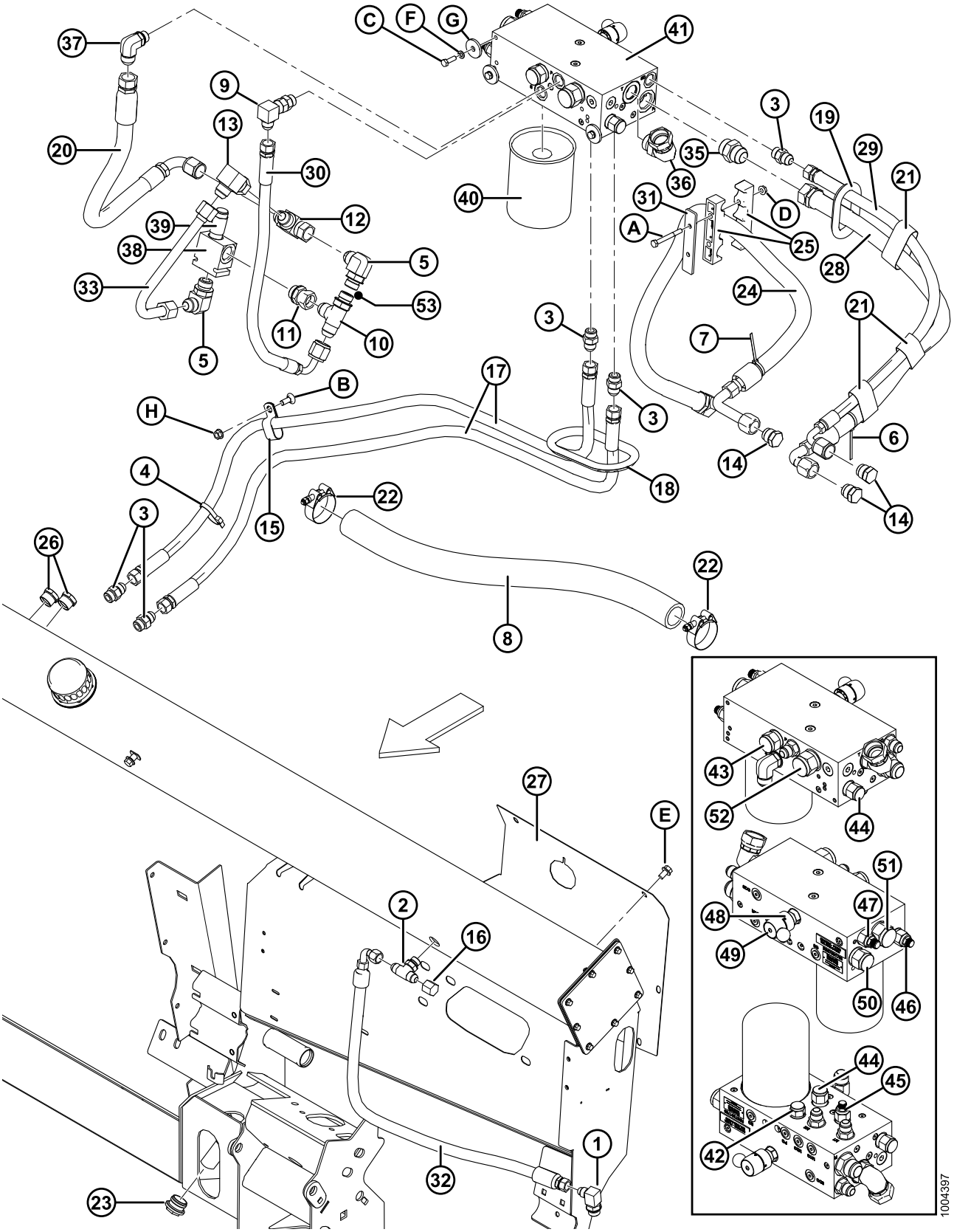

NOTE:
Parker manifold used on CA25s built for 45 ft. FD75s in September of 2013 and all 2015 and forward model year units. All other units use a Bosch manifold. Verify which manifold your unit has to ensure proper replacement parts are ordered. For Parker manifold parts, refer to Section *10 Hydraulics – Parker Manifold, page 35*.

Ref	Part Number	Description	Qty	Serial Number
1	21801	FITTING – ELBOW 90° HYD	1	
2	30287	FITTING – TEE HYD STR THD BRANCH TEE C/W O-RING	1	
3	30695	FITTING – CONNECTOR HYDRAULIC (SD, M1, M2)	3	
4	30753	FASTENER – CABLE TIE	3	
5	30970	FITTING – ELBOW 90° HYDRAULIC	2	
6	40703	FASTENER – CABLE TIE (BLUE)	1	
7	40704	FASTENER – CABLE TIE (ORANGE)	1	
8	42029	HOSE – HYDRAULIC, 36.6 IN. I.D. 820 MM LG	1	
9	30556	FITTING – ELBOW 90° HYDRAULIC (P)	1	
10	30858	FITTING – TEE HYDRAULIC STR THD RUN TEE C/W O-RING	1	
11	40241	FITTING – ADAPTER HYDRAULIC C/W O-RING	1	
12	50086	FITTING – HYDRAULIC TEE	1	
13	50175	FITTING – ELBOW 90° HYDRAULIC	1	
14	103576	PLUG – 3/4 IN. TUBE	3	
15	103738	CLAMP – PVC INSULATED 13/16 IN. TUBE SIZE	2	
16	108233	CAP – 1/2 IN. TUBE	1	
17	125516	HOSE – HYD, 1/2 IN. I.D. 1550 MM LG 100R17, METAL REIN.	2	
18	125590	GROMMET – RUBBER	1	
19	125592	GROMMET – RUBBER	1	
20	133378	HOSE – HYD, 0.75 IN. I.D. 675 MM LG 100R17, METAL REIN.	1	
21	135444	FASTENER – CINCH STRAP 6 IN. LG	3	
22	245753	CLAMP – T BOLT	2	
23	156051	PLUG – #16 ORB	2	
24	220274	HOSE – HYDRAULIC	1	
25	187010	CLAMP	2	
26	187242	SIGHT GLASS	2	
27	187596	COVER – HYDRAULIC COMPARTMENT	1	
28	187815	HOSE – HYD, 0.75 IN. I.D. 800 MM LG 100R17, METAL REIN.	1	
29	187816	HOSE – HYD, 1/2 IN. I.D. 800 MM LG 100R17, METAL REIN.	1	
30	220847	HOSE – HYD, 1/2 IN. I.D. 620 MM LG 100R17, METAL REIN.	1	
31	187958	PLATE	1	
32	187965	HOSE – HYD, 1/2 IN. I.D. 800 MM LG 100R17, METAL REIN.	1	

HYDRAULICS – BOSCH MANIFOLD

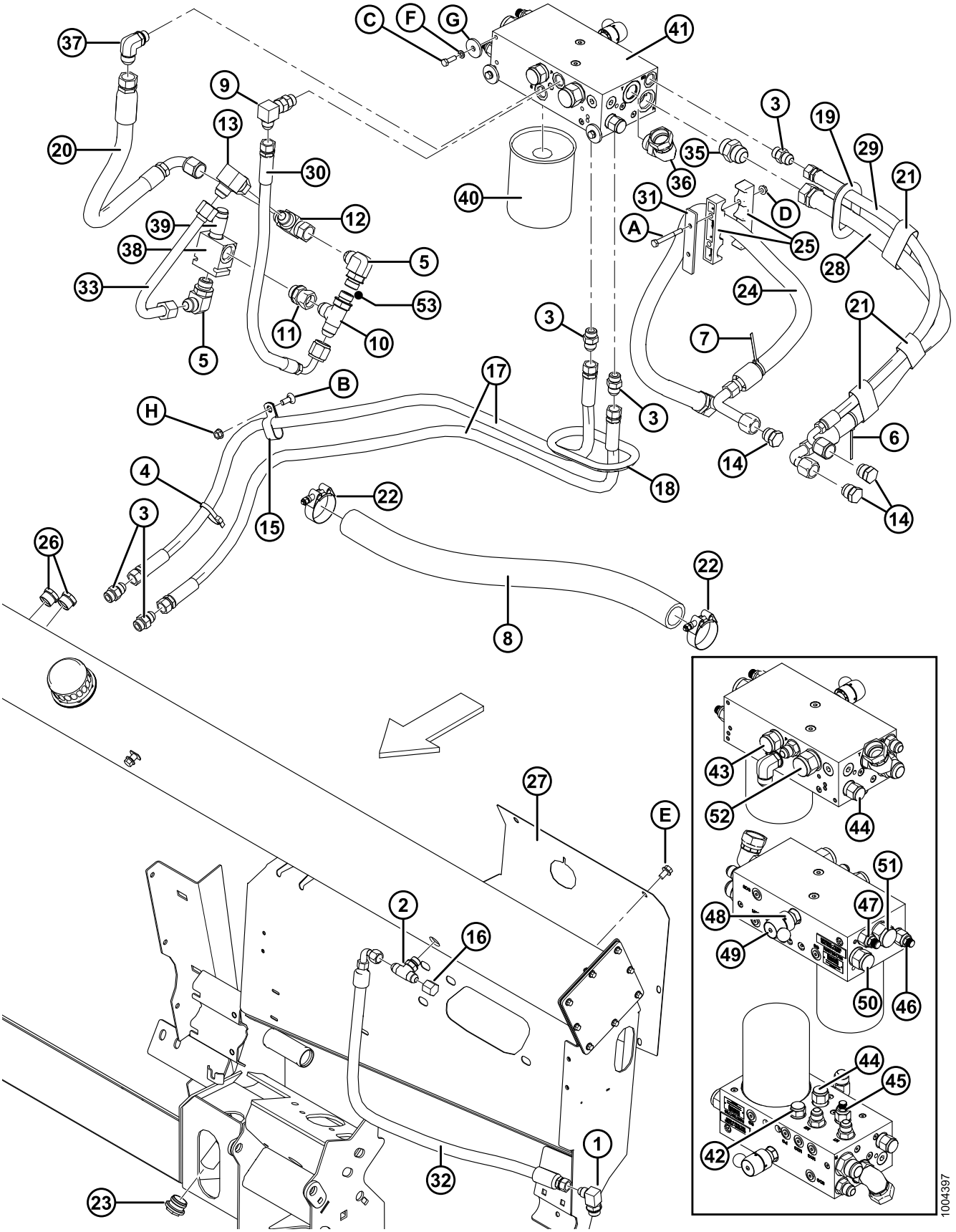

Ref	Part Number	Description	Qty	Serial Number
33	220846	LINE – HYDRAULIC, 3/4 IN. DIA BENT	1	
35	21828	FITTING – CONNECT. HYD STRGHT THRD SHORT SAE (R)	1	
36	135980	FITTING – 90° ELBOW #16 MALE ORB / #16 FEMALE JIC (T)	1	
37	50221	FITTING – ELBOW 90° HYDRAULIC (S)	1	
38	220843	MANIFOLD – RELIEF	1	
39	220907	VALVE – HYDRAULIC BIDIRECTIONAL RELIEF	1	
	220908	SEAL KIT		
40	123989	FILTER ELEMENT – 10 MICRON NOMINAL (BOSCH)	1	
41	187791	MANIFOLD – BOSCH C/W FTGS [25]	1	
	248245	KIT – MANIFOLD, BOSCH TO PARKER REPAIR, C/W FTGS [26]	1	
42	174927	VALVE – CHECK (V1)	1	
43	174928	VALVE – CHECK (V2)	1	
44	174929	VALVE – DIRECTIONAL (V3)	2	
45	174930	VALVE – RELIEF (V4)	1	
46	174931	VALVE – RELIEF (V5)	1	
47	174932	VALVE – COMPENSATOR (V6)	1	
48	174933	VALVE – FLOW CONTROL (V7)	1	
49	174934	HANDLE – BALL (V7.1)	1	
50	174935	VALVE – COMPENSATOR (V8)	1	
51	174936	VALVE – CHECK (V9)	1	
52	174937	VALVE – CHECK (V10)	1	
53	REF	DRAPER / KNIFE DRIVE PUMP (BETWEEN #5 AND 10) [27]		
A	187142	BOLT – HH 5/16 NC X 2.75 LG GR 5 ZP		
B	19965	BOLT – RHSN 3/8 NC X 1.0 GR 5 ZP		
C	21087	BOLT – HEX HD 5/16 NC X 1.0 LG GR 5 ZP		
D	30280	NUT – FLG SIDE LK SMTH FACE 5/16 NC GR 5 ZP		
E	101898	SCREW – HEX WASH HD THD ROLLING 3/8 NC X 5/8		
F	18636	WASHER – REG LOCK 5/16 IN. NOM. I.D. ZP		
G	44623	WASHER – FLAT		
H	30228	NUT – FLANGE DT SMOOTH FACE 0.375-16 UNC		

25. Use until part is depleted. Includes filter element (MD #123989).
26. Replacement for Bosch manifold (MD #187791) once part is depleted. Kit (MD #248245) used for converting from Bosch to Parker manifold. Includes Parker manifold (MD #279490), hose (MD #187950), fitting (MD #50221), template, and instructions.
27. Reference only. For more information refer to Section *7 Drives, page 21*.

10 Hydraulics – Parker Manifold

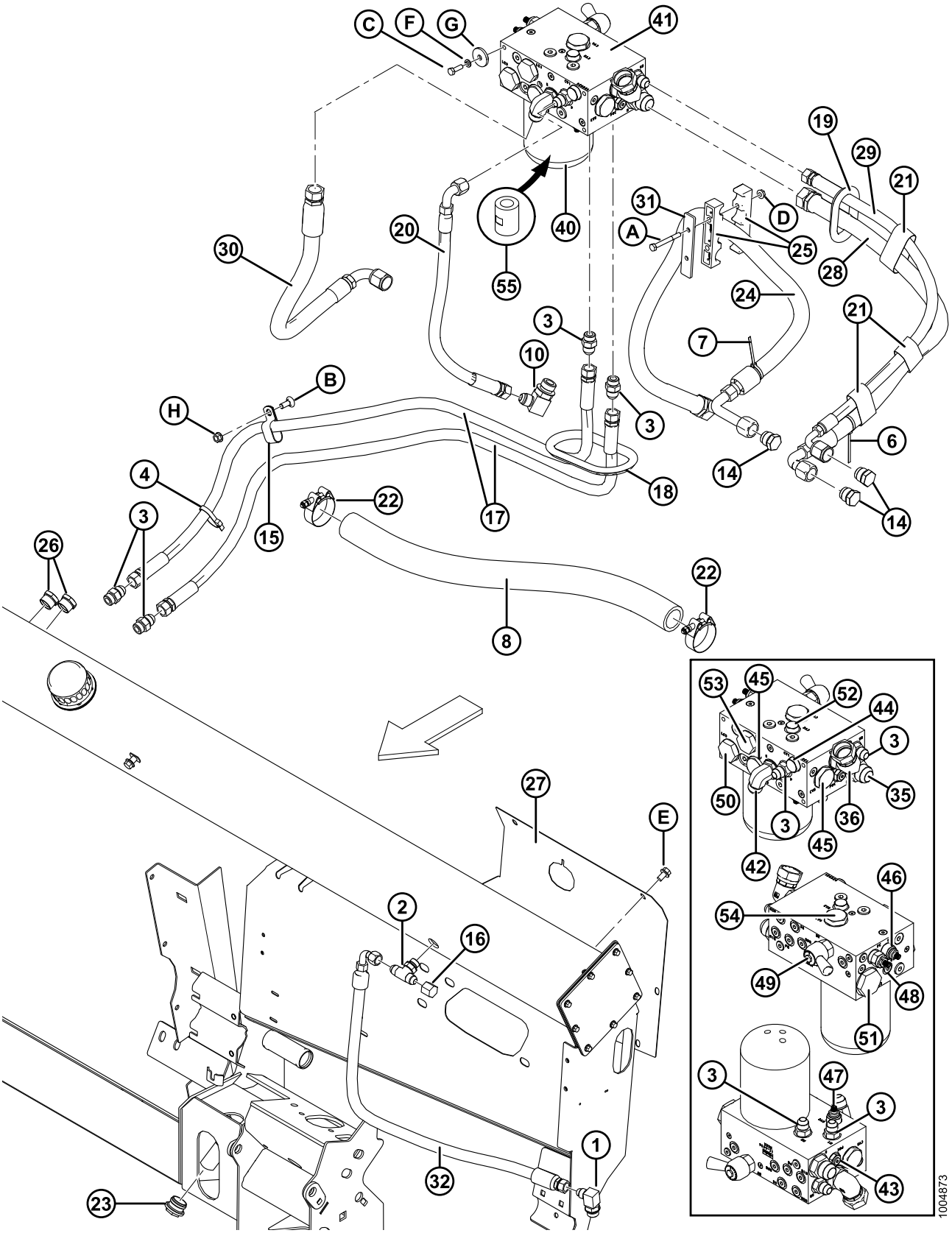

NOTE:
Parker manifold used on CA25s built for 45 ft. FD75s in September of 2013 and all 2015 and forward model year units. All other units use a Bosch manifold. Verify which manifold your unit has to ensure proper replacement parts are ordered. For Bosch manifold parts, refer to Section *9 Hydraulics – Bosch Manifold, page 31*.

Ref	Part Number	Description	Qty	Serial Number
1	21801	FITTING – ELBOW HYDRAULIC	1	
2	30287	FITTING – TEE HYD STR THD BRANCH TEE C/W O-RING	1	
3	30695	FITTING – CONNECTOR HYDRAULIC (P, SD, M1, M2)	4	
4	30753	FASTENER – CABLE TIE	3	
6	40703	FASTENER – CABLE TIE (BLUE)	1	
7	40704	FASTENER – CABLE TIE (ORANGE)	1	
8	42029	HOSE – HYDRAULIC, 36.6 IN. I.D. 820 MM LG	1	
10	50221	FITTING – ELBOW 90° HYDRAULIC	1	
14	103576	PLUG – 3/4 IN. TUBE	3	
15	103738	CLAMP – PVC INSULATED 13/16 IN. TUBE SIZE	2	
16	108233	CAP – 1/2 IN. TUBE	1	
17	125516	HOSE – HYD, 1/2 IN. I.D. 1550 MM LG 100R17, METAL REIN.	2	
18	125590	GROMMET – RUBBER	1	
19	125592	GROMMET – RUBBER	1	
20	187950	HOSE – HYD, 1/2 IN. I.D. 575 MM LG 100R17, METAL REIN.	1	
21	135444	FASTENER – CINCH STRAP 6 IN. LG	3	
22	245753	CLAMP – T BOLT	2	
23	156051	PLUG – #16 ORB	2	
24	220274	HOSE – HYDRAULIC	1	
25	187010	CLAMP	2	
26	187242	SIGHT GLASS	2	
27	187596	COVER – HYDRAULIC COMPARTMENT	1	
28	187815	HOSE – HYD, 0.75 IN. I.D. 800 MM LG 100R17, METAL REIN.	1	
29	187816	HOSE – HYD, 1/2 IN. I.D. 800 MM LG 100R17, METAL REIN.	1	
30	133378	HOSE – HYD, 0.75 IN. I.D. 675 MM LG 100R17, METAL REIN.	1	
31	187958	PLATE	1	
32	187965	HOSE – HYD, 1/2 IN. I.D. 800 MM LG 100R17, METAL REIN.	1	

HYDRAULICS – PARKER MANIFOLD

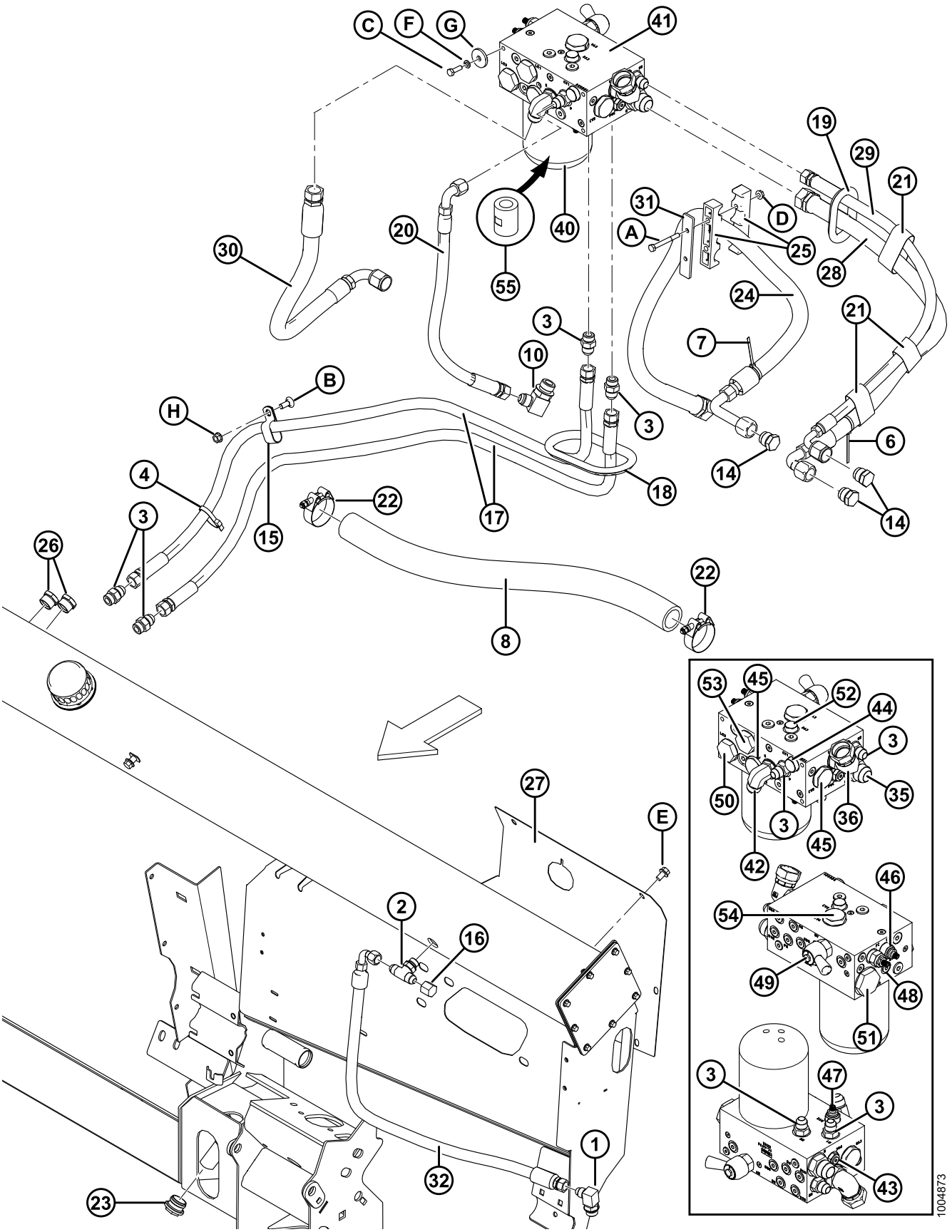

Ref	Part Number	Description	Qty	Serial Number
35	21828	FITTING – CONNECT. HYD STRGHT THRD SHORT SAE (R)	1	
36	135980	FITTING – 90° ELBOW #16 MALE ORB / #16 FEMALE JIC (T)	1	
40	151975	FILTER ELEMENT – 10 MICRON NOMINAL (PARKER)	1	
41	187567	MANIFOLD – PARKER C/W FITTINGS [28]	1	
	279490	**MANIFOLD – PARKER C/W FITTINGS** [29]	**1**	
42	30970	FITTING – ELBOW 90° HYDRAULIC (S)	1	
43	220948	VALVE – P.O. CHECK (POC)	1	
44	220949	VALVE – CHECK (CV1)	1	
45	220950	VALVE – CHECK (CV3, CV5) MANIFOLD 187567	2	
	245117	VALVE – CHECK (CV3, CV5) MANIFOLD **279490**	2	
46	220951	VALVE – P.O. RELIEF (RV1)	1	
47	220471	VALVE – P.O. RELIEF (RV2)	1	
48	220952	VALVE – PRESS. COMPENSATOR (FC) MANIFOLD 187567	1	
	245157	VALVE – PRESS. COMPENSATOR (FC) MANIFOLD **279490**	1	
49	220953	VALVE – NEEDLE (NV)	1	
50	**279491**	**VALVE – SPOOL TYPE LOGIC (LE3)**	**1**	
51	220955	VALVE – POPPET TYPE LOGIC (LE2)	1	
52	220956	VALVE – CHECK (CV2)	1	
53	220957	VALVE – SPOOL TYPE LOGIC (LE1)	1	
54	220958	VALVE – CHECK (CV4)	1	
55	245160	FITTING – FILTER ADAPTER (MANIFOLD **279490**) [30]	1	
A	187142	BOLT – HH 5/16 NC X 2.75 LG GR 5 ZP		
B	19965	BOLT – RHSN 3/8 NC X 1.0 GR 5 ZP		
C	21087	BOLT – HEX HD 5/16 NC X 1.0 LG GR 5 ZP		
D	30280	NUT – FLG SIDE LK SMTH FACE 5/16 NC GR 5 ZP		
E	101898	SCREW – HEX WASH HD THD ROLLING 3/8 NC X 5/8		
F	18636	WASHER – REG LOCK 5/16 IN. NOM. I.D. ZP		
G	44623	WASHER – FLAT		
H	30228	NUT – FLANGE DT SMOOTH FACE 0.375-16 UNC		

28. Use until stock of manifold is depleted. Includes filter element (MD #151975).
29. Replacement for Parker manifold (MD #187567) once stock is depleted. Includes filter element (MD #151975). Part #279490 is stamped on manifold for visual identification.
30. Two nuts (1 1/2-16 UN-2A) required to properly torque filter adapter fitting to manifold. Thread one nut approximately .50 inches (12.7mm) onto filter adapter fitting. Jam second nut to first and torque to 60-65 LB-FT (81-88 Nm). Remove both nuts. Filter (MD #151975) can then be threaded onto filter adapter fitting until seal engagement with the manifold. Turn filter an additional half turn.

11 Hydraulic Selector Header Tilt / Reel Fore-Aft

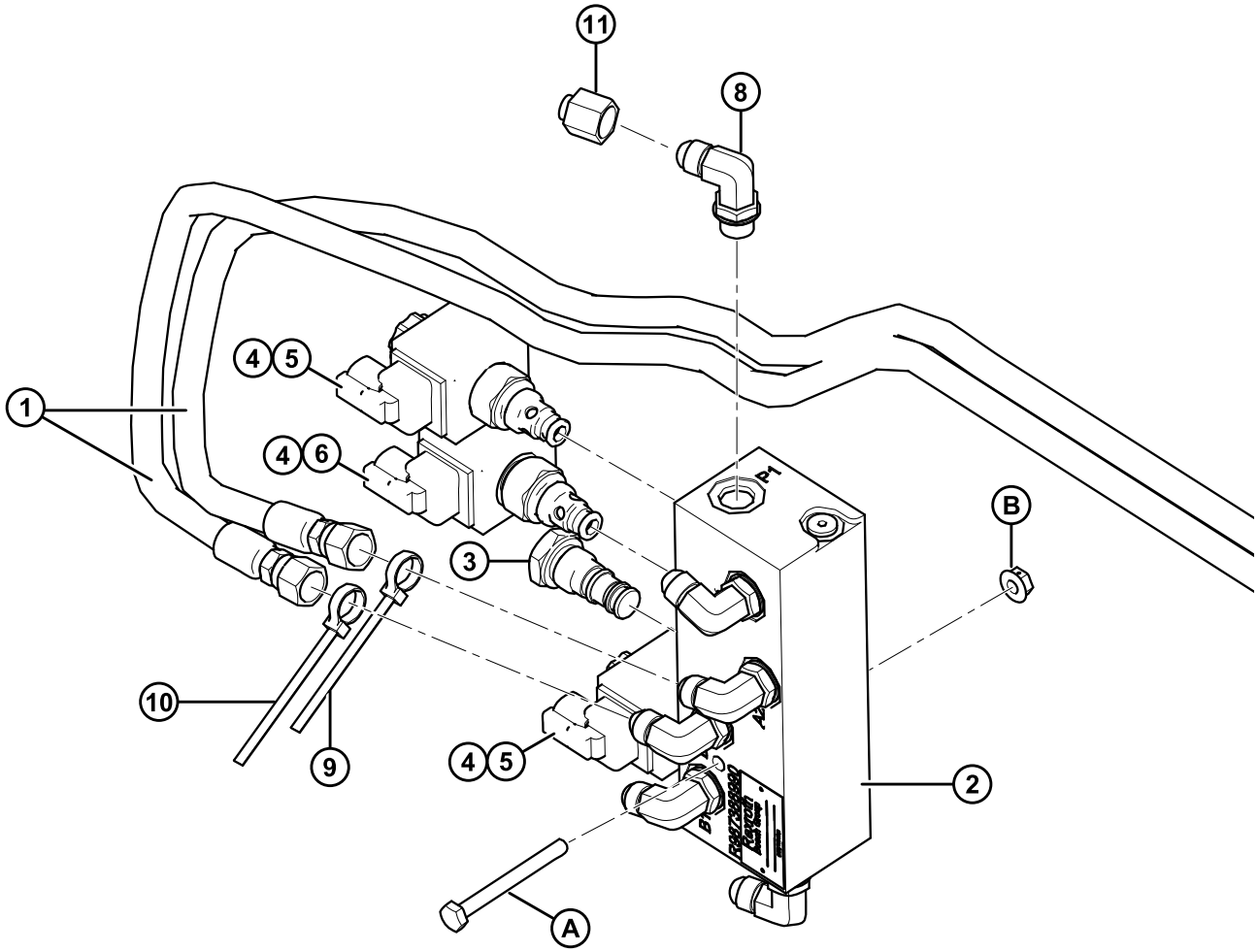

1004399

HYDRAULIC SELECTOR HEADER TILT / REEL FORE-AFT

Ref	Part Number	Description	Qty	Serial Number
1	133043	HOSE – HYD, 1/4 IN. I.D. 1730 MM LG 100R17, METAL REIN.	2	
2	220535	VALVE – SELECTOR C/W FITTINGS	1	
3	174938	VALVE – CHECK (V2)	1	
4	174941	COIL – VALVE (V5)	3	
5	174940	VALVE – SOLENOID (V4)	2	
6	174939	VALVE – SOLENOID (V3)	1	
7	174942	RESTRICTOR – ORIFICE (V6) NOT ILLUSTRATED	1	
8	30282	FITTING – ELBOW 90° HYDRAULIC	6	
9	49227	FASTENER – CABLE TIE (GREEN)	5	
10	40702	FASTENER – CABLE TIE (RED)	5	
11	30813	CAP – 3/8 IN. TUBE	4	
A	21854	BOLT – HH 1/4 NC X 2.5 LG GR 5 ZP		
B	135248	NUT – FLG SMTH FACE 1/4-20 NC GR 5 ZP CTR LK DT THD		

12 Selector Valve

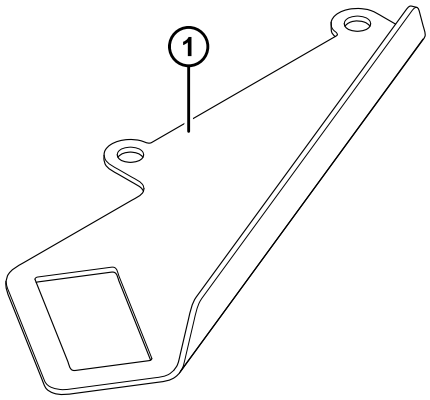

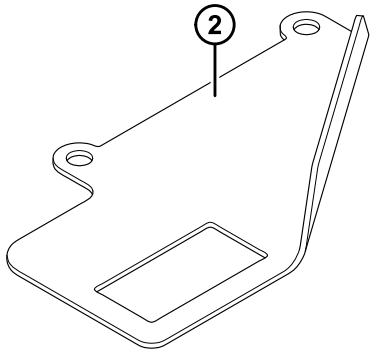

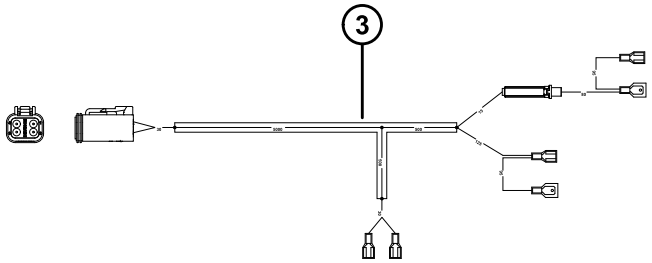

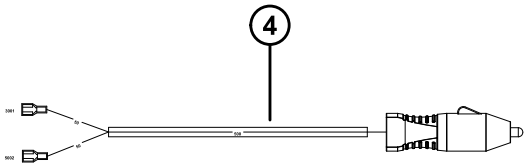

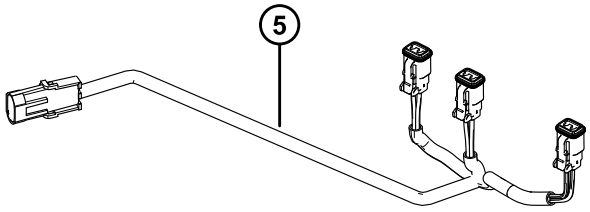

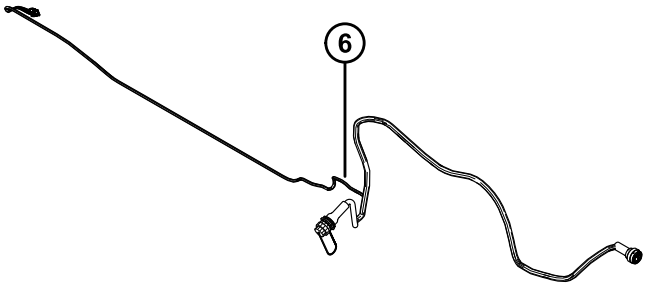

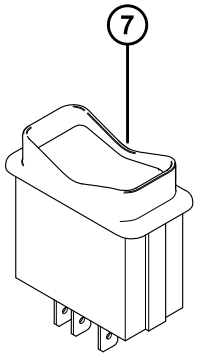

1018254

SELECTOR VALVE

Ref	Part Number	Description	Qty	Serial Number
1	158377	SUPPORT – ROCKER SWITCH, IN CAB MTG BRACKET FOR FORE-AFT/HEADER TILT [31]	1	
2	220734	SUPPORT – ROCKER SWITCH-IN CAB MTG BRKT FOR FORE-AFT/HEADER TILT SWITCH [32]	1	
3	220337	HARNESS – WIRING, HEADER TILT REEL FORE-AFT SELECTOR TO CAB [35]	1	
4	220570	HARNESS – WIRING, CIGARETTE LIGHTER PLUG [33]	1	
5	**129566**	**HARNESS – WIRE (JD 50 SERIES)** [34]	**1**	
6	**156614**	**HARNESS – WIRING (JD 50 SERIES)** [34]	**1**	
7	109064	SWITCH – ROCKER, HEADER TILT/FORE-AFT [35]	1	
8	16661	FASTENER – NYLON TIE (BLACK)	12	

31. All combine models except John Deere S Series and CNH/NH AFX, CX, and CR with integral switch.
32. John Deere S Series only.
33. Optional on all combine models. Allows for install without hardwire.
34. John Deere 50 Series only.
35. All combine models except John Deere 50 Series and CNH/NH AFX, CX, and CR with integral switch.

13 Float Linkage and Components

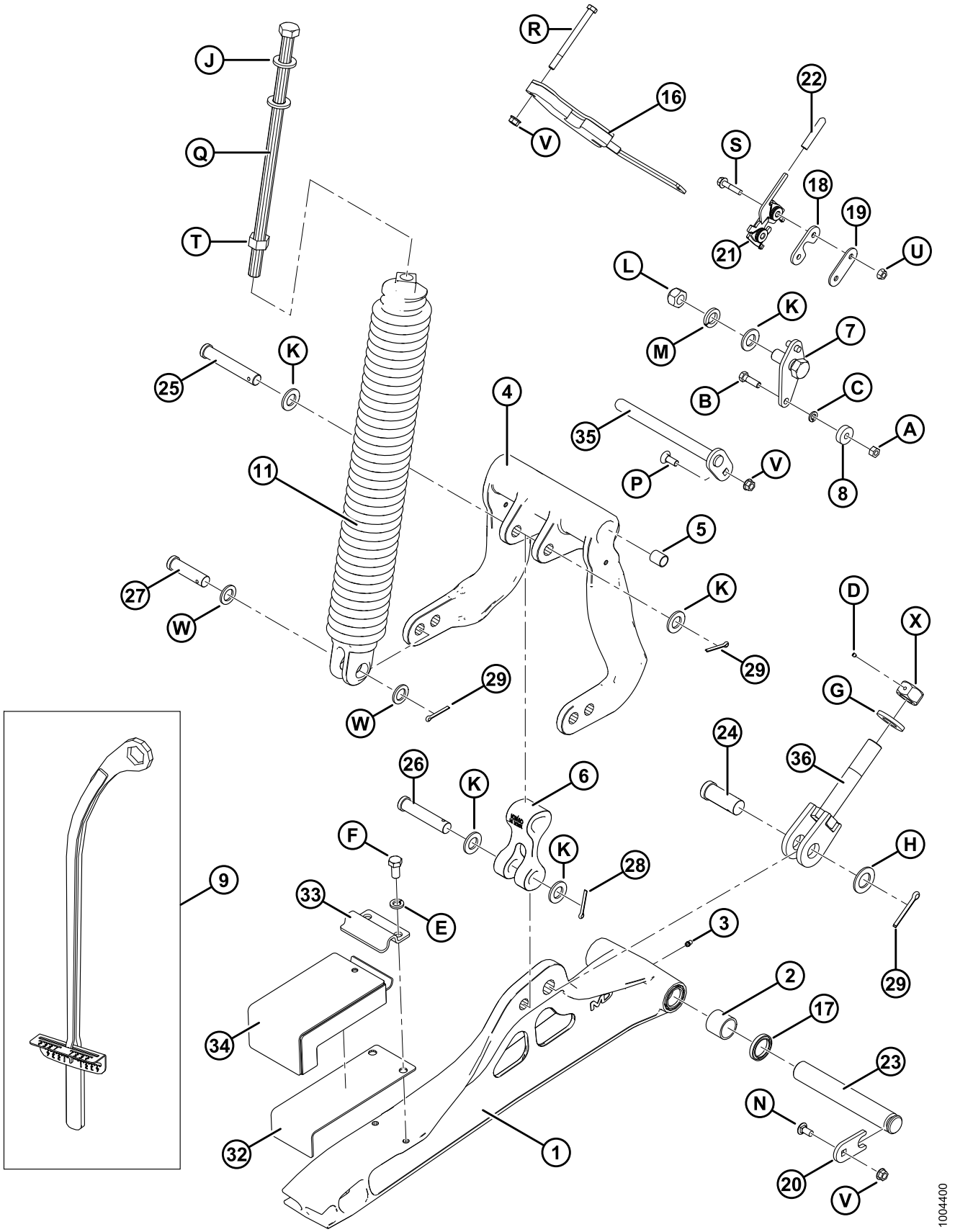

FLOAT LINKAGE AND COMPONENTS

Ref	Part Number	Description	Qty	Serial Number
1	174816	LINK – LOWER C/W BEARINGS	2	
2	100500	BEARING – NEEDLE	4	
3	18671	FITTING – LUBE 1/4 28 UNF	2	
4	156839	LEVER – BELL CRANK C/W BUSHINGS	2	
5	156501	BUSHING – PLASTIC	4	
6	156574	LINK – ARM	2	
7	125654	PIVOT – FLOAT WELDMENT	2	
8	18867	BEARING – BALL CYL OD C/W TWO SEALS	2	
9	229016	TOOL – WRENCH WELDMENT	1	
11	156511	SPRING – ASSEMBLY [36]		
	156565	SPRING – ASSEMBLY, C/W INNER SPRING (HEAVY DUTY) [36]		
16	125788	HANDLE – WELDT (LH)	1	
	125789	HANDLE – WELDT (RH)	1	
17	113222	SEAL	2	
18	156882	BAR – LATCH SPACER	2	
19	156883	BAR	2	
20	156212	PLATE	2	
21	134002	ASSY – STIRRUP LATCH (LH)	1	
	134003	ASSY – STIRRUP LATCH (RH)	1	
22	110817	COVER – SOFTEX GRIP	2	
23	156840	PIN	2	
24	156742	PIN – CLEVIS, 25.4 MM, 58 MM, ZN PL	2	
25	156741	PIN – CLEVIS	2	
26	20312	PIN – CLEVIS, 18.89 MM, 82 MM, ZN PL	2	
27	30463	PIN – CLEVIS, 18.89 MM, 58 MM, ZN PL	4	
28	18608	PIN – COTTER 3/16 DIA X 1.5 ZP	8	
29	18609	PIN – COTTER 1/4 DIA X 2 ZP	2	
32	125145	PLATE – LEAF SPRING	2	

36. There are four springs on each adapter, but the combination of springs (MD #156511 and MD #156565) varies depending on header size. 40-45 foot headers require 3 x 156511 and 1 x 156565 on the outboard RHS, all smaller headers require 4 x 156511.

FLOAT LINKAGE AND COMPONENTS

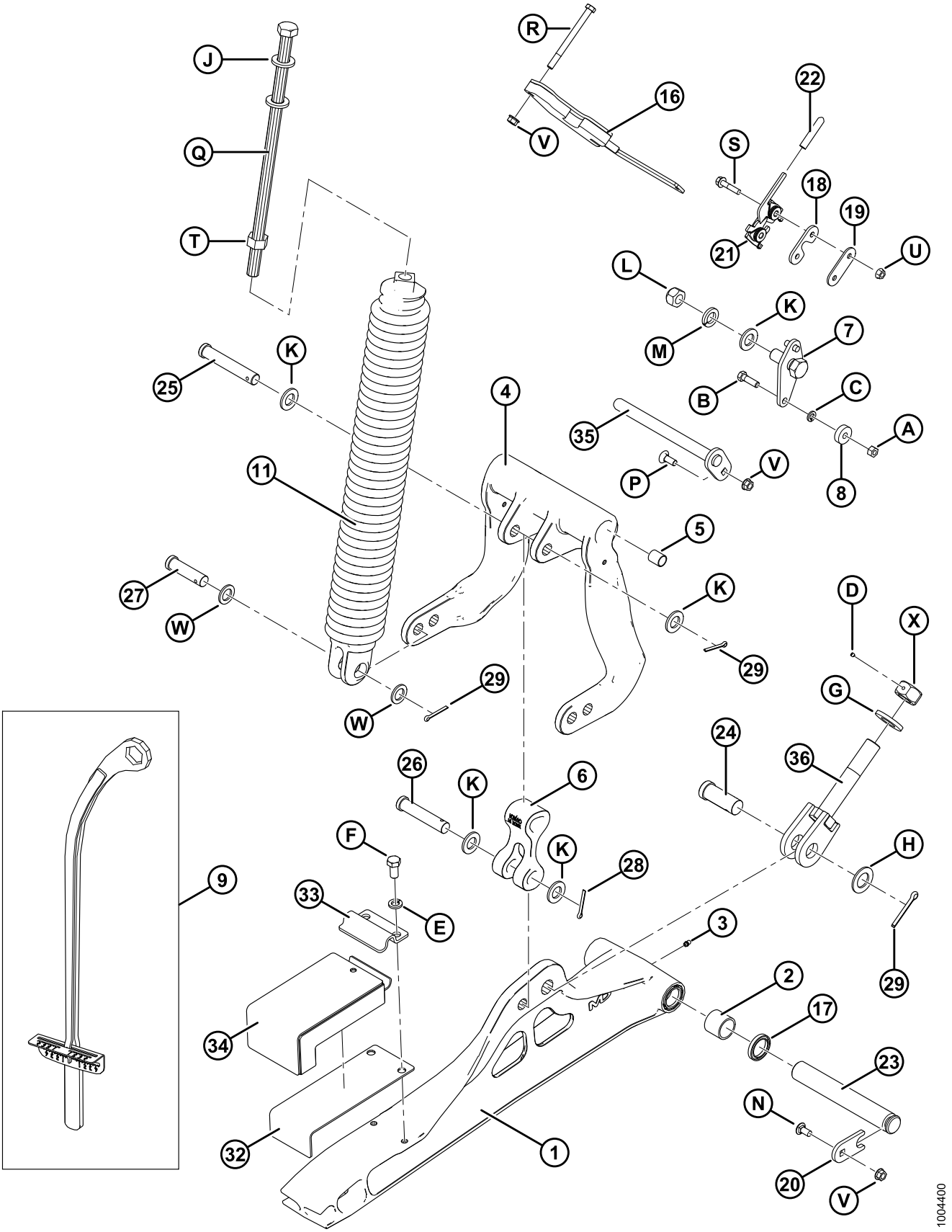

FLOAT LINKAGE AND COMPONENTS

Ref	Part Number	Description	Qty	Serial Number
33	125146	CLAMP	2	
34	174769	ASSY – RUBBER BLOCK FLEX	2	
	174775	ASSY – RUBBER BLOCK RIGID	2	
35	133014	PIN – PIVOT WELDT	2	
36	220679	BOLT – WELDT	2	
A	18590	NUT – HEX 3/8-16 UNC GR 5 ZP		
B	21264	BOLT – HH 3/8 NC X 1.25 LG GR 5 ZP		
C	18637	WASHER – REG LOCK 3/8 IN. NOM. I.D. ZP		
D	136596	SCREW – SET, HEX NYL TIP 1/4-20 X 1/4-AS-ZNPL		
E	18638	WASHER – REG LOCK 1/2 IN. NOM. I.D. ZP		
F	21575	BOLT – HH 1/2 NC X 1.0 LG GR 5 ZP		
G	31774	WASHER – FLAT		
H	156743	WASHER – FLAT		
J	21540	WASHER – HARDENED		
K	18601	WASHER – SAE FLAT 13/16 I.D. X 1.5 IN. O.D. ZP		
L	18689	NUT – HEX LOCK DT .750-10 UNC		
M	18640	WASHER – REG LOCK 3/4 IN. NOM. I.D. ZP		
N	21863	BOLT – RHSSN 3/8 NC X 0.75 LG GR 5 ZP		
P	19965	BOLT – RHSN 3/8-16 X 1-GR5-ZP		
Q	187203	BOLT – HH, SPECIAL 3/4 NC X 17.5 LG GR 5 ZP		
R	30080	BOLT – HH 3/8 NC X 4.5 LG GR 5 ZP		
S	135407	BOLT – HH FLG (SER FACE) 5/16 NC X 1.5 GR 5 ZP		
T	18593	NUT – HEX 3/4 10 UNC GR 5 ZP		
U	30280	NUT – FLG SIDE LK SMTH FACE 5/16 NC GR 5 ZP		
V	30228	NUT – FLANGE DT SMOOTH FACE 0.375-16 UNC		
W	1709	WASHER – FLAT		
X	133047	NUT – DOWNSTOP MACHINING		

14 Hydraulic Center-Link with Float and Tilt Indicators

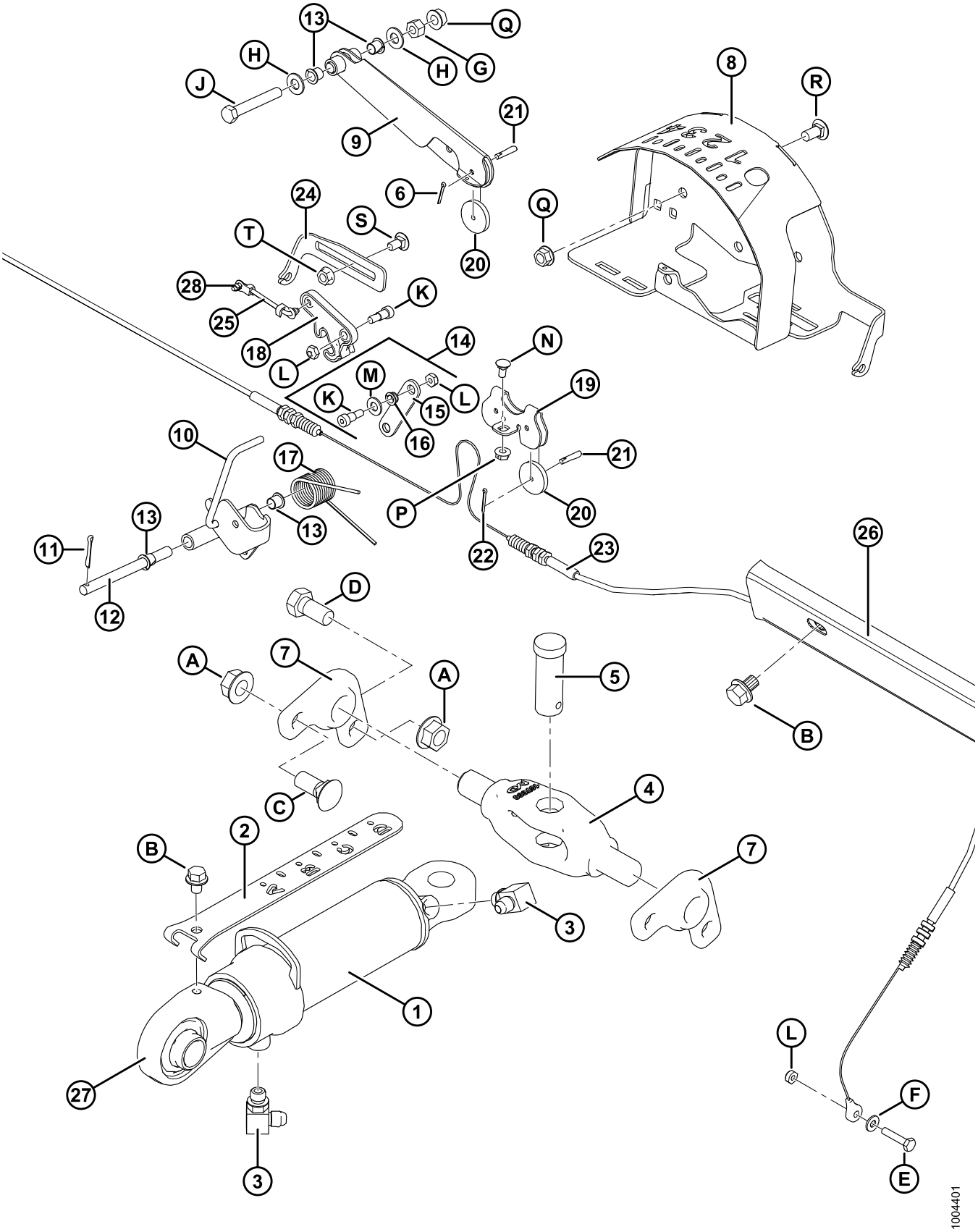

HYDRAULIC CENTER-LINK WITH FLOAT AND TILT INDICATORS

Ref	Part Number	Description	Qty	Serial Number
1	187621	CYLINDER – TOP LINK	1	
	123978	SEAL KIT		
2	187637	INDICATOR – TILT	1	
3	30282	FITTING – ELBOW 90° HYDRAULIC	2	
4	187660	PIVOT – MACHINING	1	
5	135995	PIN – CLEVIS	1	
6	18609	PIN – COTTER 1/4 DIA X 2 ZP	1	
7	187730	CASTING – PIVOT	2	
8	187641	HOUSING – INDICATOR WELDT	1	
9	187655	ARM – INDICATOR WELDT	1	
10	187645	INDICATOR – POINTER WELDMENT	1	
11	18605	PIN – COTTER 1/8 DIA X 1 ZP	1	
12	187669	PIN – STRAIGHT	1	
13	45439	BUSHING – PLASTIC	4	
14	187694	LINK – INDICATOR C/W BUSHINGS	1	
15	187659	LINK – INDICATOR	1	
16	156969	BUSHING – PLASTIC	2	
17	156843	SPRING – TORSION	1	
18	187194	ARM	1	
19	187708	SUPPORT – INDICATOR PULLEYS	1	
20	187653	PULLEY – CONTROL	3	
21	187701	PIN – STRAIGHT	3	
22	18604	PIN – COTTER 3/32 DIA X 3/4 ZP	3	
23	187658	CABLE – FLOAT INDICATOR 5 SERIES	1	
24	187793	SUPPORT – AHHC CABLE ADJUSTER	1	
25	158633	ROD – LINKAGE	1	
26	133249	HOLDER – HOSE	1	
27	187822	EYE – CYLINDER END	1	
28	**153492**	**CLIP – ROD END** [37]	**2**	

37. Clip (MD #153492) is used on both ends of rod (MD #158633).

HYDRAULIC CENTER-LINK WITH FLOAT AND TILT INDICATORS

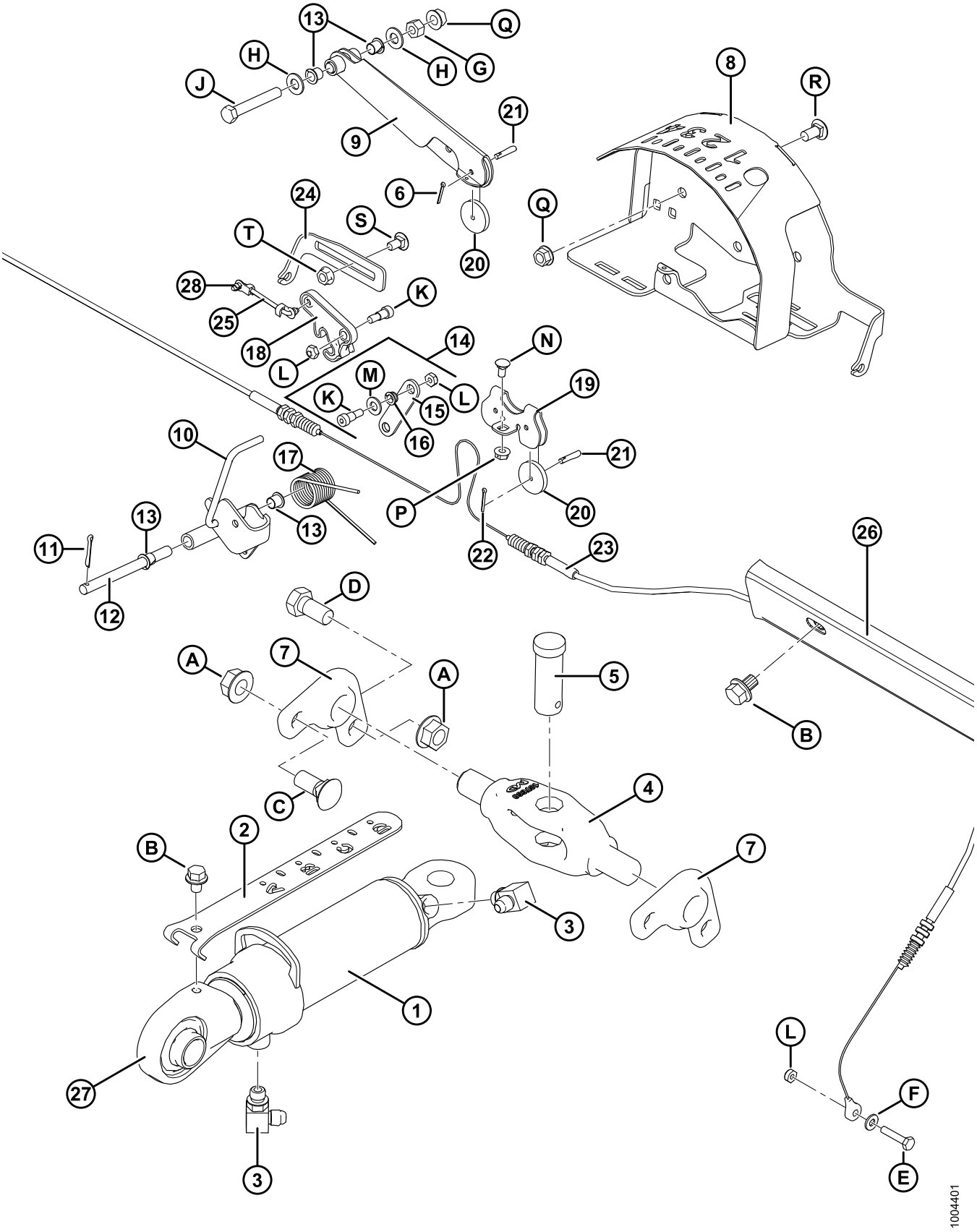

HYDRAULIC CENTER-LINK WITH FLOAT AND TILT INDICATORS

Ref	Part Number	Description	Qty	Serial Number
A	50225	NUT – FLANGE DT SMOOTH FACE .625-11 UNC		
B	30693	BOLT – FLANGE (SER FACE) .375-16 UNC X 0.50 LG		
C	18523	BOLT – RHSN 5/8 NC X 1.5 GR 5 ZP		
D	21585	BOLT – HH 5/8 NC X 1.25 LG GR 5 ZP		
E	30942	BOLT – HH 1/4 NC X 1.25 LG GR 5 ZP		
F	18596	WASHER – SAE FLAT 9/32 I.D. X 5/8 IN. O.D. ZP		
G	18590	NUT – HEX 3/8-16 UNC GR 5 ZP		
H	18598	WASHER – SAE FLAT 13/32 I.D. X 13/16 IN. O.D. ZP		
J	21102	BOLT – HH 3/8 NC X 2.5 LG GR 5 ZP		
K	135423	BOLT – SHOULDER 5/16 DIA X 3/8 X 1/4-20 UNRC		
L	18724	NUT – HEX LOCK DT 1/4-20 UNC ZP		
M	18597	WASHER – SAE FLAT 11/32 I.D. X 11/16 IN. O.D. ZP		
N	21926	BOLT – RHSN 1/4 NC X 0.5 GR 5 ZP		
P	135248	NUT – FLG SMTH FACE 1/4-20 NC GR 5 ZP CTR LK DT THD		
Q	30228	NUT – FLANGE DT SMOOTH FACE 0.375-16 UNC		
R	21863	BOLT – RHSSN 3/8 NC X 0.75 LG GR 5 ZP		
S	135305	BOLT – RHSN 5/16 NC X 0.63 GR 5 ZP		
T	30280	NUT – FLG SIDE LK SMTH FACE 5/16 NC GR 5 ZP		

15 Decals

1

2

3

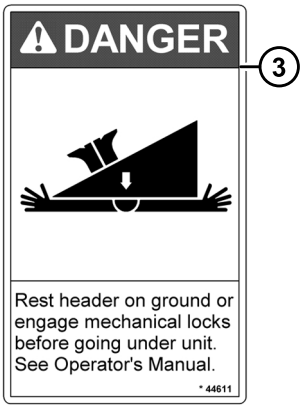

4

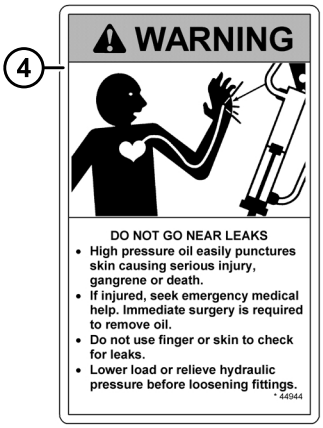

5

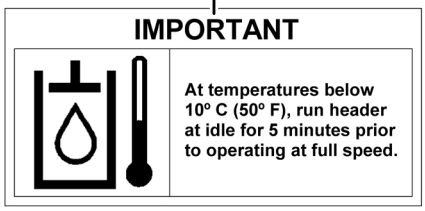

6

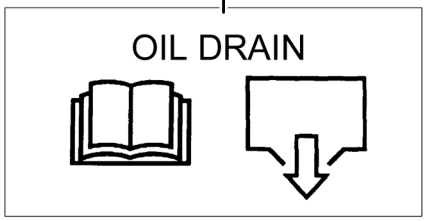

7

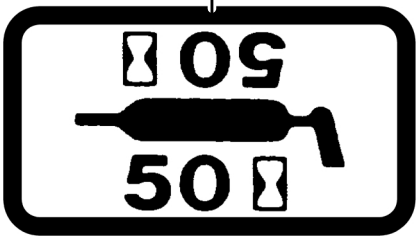

8

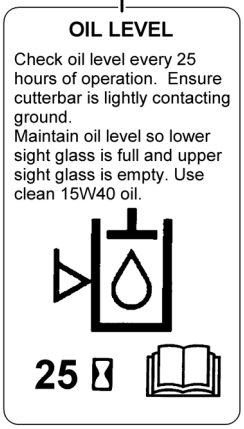

9

10

11

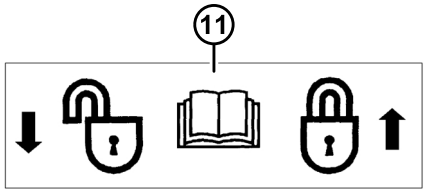

12

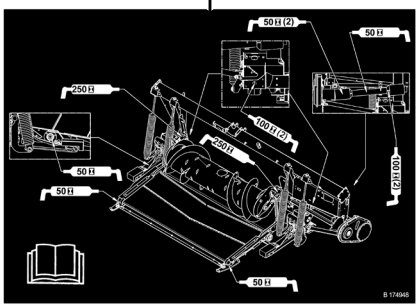

13

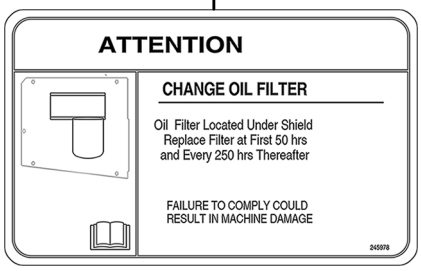

14

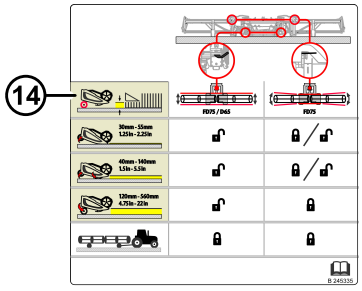

15

1018250

DECALS

Ref	Part Number	Description	Qty	Serial Number
1	30316	DECAL – DANGER: ROTATING DRIVELINE		
2	36651	DECAL – DANGER: DRIVELINE GUARD MISSING		
3	44611	DECAL – DANGER: HEADER HAZARD		
4	44944	DECAL – WARNING: HYDRAULIC OIL PRESSURE		
5	133086	DECAL – IMPORTANT: OIL OPERATING TEMPERATURE		
6	133537	DECAL – ADAPTER OIL DRAIN		
7	23165	DECAL – 50 HR LUBE		
	115759	DECAL – 100 HR LUBE		
8	174960	DECAL – ADAPTER OIL LEVEL		
9	32070	DECAL – PATENT NUMBER		
10	133532	DECAL – ADAPTER FLOAT LOCK (LH)		
11	133533	DECAL – ADAPTER FLOAT LOCK (RH)		
12	174948	DECAL – GREASE, CA25		
13	**245978**	**DECAL – ATTENTION (CHANGE OIL FILTER)**		
14	245335	DECAL – HEADER ADJUSTMENT		
15	140225	STRIP – ANTI SLIP (LARGE)		
	174131	STRIP – ANTI SLIP (SMALL)		

16 Decals – French

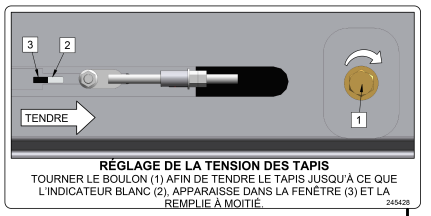

1

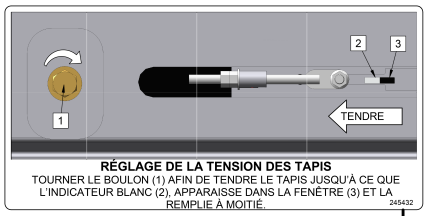

2

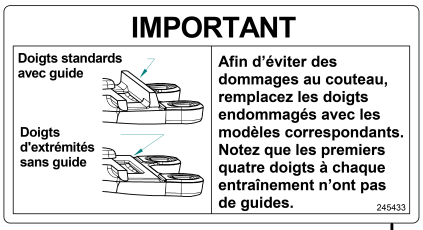

3

4

5

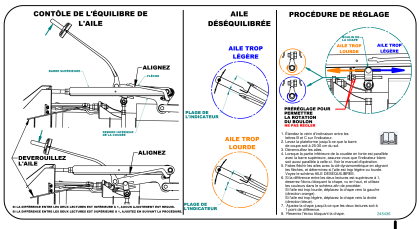

6

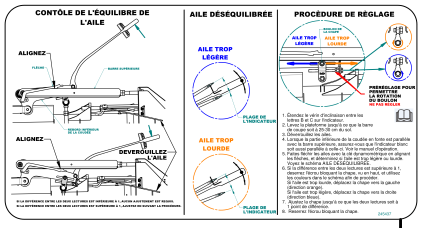

7

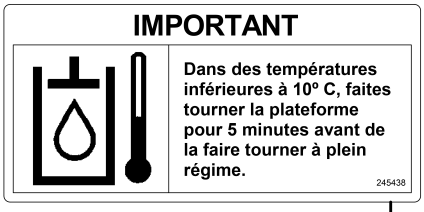

8

9

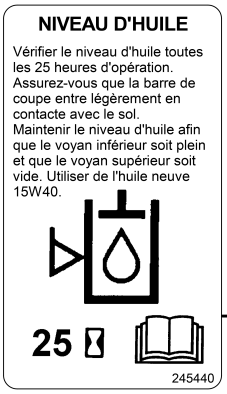

10

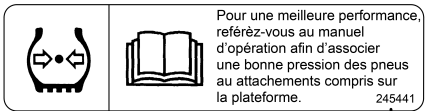

11

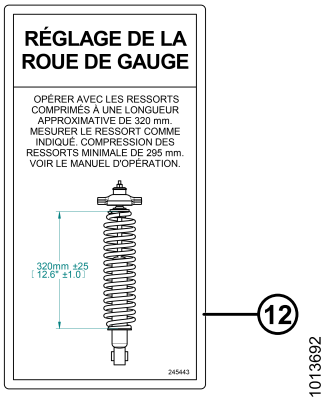

12

1013692

DECALS – FRENCH

Ref	Part Number	Description	Qty	Serial Number
1	245428	DECAL – LH DRAPER TENSION, FRENCH		
2	245432	DECAL – RH DRAPER TENSION, FRENCH		
3	245433	DECAL – IMPORTANT: GUARDS, FRENCH		
4	245434	DECAL – LH WING BALANCE ADJUSTMENT, FRENCH		
5	245435	DECAL – RH WING BALANCE ADJUSTMENT, FRENCH		
6	245436	DECAL – LH WING BALANCE, FRENCH		
7	245437	DECAL – RH WING BALANCE, FRENCH		
8	245438	DECAL – IMPORTANT: OIL OPERATING TEMP, FRENCH		
9	245439	DECAL – ADAPTER OIL DRAIN, FRENCH		
10	245440	DECAL – ADAPTER OIL LEVEL, FRENCH		
11	245441	DECAL – TIRE PRESSURE, FRENCH		
12	245443	DECAL – GAUGE WHEEL SETTING, FRENCH		

17 Decals – Portuguese

1

2

3

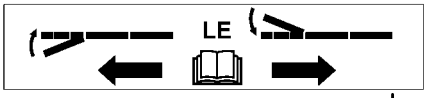

4

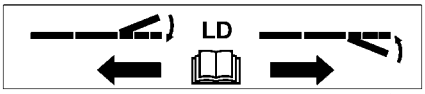

5

6

7

8

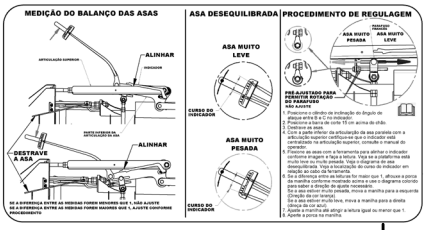

9

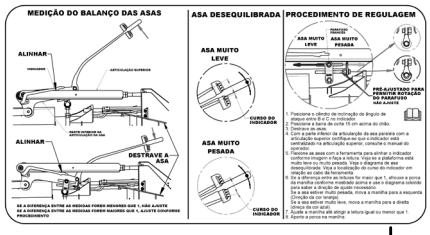

10

11

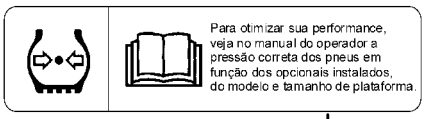

12

1004412

DECALS – PORTUGUESE

Ref	Part Number	Description	Qty	Serial Number
1	220817	DECAL – IMPORTANT: GUARDS, PORTUGUESE		
2	220818	DECAL – IMPORTANT: OIL OPERATING TEMP, PORT.		
3	220819	DECAL – ADAPTER OIL DRAIN, PORTUGUESE		
4	220820	DECAL – LH WING BALANCE ADJUSTMENT, PORTUGUESE		
5	220821	DECAL – RH WING BALANCE ADJUSTMENT, PORTUGUESE		
6	220822	DECAL – ADAPTER OIL LEVEL, PORTUGUESE		
7	220823	DECAL – GAUGE WHEEL SETTING, PORTUGUESE		
8	220824	DECAL – LH DRAPER TENSION, PORTUGUESE		
9	220825	DECAL – LH WING BALANCE, PORTUGUESE		
10	220826	DECAL – RH WING BALANCE, PORTUGUESE		
11	220836	DECAL – RH DRAPER TENSION, PORTUGUESE		
12	220885	DECAL – TIRE PRESSURE, PORTUGUESE		

18 Decals – Russian

1

2

3

4

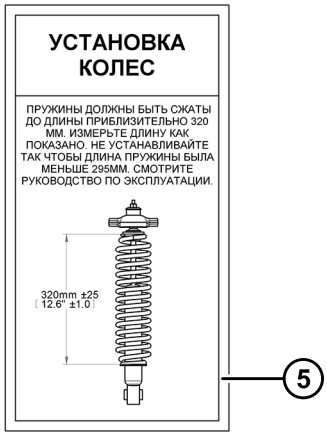

5

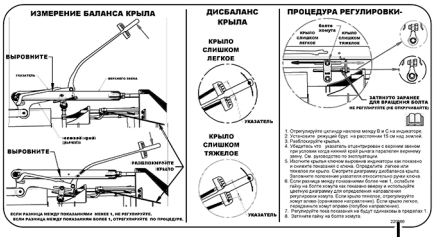

6

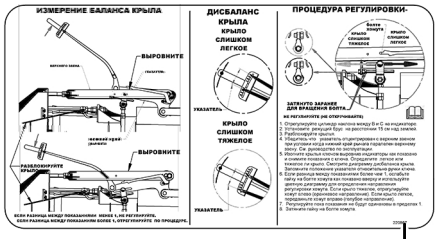

7

8

9

10

11

12

1013691

DECALS – RUSSIAN

Ref	Part Number	Description	Qty	Serial Number
1	166309	DECAL – TIRE PRESSURE, RUSSIAN		
2	220831	DECAL – LH DRAPER TENSION, RUSSIAN		
3	220832	DECAL – IMPORTANT: GUARDS, RUSSIAN		
4	220834	DECAL – RH DRAPER TENSION, RUSSIAN		
5	220863	DECAL – GAUGE WHEEL SETTING, RUSSIAN		
6	220866	DECAL – RH WING BALANCE, RUSSIAN		
7	220867	DECAL – LH WING BALANCE, RUSSIAN		
8	220868	DECAL – IMPORTANT: OIL OPERATING TEMP, RUSSIAN		
9	220869	DECAL – LH WING BALANCE ADJUSTMENT, RUSSIAN		
10	220870	DECAL – RH WING BALANCE ADJUSTMENT, RUSSIAN		
11	220871	DECAL – ADAPTER OIL DRAIN, RUSSIAN		
12	220872	DECAL – ADAPTER OIL LEVEL, RUSSIAN		

19 Decals – Spanish

1

2

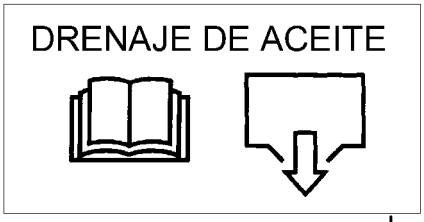

3

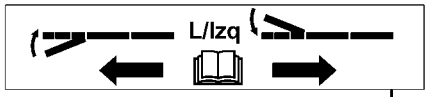

4

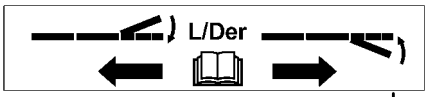

5

6

7

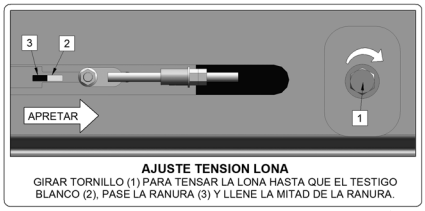

8

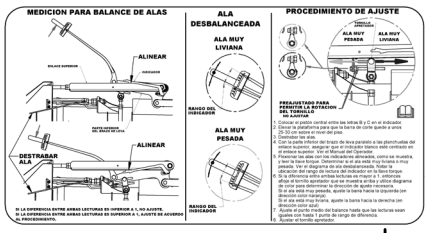

9

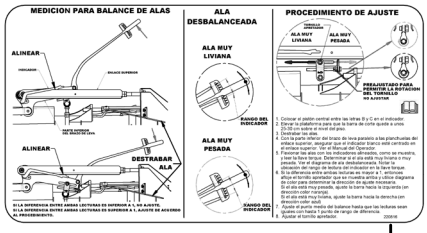

10

11

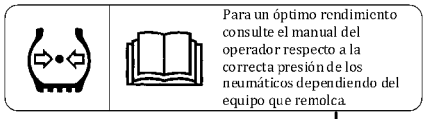

12

1004411

DECALS – SPANISH

Ref	Part Number	Description	Qty	Serial Number
1	220807	DECAL – IMPORTANT: GUARDS, SPANISH		
2	220808	DECAL – IMPORTANT: OIL OPERATING TEMP, SPANISH		
3	220809	DECAL – ADAPTER OIL DRAIN, SPANISH		
4	220810	DECAL – LH WING BALANCE ADJUSTMENT, SPANISH		
5	220811	DECAL – RH WING BALANCE ADJUSTMENT, SPANISH		
6	220812	DECAL – ADAPTER OIL LEVEL, SPANISH		
7	220813	DECAL – GAUGE WHEEL SETTING, SPANISH		
8	220814	DECAL – LH DRAPER TENSION, SPANISH		
9	220815	DECAL – LH WING BALANCE, SPANISH		
10	220816	DECAL – RH WING BALANCE, SPANISH		
11	220835	DECAL – RH DRAPER TENSION, SPANISH		
12	220876	DECAL – TIRE PRESSURE, SPANISH		

20 AGCO, Gleaner – Adapter Completion

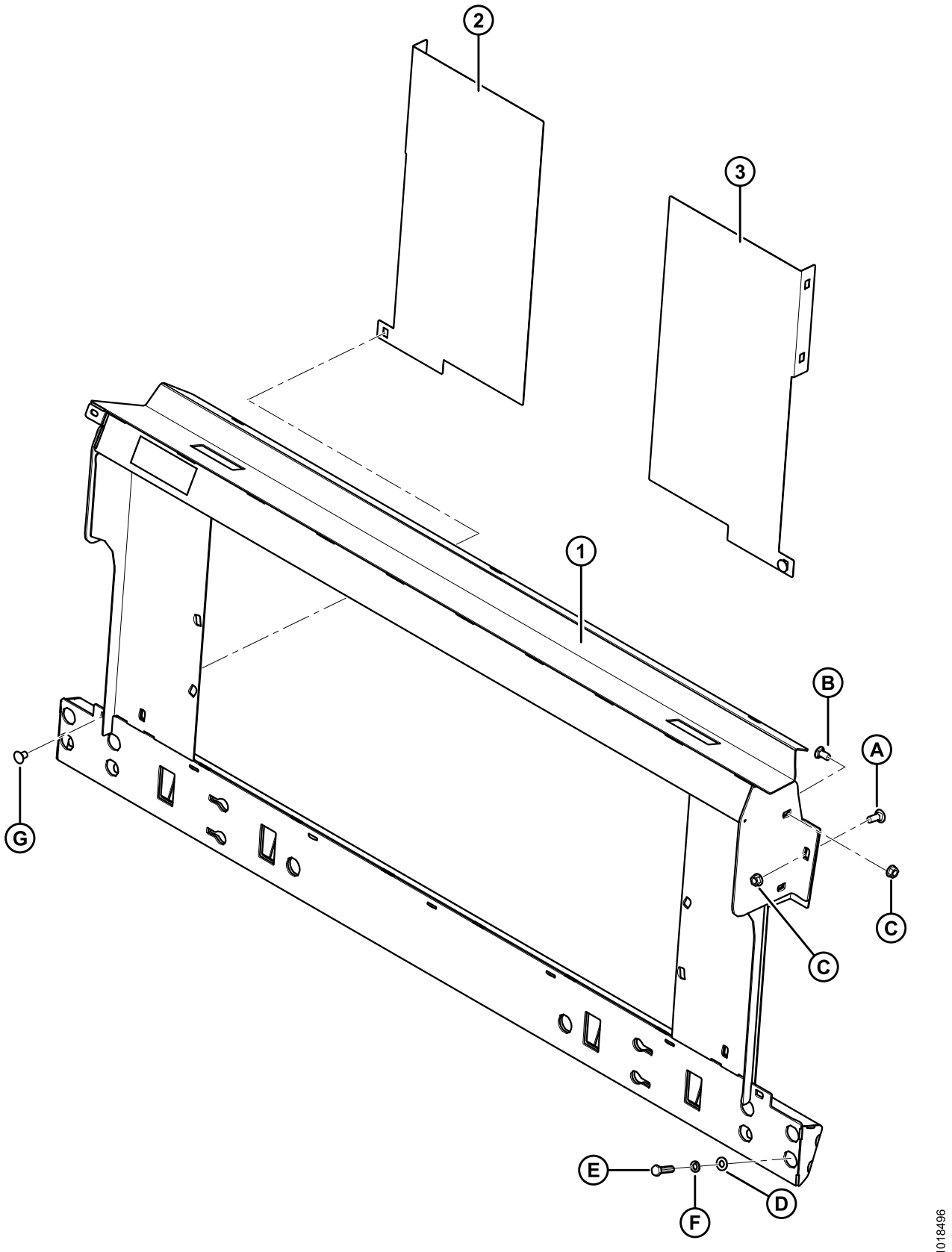

AGCO, GLEANER – ADAPTER COMPLETION

Ref	Part Number	Description	Qty	Serial Number
1	133672	FRAME – AGCO TRANS LAT TILT C/W DECAL	1	
	245852	**FRAME – GLEANER TRANS LAT TILT C/W DECAL**	**1**	
2	**133980**	**FILLER – A65/660/9690, AGCO ONLY (LH)**	**1**	
3	**133981**	**FILLER – A65/660/9690, AGCO ONLY (RH)**	**1**	
A	21471	BOLT – RHSN 1/2 NC X 1.25 GR 5 ZP		
B	21868	BOLT – RHSSN 1/2 NC X 1.0 GR 5 ZP		
C	50186	NUT – FLANGE LOCK SM FACE DT 0.500-13 UNC GR 5		
D	18599	WASHER – SAE FLAT 17/32 I.D. X 1-1/16 IN. O.D. ZP		
E	50072	BOLT – HH 1/2 NC X 1.75 TFL GR 5 ZP		
F	18638	WASHER – REG LOCK 1/2 IN. NOM I.D. ZP		
G	**105069**	**BOLT – RHSSN 1/2 NC X 0.75 GR 5 ZP**		

NOTE:
(MD #B5671) – AGCO (EXCEPT GLEANER R/S) COMPLETION PACKAGE, (MD #B5761) – GLEANER “R” AND “S” SERIES COMPLETION PACKAGE includes Adapter, Hydraulic, and Electrical Completion Packages to complete a stand-alone CA25 or to convert an existing factory installed CA25. Kits available through Whole Goods only.

21 AGCO, Gleaner – Hydraulic Completion

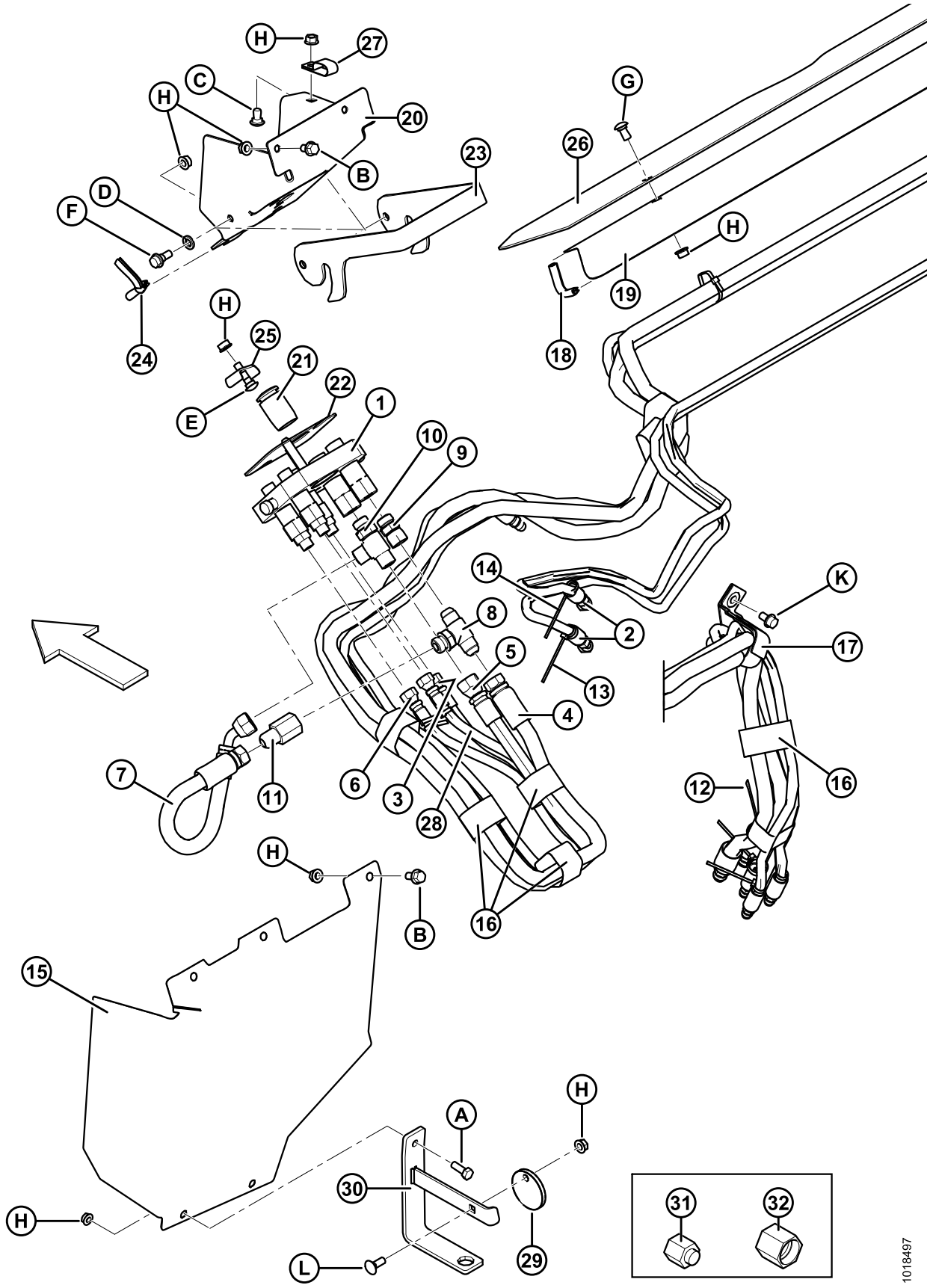

AGCO, GLEANER – HYDRAULIC COMPLETION

Ref	Part Number	Description	Qty	Serial Number
1	187183	COUPLER – HYD QUICK CON. (AGCO, GLEANER)	1	
2	156759	HOSE – HYDRAULIC 1/4 IN. I.D. 4330 MM LG 100R17	2	
3	156910	HOSE – HYDRAULIC 1/4 IN. I.D. 5530 MM LG 100R17	1	
4	156938	HOSE – HYDRAULIC 1/2 IN. I.D. 5530 MM LG 100R17	1	
5	156939	HOSE – HYDRAULIC 1/2 IN. I.D. 5530 MM LG 100R17	1	
6	220658	HOSE – HYDRAULIC 1/4 IN. I.D. 1650 MM LG 100R17	1	
7	187032	HOSE – HYD 1/2 IN. I.D. 400 MM LG 100R17, METAL REIN.	1	
8	30560	FITTING – TEE HYD STR THD BRANCH TEE C/W O-RING	1	
9	49529	FITTING – ADAPTER HYD	1	
10	135598	FITTING – TEE HYD STR THD RUN TEE C/W O-RING	1	
11	187031	VALVE – CHECK	1	
12	40701	FASTENER – CABLE TIE (YELLOW)	**3**	
13	40702	FASTENER – CABLE TIE (RED)	**9**	
14	49227	FASTENER – CABLE TIE (GREEN)	**9**	
15	133268	COVER – COUPLERS	1	
16	135444	FASTENER – CINCH STRAP 6 IN. LG	**13**	
17	163598	STRAP – VELCRO, HANGING	1	
18	42589	MOULDING	2	
19	156725	COVER – HOSE	1	
20	187030	BRACKET – COUPLER (AGCO)	1	
21	129148	PLUG – RUBBER	1	
22	**187018**	**PAD – RUBBER**	**1**	
23	129143	LATCH – COUPLER BRACKET	1	
24	109791	MOULDING	1	
25	103351	HOLDER	1	
26	187723	COVER – TOP FEED AUGER	1	
27	135234	CLAMP – DOUBLE HOSE INSULATED	1	
28	220657	HOSE – HYDRAULIC 1/4 IN. I.D. 1450 MM LG 100R17	1	
29	**133165**	**DISC – LOCK, DRIVELINE HANGER**	**1**	
30	**133166**	**BRACKET – DRIVELINE HANGER WELDT**	**1**	

NOTE:
(MD #B5671) – AGCO (EXCEPT GLEANER R/S) COMPLETION PACKAGE, (MD #B5761) – GLEANER “R” AND “S” SERIES COMPLETION PACKAGE includes Adapter, Hydraulic, and Electrical Completion Packages to complete a stand-alone CA25 or to convert an existing factory installed CA25. Kits available through Whole Goods only.

AGCO, GLEANER – HYDRAULIC COMPLETION

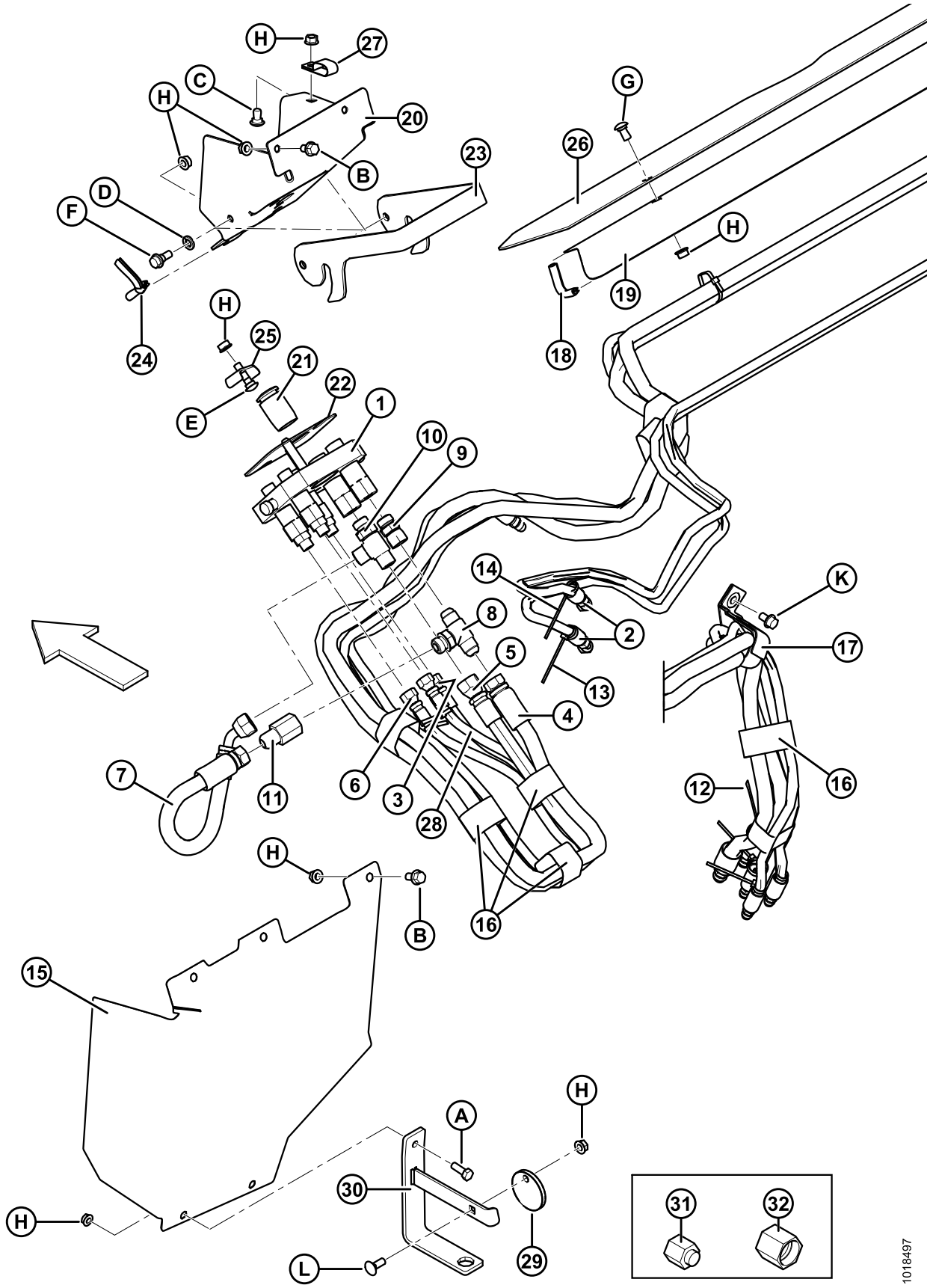

Ref	Part Number	Description	Qty	Serial Number
31	30813	CAP – 3/8 IN. TUBE 37° FLARE (FOR SHIPPING ONLY)	1	
32	108233	CAP – 1/2 IN. TUBE (FOR SHIPPING ONLY)	1	
A	20077	BOLT – HEX HD 3/8 NC X 1.0 LG GR 5 ZP		
B	21821	BOLT – HH FLG (SER FACE) 3/8 NC X 0.75 GR 5 ZP		
C	21472	BOLT – RHSN 3/8 NC X 0.75 GR 5 ZP		
D	18652	WASHER – REG LOCK 7/16 IN. NOM. I.D. ZP		
E	21484	BOLT – RHSN 3/8 NC X 1.5 LG GR 5 ZP		
F	27647	BOLT – SHOULDER		
G	21863	BOLT – RHSSN 3/8 NC X 0.75 LG GR 5 ZP		
H	30228	NUT – FLANGE DT SMOOTH FACE 0.375-16 UNC		
J	30280	NUT – FL PREV-TOR SIDE DT SM FACE 0.312-18 UNC GR 5		
K	101898	SCREW – SELF TAPPING 3/8 NC X 5/8 LG		
L	**19965**	**BOLT – RHSN 3/8 NC X 1.0 GR 5 ZP**		

NOTE:
(MD #B5671) – AGCO (EXCEPT GLEANER R/S) COMPLETION PACKAGE, (MD #B5761) – GLEANER “R” AND “S” SERIES COMPLETION PACKAGE includes Adapter, Hydraulic, and Electrical Completion Packages to complete a stand-alone CA25 or to convert an existing factory installed CA25. Kits available through Whole Goods only.

22 AGCO, Gleaner – Electrical Completion

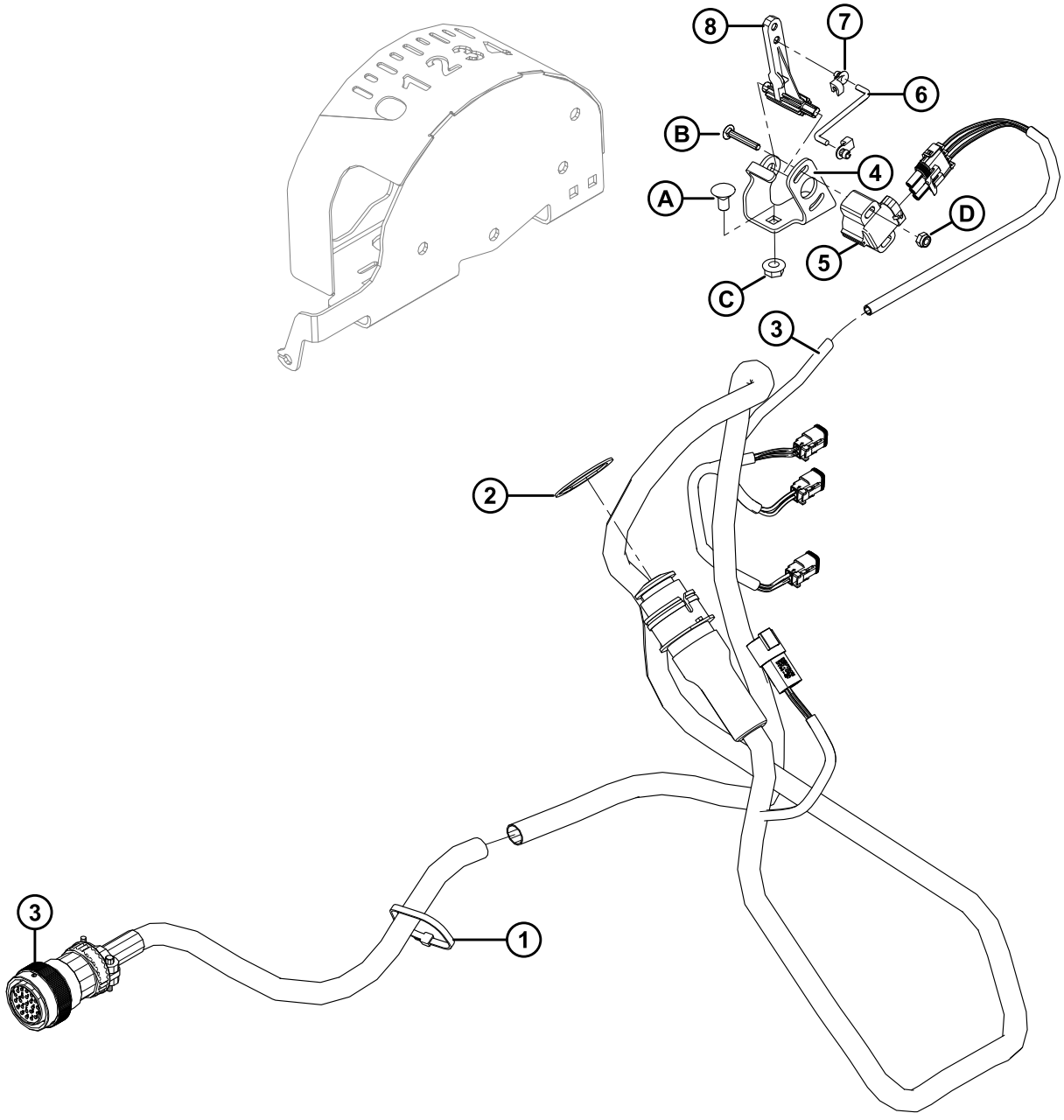

1004440

Ref	Part Number	Description	Qty	Serial Number
1	21763	FASTENER – CABLE TIE (BLACK) [38]		
	16661	FASTENER – NYLON TIE [39]		
2	135267	RING – INVERTED EXT RETAINING	1	
3	220347	HARNESS – WIRING AGCO AHHC	1	
4	187670	SUPPORT – SENSOR MOUNT (CNH / DEERE / AGCO)	1	
5	158069	CONTROL – POTENTIOMETER	1	
6	158633	ROD – LINKAGE	1	
7	153492	CLIP – ROD END	2	
8	187193	ARM – SENSOR CONTROL	1	
A	135305	BOLT – RHSN 5/16 NC X 0.63 GR 5 ZP		
B	136018	BOLT – RHSN, #10-24 NC X 1.25 IN. LG		
C	30280	NUT – FLG SIDE LK SMTH FACE 5/16 NC GR 5 ZP		
D	105197	NUT – HEX LOCK .187-24 UNC		

NOTE:
(MD #B5671) – AGCO (EXCEPT GLEANER R/S) COMPLETION PACKAGE, (MD #B5761) – GLEANER “R” AND “S” SERIES COMPLETION PACKAGE includes Adapter, Hydraulic, and Electrical Completion Packages to complete a stand-alone CA25 or to convert an existing factory installed CA25. Kits available through Whole Goods only.

38. Quantities: 2016 and prior = 3 / 2017 and later = 1
39. Quantities: 2016 and prior = 15 / 2017 and later = 12

23 Gleaner – R/S Series Feeding Kit

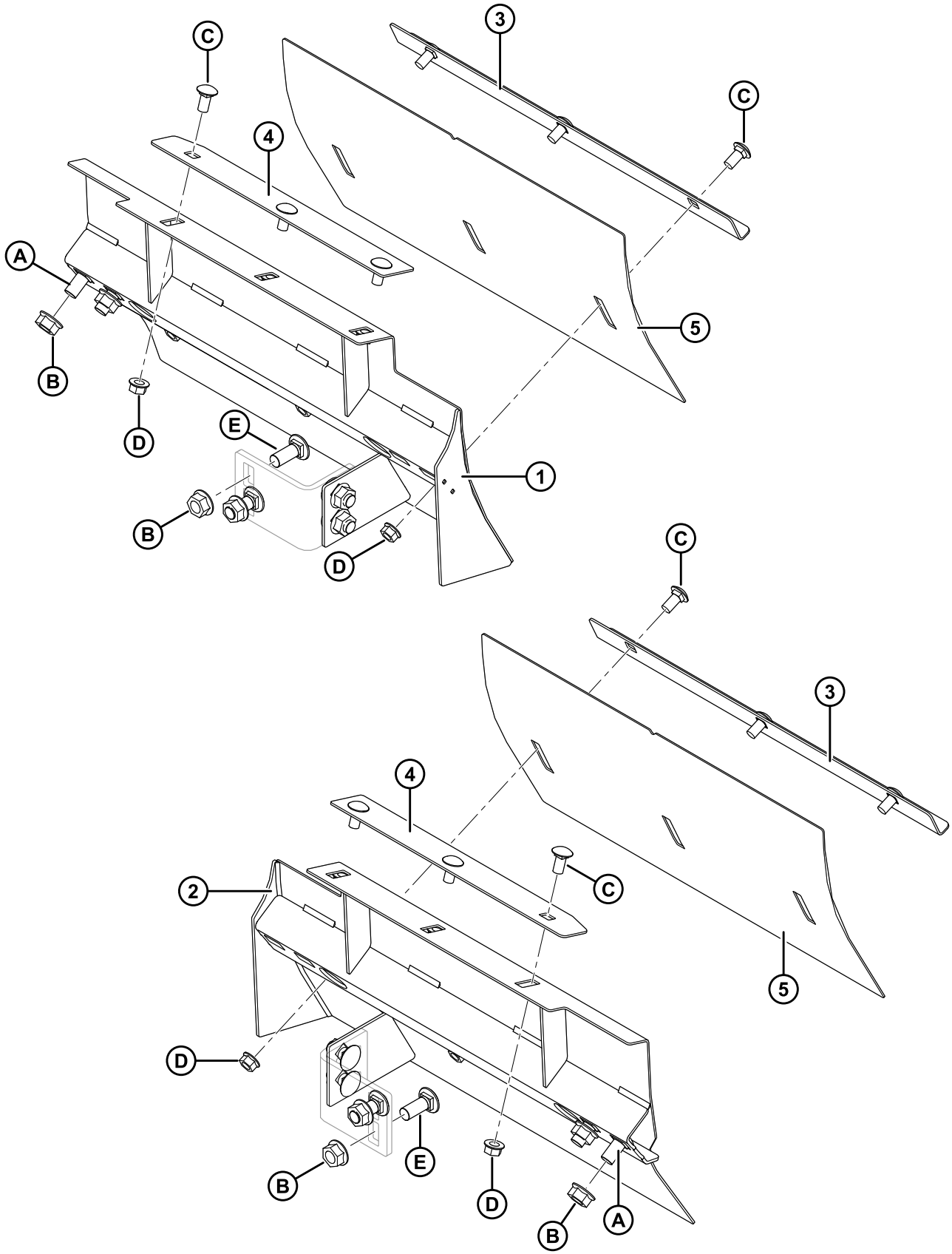

GLEANER – R/S SERIES FEEDING KIT

Ref	Part Number	Description	Qty	Serial Number
	B6151	**KIT – GLEANER R/S SERIES FEEDING** [40]		
1	245751	DEFLECTOR – WELDT GLEANER R (LH)	1	
2	245752	DEFLECTOR – WELDT GLEANER R (RH)	1	
3	245749	ANGLE – STRIPPER	2	
4	245750	STRIPPER	2	
5	**245757**	**DEFLECTOR – GAP ADJUSTMENT, GLEANER R/S (STAINLESS STEEL)**	**2**	
A	21868	BOLT – RHSSN 1/2 NC X 1.0 GR 5 ZP		
B	50186	NUT – FLG LOC SM FACE DT 0.500-13 UNC GR 5		
C	21863	BOLT – RHSSN 3/8 NC X 0.75 LG GR 5 ZP		
D	30228	NUT – FLANGE DT SMOOTH FACE 0.375-16 UNC		
E	114233	BOLT – RHSSN 1/2 NC X 1.25 GR 5 ZP		

40. Kits available through Whole Goods only.

24 Gleaner – R/S Series Narrow Completion Kit

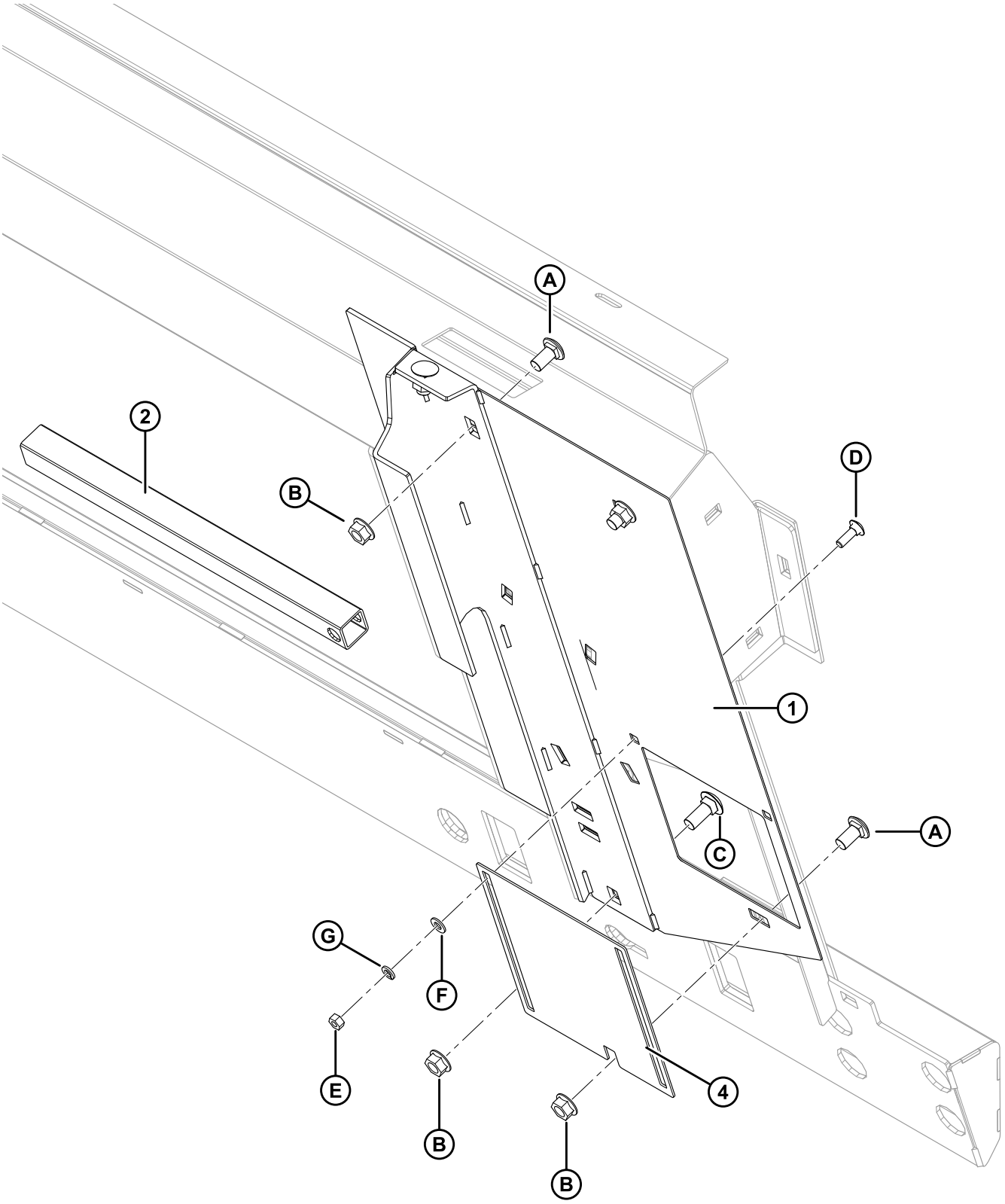

Ref	Part Number	Description	Qty	Serial Number
1	**245816**	**FILLER – WELDMENT (RH)**	**1**	
	245815	**FILLER – WELDMENT (LH) NOT ILLUSTRATED**	**1**	
2	133984	TUBE – SQUARE, NARROW AGCO	1	
3	**245763**	**DOOR – ACCESS**	**2**	
A	21868	BOLT – RHSSN 1/2 NC X 1.0 GR 5 ZP		
B	50186	NUT – FLG LOC SM FACE DT 0.500-13 UNC GR 5		
C	21471	BOLT – RHSN 1/2-13 X 1.25 GR 5 ZP		
D	**21282**	**BOLT – RHSN 5/16-18 X 1 GR 5 ZP**		
E	**18589**	**NUT – HEX 5/16-18 UNC GR 5 ZP**		
F	**18597**	**WASHER – SAE FLAT 11/32 I.D. X 11/16 IN. O.D. ZP**		
G	**18636**	**WASHER – REG. LOCK 5/16 IN. NOM. I.D. ZP**		

25 Case 20 Series – Adapter Completion

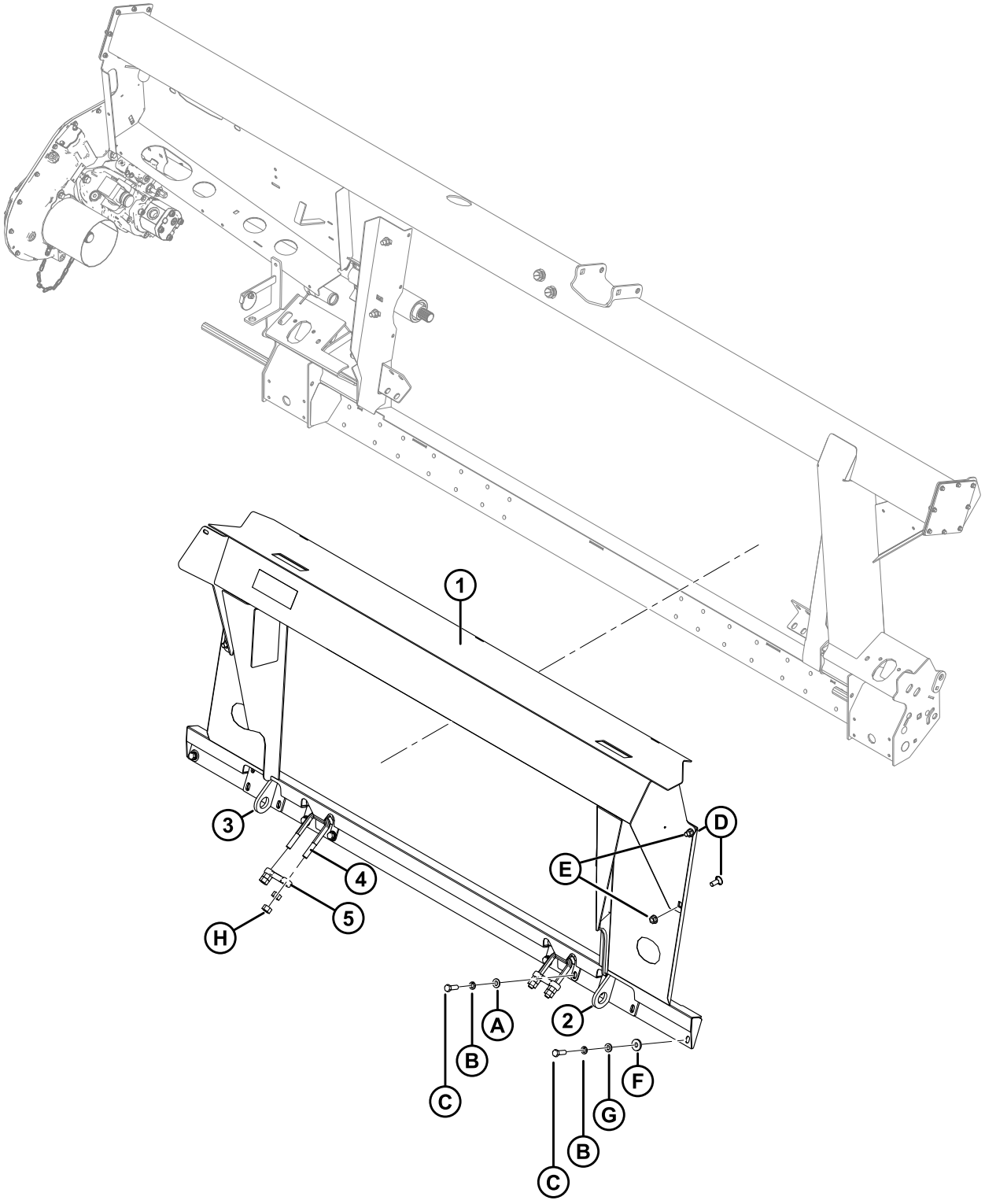

1004959

CASE 20 SERIES – ADAPTER COMPLETION

Ref	Part Number	Description	Qty	Serial Number
1	133262	FRAME – CASE 2388 COMPLETION	1	
2	133288	BRACKET – 2388 LOCK (RH)	1	
3	133257	BRACKET – 2388 LOCK (LH)	1	
4	133242	U-BOLT	2	
5	133241	LATCH – 2300 SERIES COMBINE	2	
A	18599	WASHER – SAE FLAT 17/32 I.D. X 1-1/16 IN. O.D. ZP		
B	18638	WASHER – REG. LOCK 1/2 IN. NOM. I.D. ZP		
C	18723	BOLT – HH 1/2 NC X 1.5 LG TFL GR 5 ZP		
D	21471	BOLT – RHSN 1/2 NC X 1.25 GR 5 ZP		
E	50186	NUT – FLG LOC SM FACE DT 0.500-13 UNC GR 5		
F	4761	WASHER – FLAT		
G	187518	WASHER – FLAT		
H	18592	NUT – HEX 5/8-11 UNC GR 5 ZP		

NOTE:
(MD #B5668) – CIH 2300/2500 COMPLETION PACKAGE includes Adapter, Hydraulic, and Electrical Completion Packages to complete a stand-alone CA25 or to convert an existing factory installed CA25. Kits available through Whole Goods only.

26 Case IH and New Holland CR/CX – Adapter Completion

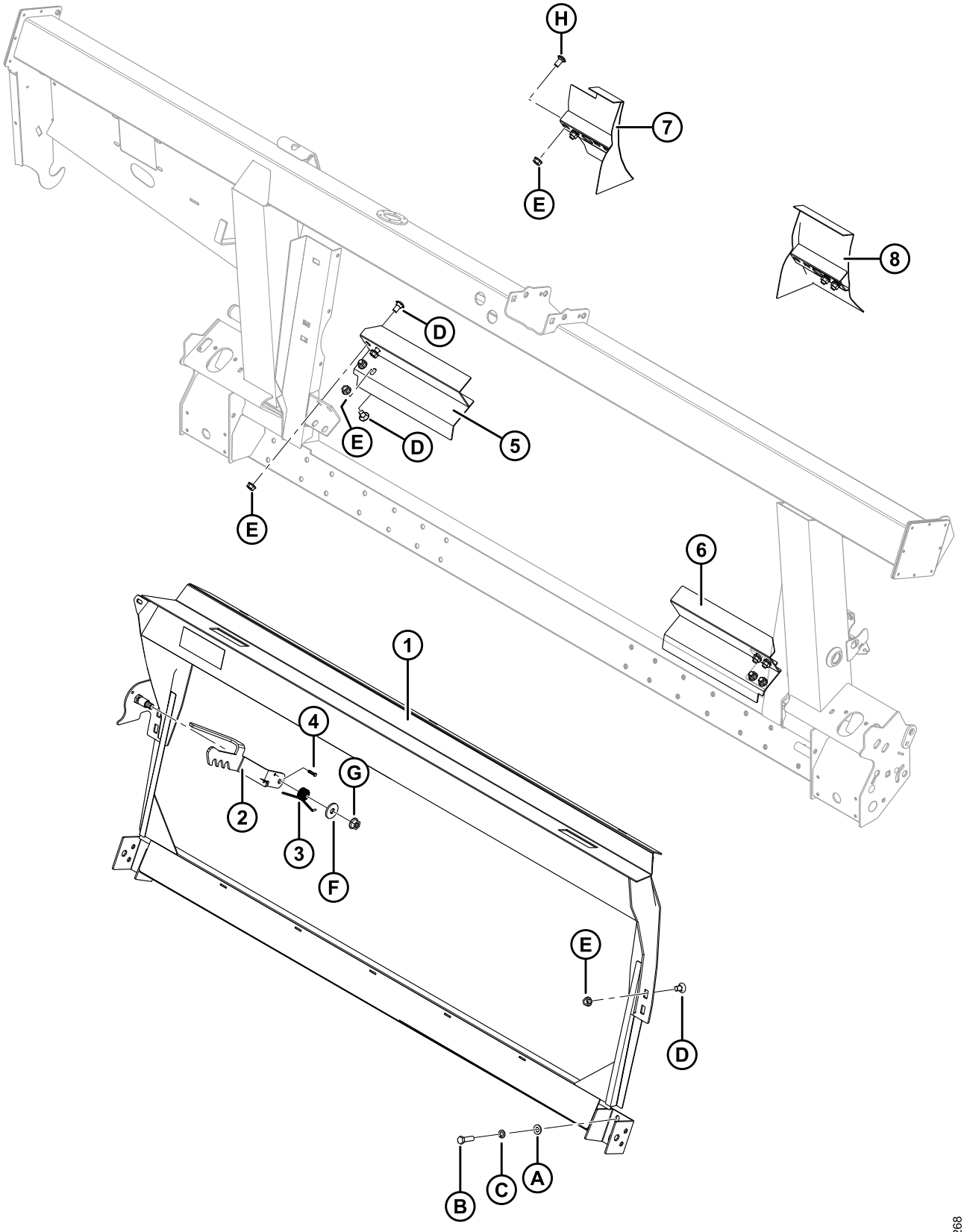

CASE IH AND NEW HOLLAND CR/CX – ADAPTER COMPLETION

Ref	Part Number	Description	Qty	Serial Number
1	**279493**	**FRAME – CNH TRANSITION**	**1**	
2	187006	LATCH – WELDT	1	
3	156948	SPRING – TORSION	1	
4	135655	PIN – CLEVIS	1	
5	133344	STRIPPER BAR – NEW HOLLAND CR970/980 ONLY (LH)	1	
6	133345	STRIPPER BAR – NEW HOLLAND CR970/980 ONLY (RH)	1	
7	**187415**	**DEFLECTOR – WELDT, LH SHORT**	**1**	
	187390	**DEFLECTOR – WELDT, LH (NOT ILLUSTRATED)**	**1**	
8	**187416**	**DEFLECTOR – WELDT, RH SHORT**	**1**	
	187391	**DEFLECTOR – WELDT, RH (NOT ILLUSTRATED)**	**1**	
A	18599	WASHER – SAE FLAT 17/32 I.D. X 1-1/16 IN. O.D. ZP		
B	50072	BOLT – HH 1/2 NC X 1.75 TFL GR 5 ZP		
C	18638	WASHER – REG LOCK 1/2 IN. NOM. I.D. ZP		
D	21066	BOLT – RHSN 1/2 NC X 1 GR 5 ZP		
E	50186	NUT – FLANGE LOCK SM FACE DT 0.500-13 UNC GR 5		
F	23745	WASHER – FLAT		
G	50225	NUT – FLANGE DT SMOOTH FACE .625-11 UNC		
H	**21868**	**BOLT – RHSN 1/2 NC X 1.0 GR 5 ZP**		

NOTE:
(MD #B5667) – CIH 70/8010, 71/81/9120, 72/82/9230 50/60/7088 COMPLETION PACKAGE, (MD #B5762) – NEW HOLLAND CR/CX COMPLETION PACKAGE includes Adapter, Hydraulic, and Electrical Completion Packages to complete a stand-alone CA25 or to convert an existing factory installed CA25. Kits available through Whole Goods only.

27 Case 20 Series – Hydraulic Completion

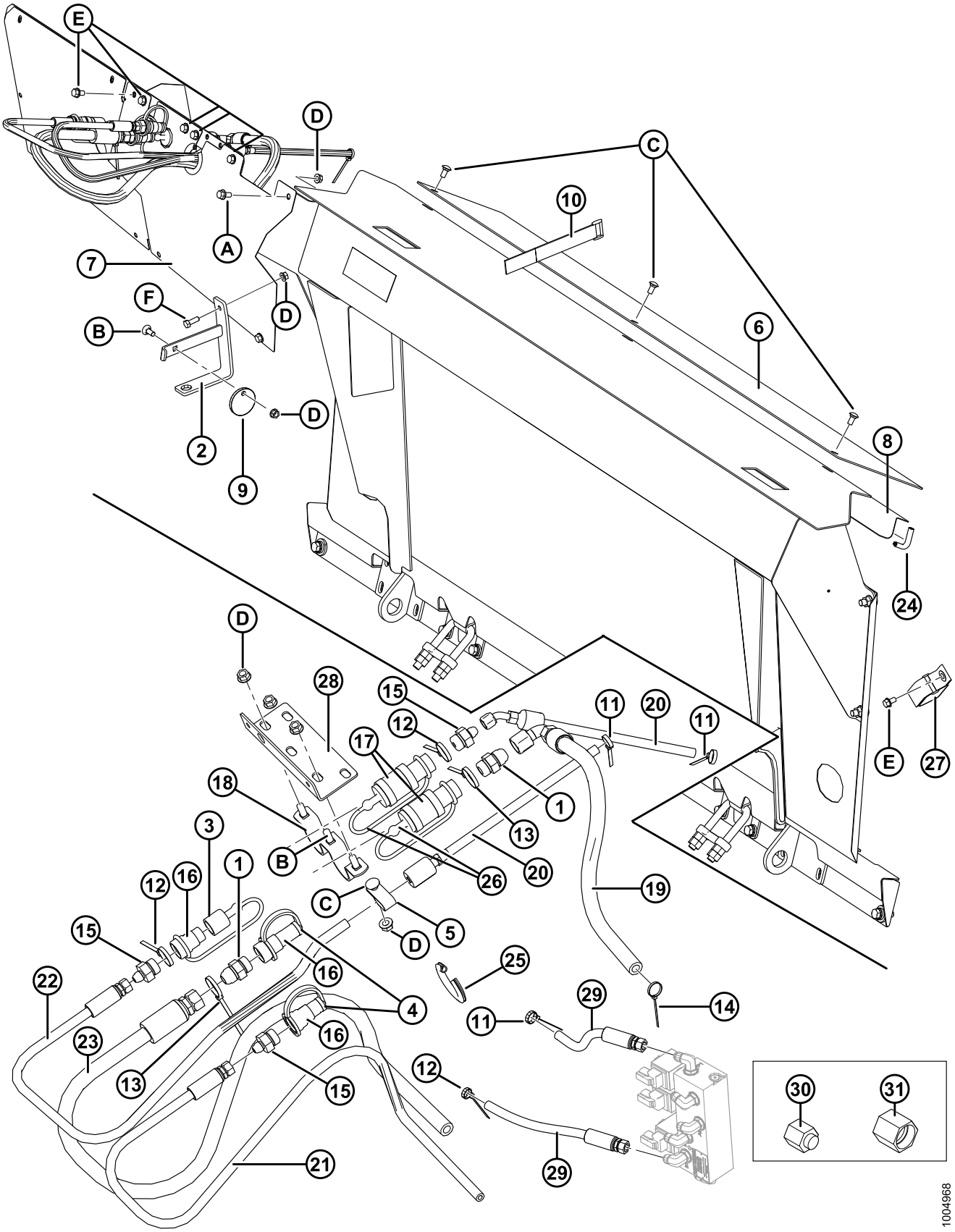

Ref	Part Number	Description	Qty	Serial Number
1	30695	FITTING – CONNECTOR HYDRAULIC	2	
2	133166	BRACKET – DRIVELINE HANGER WELDT	1	
3	114230	CAP	1	
4	21856	CAP – DUST	2	
5	**252559**	**CLAMP – INSULATED**	**1**	
6	187723	COVER – TOP FEED AUGER	1	
7	133280	COVER – COUPLERS	1	
8	156725	COVER – HOSE	1	
9	133165	DISC-LOCK – DRIVELINE	1	
10	135444	FASTENER – CINCH STRAP 6 IN. LG	6	
11	49227	FASTENER – CABLE TIE (GREEN)	3	
12	40702	FASTENER – CABLE TIE (RED)	3	
13	49232	FASTENER – CABLE TIE (WHITE)	2	
14	40701	FASTENER – CABLE TIE (YELLOW)	1	
15	114141	FITTING – CONNECTOR HYDRAULIC	3	
16	114142	FITTING – COUPLING HYDRAULIC	3	
17	114143	FITTING – COUPLING HYDRAULIC	2	
18	114140	HOLDER	1	
19	156758	HOSE – HYDRAULIC 1/2 IN. I.D. 4330 MM LG 100R17	1	
20	133261	HOSE – HYD 1/4 IN. I.D. 4330 MM LG 100R17, METAL REIN.	2	
21	156909	HOSE – HYDRAULIC 1/4 IN. I.D. 5530 MM LG 100R17	1	
22	156935	HOSE – HYDRAULIC 1/4 IN. I.D. 1200 MM LG 100R17	1	
23	156938	HOSE – HYDRAULIC 1/2 IN. I.D. 5530 MM LG 100R17	1	
24	42589	MOULDING	2	
25	109791	MOULDING	1	
26	114229	PLUG	2	
27	163598	STRAP – VELCRO, HANGING	1	
28	156606	SUPPORT – HYDRAULIC COUPLER	1	
29	133260	HOSE – HYD 1/4 IN. I.D., 470 MM LG, 100R17, METAL REIN.	2	
30	30813	CAP – 3/8 IN. TUBE 37° FLARE (FOR SHIPPING ONLY)	1	
31	108233	CAP – 1/2 IN. TUBE (FOR SHIPPING ONLY)	1	

NOTE:
(MD #B5668) – CIH 2300/2500 COMPLETION PACKAGE includes Adapter, Hydraulic, and Electrical Completion Packages to complete a stand-alone CA25 or to convert an existing factory installed CA25. Kits available through Whole Goods only

CASE 20 SERIES – HYDRAULIC COMPLETION

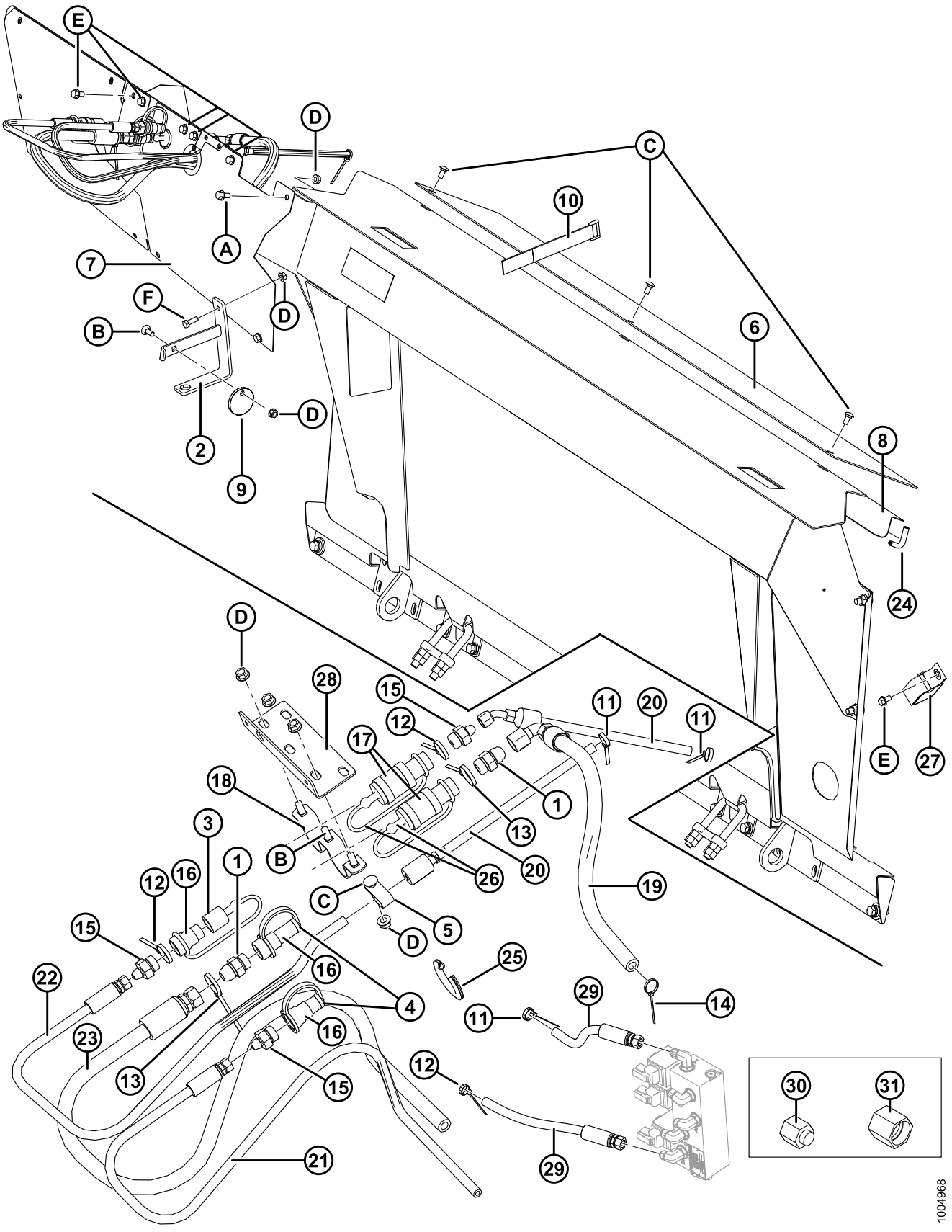

Ref	Part Number	Description	Qty	Serial Number
A	21821	BOLT – HH FLG (SER FACE) 3/8 NC X 0.75 GR 5 ZP		
B	19965	BOLT – RHSN 3/8 NC X 1.0 GR 5 ZP		
C	21863	BOLT – RHSSN 3/8 NC X 0.75 LG GR 5 ZP		
D	30228	NUT – FLANGE DT SMOOTH FACE 0.375-16 UNC		
E	101898	SCREW – SELF TAPPING 3/8 NC X 5/8 LG		
F	20077	BOLT – HEX HD 3/8 NC X 1.0 LG GR 5 ZP		

NOTE:
(MD #B5668) – CIH 2300/2500 COMPLETION PACKAGE includes Adapter, Hydraulic, and Electrical Completion Packages to complete a stand-alone CA25 or to convert an existing factory installed CA25. Kits available through Whole Goods only

28 Case IH and New Holland CR/CX – Hydraulic Completion

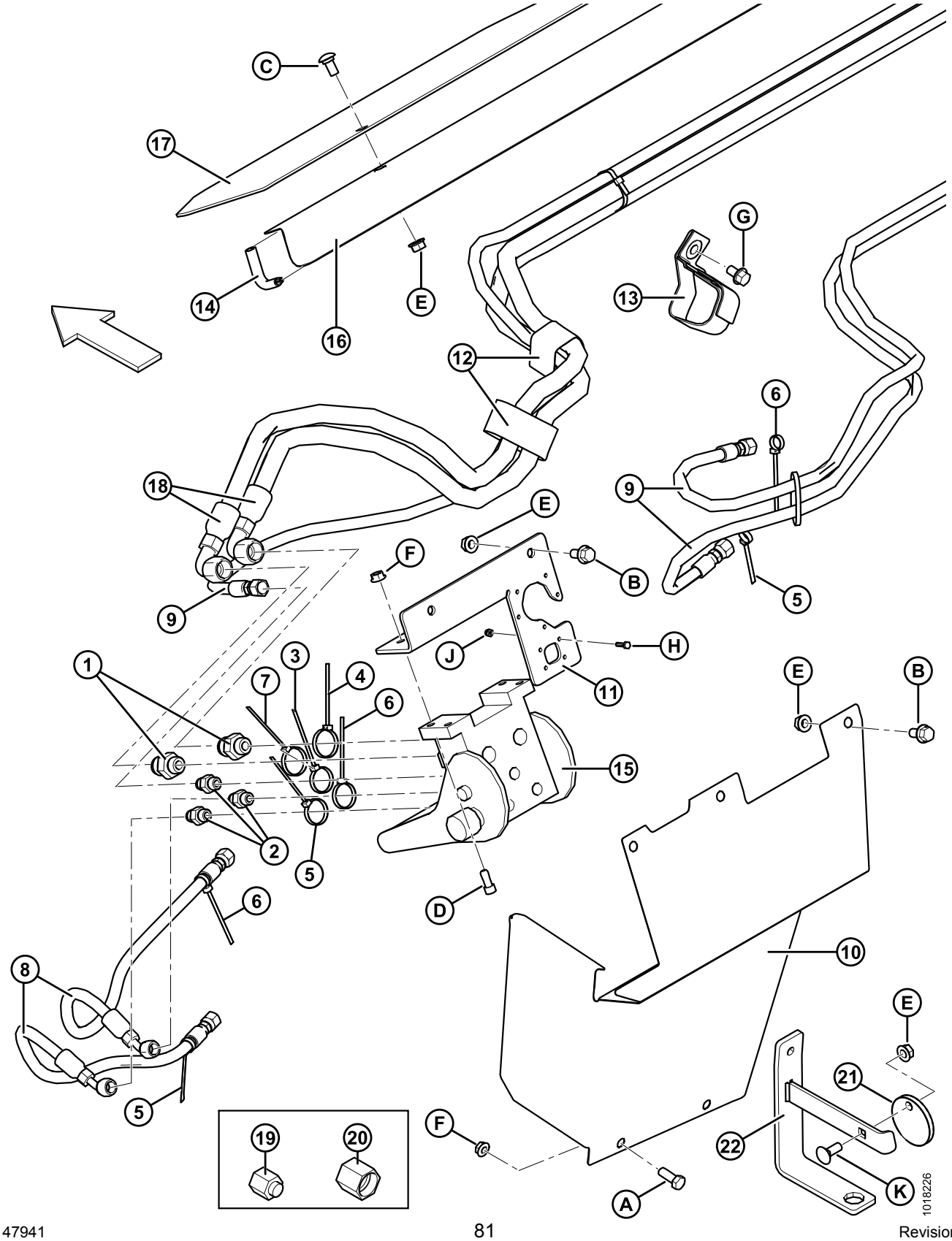

Ref	Part Number	Description	Qty	Serial Number
1	21747	FITTING – CONNECTOR HYDRAULIC	2	
2	158587	FITTING – CONN HYD 0.052 IN. ORIFICE	3	
3	21763	FASTENER – CABLE TIE (BLACK)	**3**	
4	40701	FASTENER – CABLE TIE (YELLOW)	**3**	
5	40702	FASTENER – CABLE TIE (RED)	**3**	
6	49227	FASTENER – CABLE TIE (GREEN)	**3**	
7	49232	FASTENER – CABLE TIE (WHITE)	**2**	
8	133260	HOSE – HYD **470 MM TO SELECTOR VALVE PORTS P1, P2**	2	
9	156759	HOSE – HYDRAULIC 1/4 IN. I.D. 4330 MM LG 100R17	3	
10	220656	COVER – COUPLERS	1	
11	220654	SUPPORT – HYD COUPLER, MACHINING AND FORMING	1	
12	135444	FASTENER – CINCH STRAP 6 IN. LG	**10**	
13	163598	STRAP – VELCRO, HANGING	1	
14	42589	MOULDING	2	
15	153151	COUPLING – MULTI	1	
	129800	COVER – KIT		
	129801	LATCH – BUTTON KIT		
	129976	COUPLING – 1/4 IN.		
	129977	COUPLING – 3/8 IN.		
16	156725	COVER – HOSE	1	
17	187723	COVER – TOP FEED AUGER	1	
18	156758	HOSE – HYDRAULIC 1/2 IN. I.D. 4330 MM LG 100R17	2	
19	30813	CAP – 3/8 IN. TUBE 37° FLARE (FOR SHIPPING ONLY)	1	
20	108233	CAP – 1/2 IN. TUBE (FOR SHIPPING ONLY)	1	
21	**133165**	**DISC – LOCK, DRIVELINE HANGER**	**1**	
22	**133166**	**BRACKET – DRIVELINE HANGER WELDT**	**1**	

NOTE:
(MD #B5667) – CIH 70/8010, 71/81/9120, 72/82/9230 50/60/7088 COMPLETION PACKAGE, (MD #B5762) – NEW HOLLAND CR/CX COMPLETION PACKAGE includes Adapter, Hydraulic, and Electrical Completion Packages to complete a stand-alone CA25 or to convert an existing factory installed CA25. Kits available through Whole Goods only.

CASE IH AND NEW HOLLAND CR/CX – HYDRAULIC COMPLETION

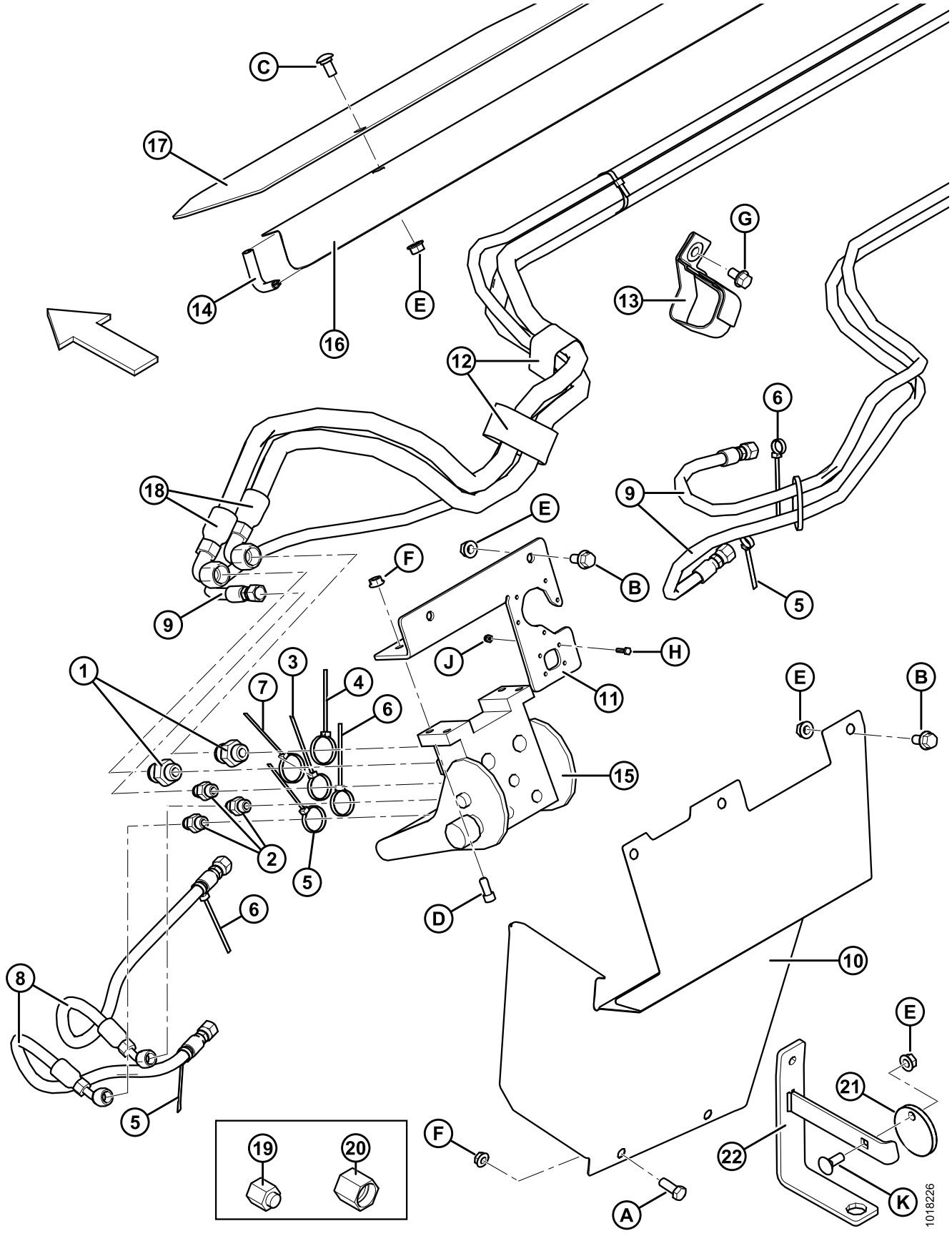

Ref	Part Number	Description	Qty	Serial Number
A	20077	BOLT – HEX HD 3/8 NC X 1.0 TFL GR 5 BLK		
B	21821	BOLT – HH FLG (SER FACE) 3/8 NC X 0.75 GR 5 ZP		
C	21863	BOLT – RHSSN 3/8 NC X 0.75 LG GR 5 ZP		
D	135397	BOLT – SOCKET HD HEX 5/16 NC X 3/4		
E	30228	NUT – FLANGE DT SMOOTH FACE 0.375-16 UNC		
F	30280	NUT – FL PREV-TOR SIDE DT SM FACE 0.312-18 UNC GR 5		
G	101898	SCREW – SELF TAPPING 3/8 NC X 5/8 LG		
H	**197319**	**BOLT – HEX HD TFL M4 X 0.7 X 16-8.8-A2L**		
J	**197320**	**NUT – HEX NYLOC M4 X 0.7-8-A2L**		
K	**19965**	**BOLT – RHSN 3/8 NC X 1.0 GR 5 ZP**		

NOTE:
(MD #B5667) – CIH 70/8010, 71/81/9120, 72/82/9230 50/60/7088 COMPLETION PACKAGE, (MD #B5762) – NEW HOLLAND CR/CX COMPLETION PACKAGE includes Adapter, Hydraulic, and Electrical Completion Packages to complete a stand-alone CA25 or to convert an existing factory installed CA25. Kits available through Whole Goods only.

29 Case IH/20 Series and New Holland CR/CX – Electrical Completion

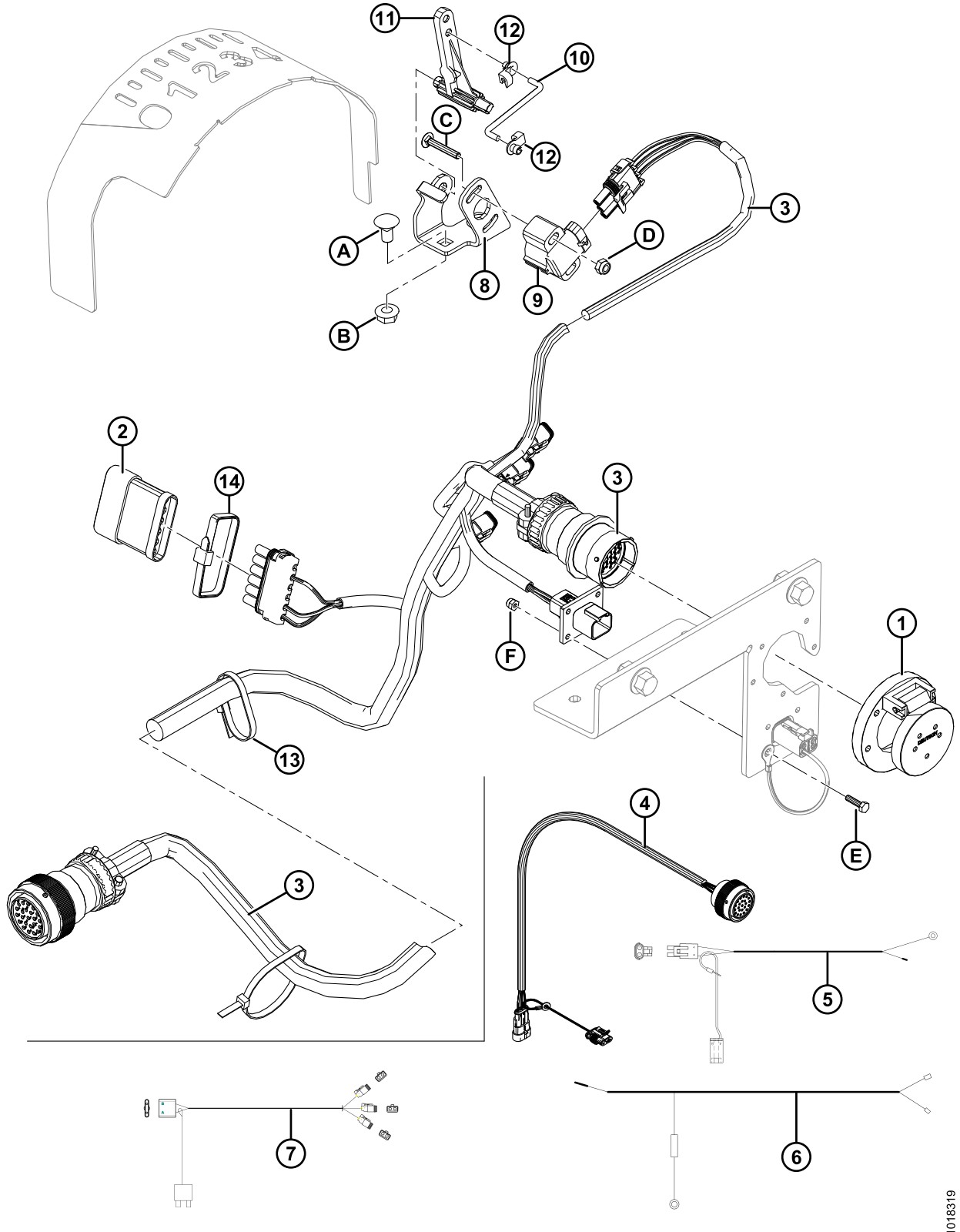

Ref	Part Number	Description	Qty	Serial Number
1	133277	COVER – ELECTRICAL	1	
2	153933	RESISTOR – HEADER RECOGNITION	1	
3	220328	HARNESS – WIRING (CNH)	1	
	133133	HARNESS – WIRING (CASE 20 SERIES ONLY)	1	
4	156612	HARNESS – WIRING (CASE 20 SERIES ONLY)	1	
5	153989	HARNESS – WIRING, HEADER CONNECTER POINT TO CAB (CASE 20 SERIES ONLY)	1	
6	153990	HARNESS – WIRING, FORE-AFT/DECK TILT CAB INTERIOR (CASE 20 SERIES ONLY)	1	
7	129566	HARNESS – WIRING, REEL FORE-AFT/HEADER TILT VALVE (CASE 20 SERIES ONLY)	1	
8	187670	SUPPORT – SENSOR MOUNT (CNH / JD / AGCO)	1	
9	158069	CONTROL – POTENTIOMETER	1	
10	158633	ROD – LINKAGE	1	
11	187193	ARM – SENSOR CONTROL	1	
12	153492	CLIP – ROD END	2	
13	21763	FASTENER – CABLE TIE (BLACK)	3	
14	30753	FASTENER – CABLE TIE	1	
A	135305	BOLT – RHSN 5/16 NC X 0.63 GR 5 ZP		
B	30280	NUT – FLG SIDE LK SMTH FACE 5/16 NC GR 5 ZP		
C	136018	BOLT – RD HD, SQ NECK, #10-24 NC X 1.25 IN. LG		
D	105197	NUT – HEX LOCK .187-24 UNC		
E	**197319**	**BOLT – HEX HD TFL M4 X 0.7 X 16-8.8-A2L**		
F	**197320**	**NUT – HEX NYLOC M4 X 0.7-8-A2L**		

NOTE:
(MD #B5667) – CIH 70/8010, 71/81/9120, 72/82/9230 50/60/7088 COMPLETION PACKAGE, (MD #B5762) – NEW HOLLAND CR/CX COMPLETION PACKAGE, (MD #B5668) – CIH 2300/2500 COMPLETION PACKAGE includes Adapter, Hydraulic, and Electrical Completion Packages to complete a stand-alone CA25 or to convert an existing factory installed CA25. Kits available through Whole Goods only.

30 New Holland 10 Volt Auto Header Height Sensor

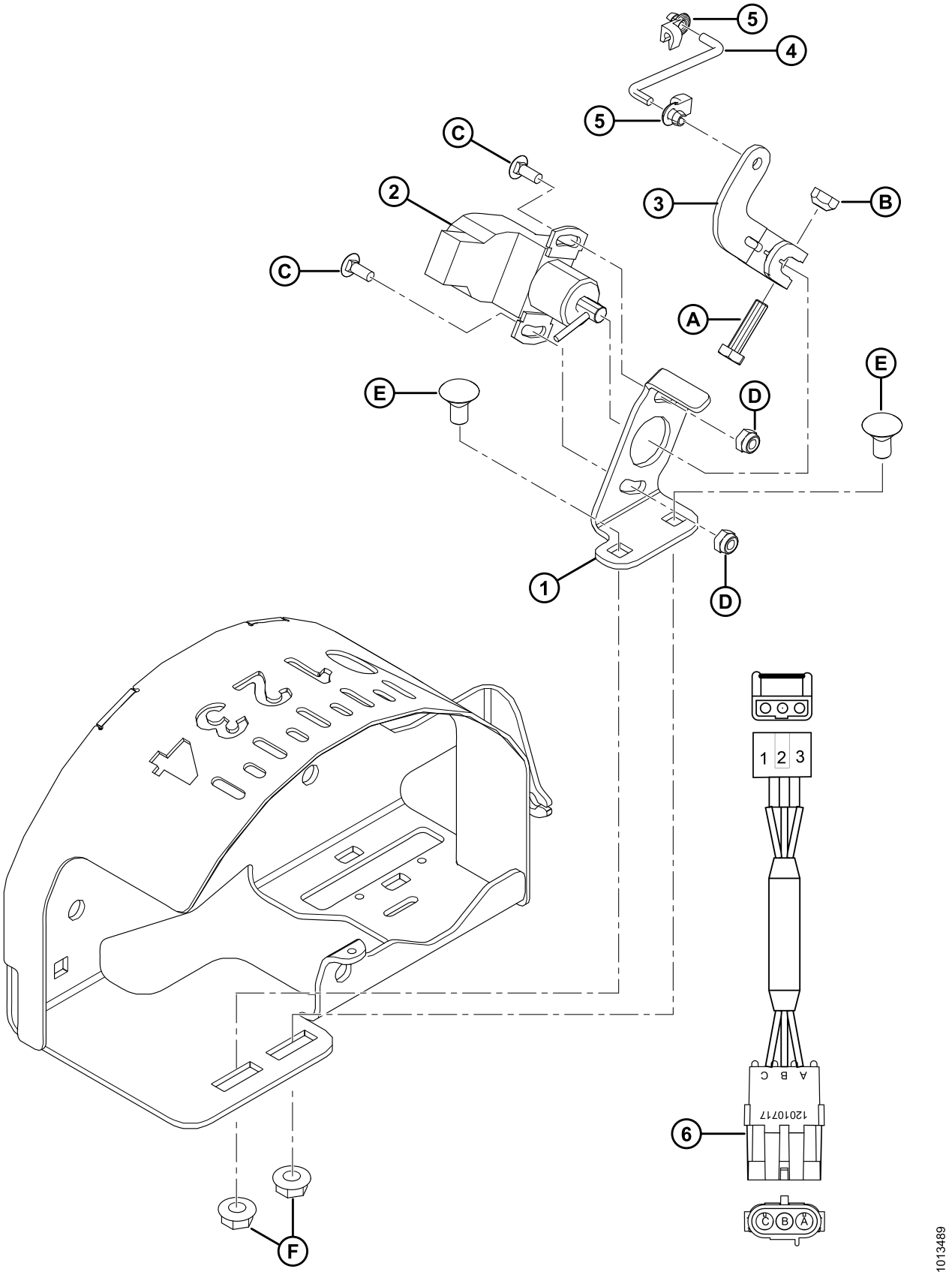

NEW HOLLAND 10 VOLT AUTO HEADER HEIGHT SENSOR

Ref	Part Number	Description	Qty	Serial Number
	B5847	KIT – NEW HOLLAND AHHC 10V SENSOR [41]		
1	187682	SUPPORT – SENSOR MOUNT NEW HOLLAND 10V	1	
2	153692	CONTROL – INDUCTIVE ANGLE SENSOR	1	
3	133158	ARM – LINKAGE (NH CR/CX)	1	
4	158633	ROD – LINKAGE	1	
5	153492	CLIP – ROD END	2	
6	191757	HARNESS – WIRING ADAPTER AHHC NH	1	
A	21573	BOLT – HEX HD 1/4 NC X 1.0 LG GR 5 ZP		
B	18724	NUT – HEX LOCK DT 1/4-20 UNC ZP		
C	30465	BOLT – RHSN, #10-24 NC X 0.5 IN.		
D	105197	NUT – HEX LOCK 187-24 UNC		
E	135305	BOLT – RHSN 5/16-18 X .63 GR 5 ZP		
F	30280	NUT – FLG SIDE LK SMTH FACE 5/16 NC GR 5 ZP		

NOTE:
This kit assumes that the New Holland CR/CX Completion Package (B5762) has already been installed on the adapter (installation may have been done in the factory). This completion package is required for all CA25 Combine Adapters used with New Holland 10 volt combines.

41. Kits available through Whole Goods only.

31 John Deere 50/60/70 Series – Adapter Completion

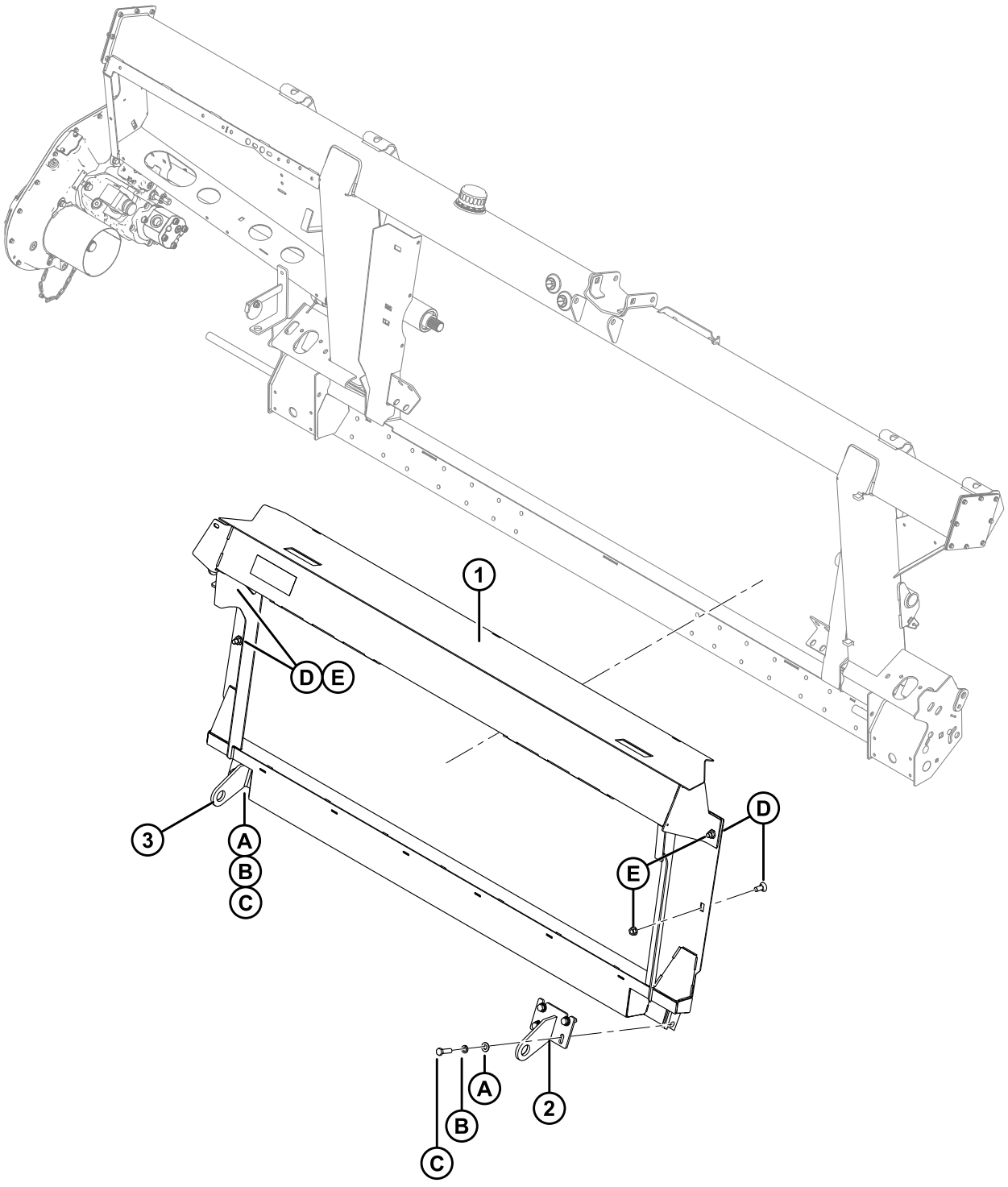

1004957

JOHN DEERE 50/60/70 SERIES – ADAPTER COMPLETION

Ref	Part Number	Description	Qty	Serial Number
1	**220628**	**FRAME – JD WELDT LEVEL LAND**	**1**	
2	151942	BRACKET – RIGHT WELDT	1	
3	151941	BRACKET – LEFT WELDT	1	
A	18599	WASHER – SAE FLAT 17/32 I.D. X 1-1/16 IN. O.D. ZP		
B	18638	WASHER – REG LOCK 1/2 IN. NOM I.D. ZP		
C	50072	BOLT – HH 1/2 NC X 1.75 TFL GR 5 ZP		
D	21471	BOLT – RHSN 1/2 NC X 1.25 GR 5 ZP		
E	50186	NUT – FLG LOC SM FACE DT 0.500-13 UNC GR 5		

NOTE:
(MD #B5670) – JD 50 SERIES COMPLETION PACKAGE, (MD #B5669) – JD 60/70 SERIES COMPLETION PACKAGE **(2016–PRIOR)**, **(MD #B6202) – JD 60/70 SERIES COMPLETION PACKAGE (2017–FORWARD)** includes Adapter, Hydraulic, and Electrical Completion Packages to complete a stand-alone CA25 or to convert an existing factory installed CA25. Kits available through Whole Goods only.

32 John Deere – Contour Master Transition Frame

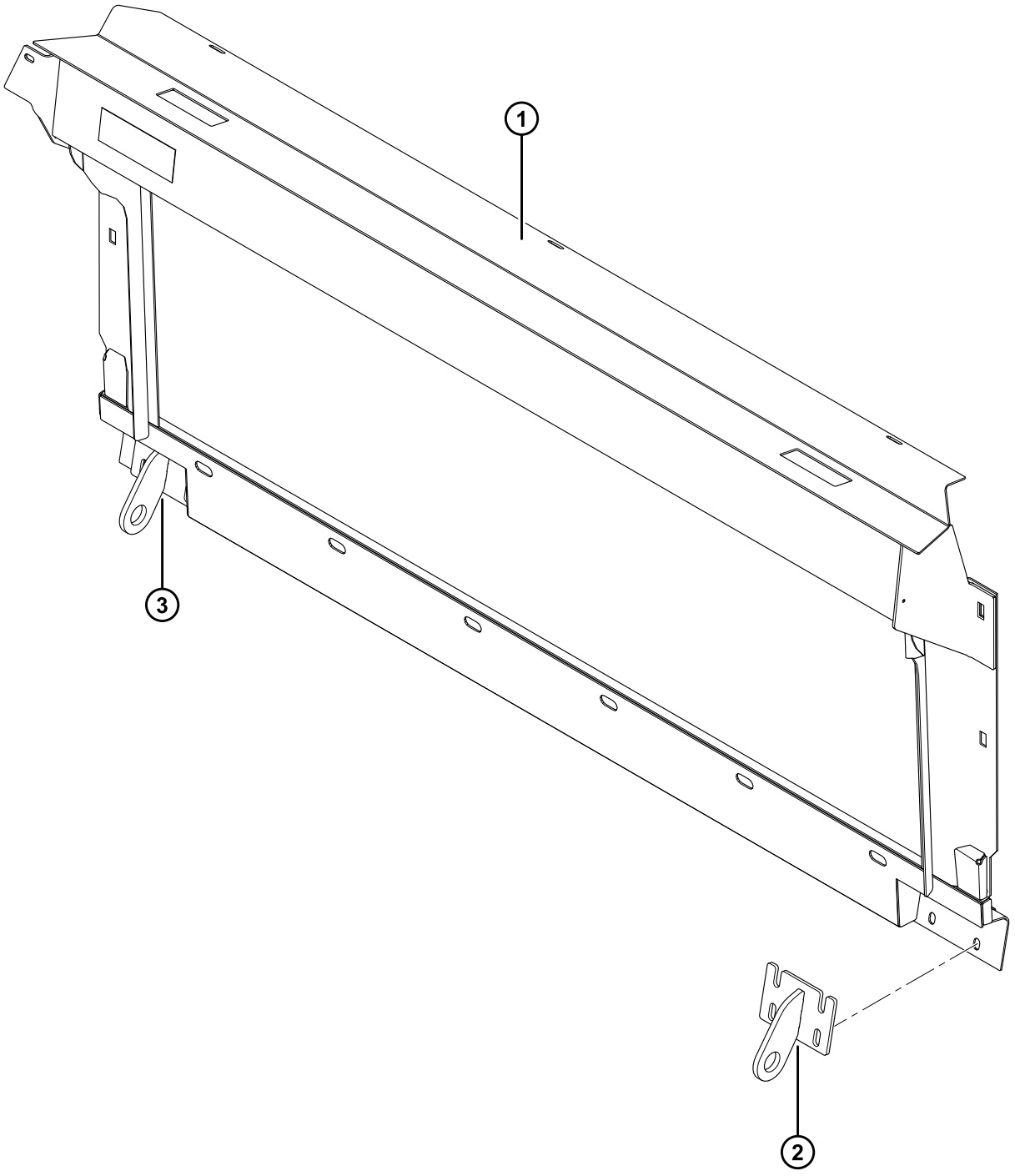

1018303

JOHN DEERE – CONTOUR MASTER TRANSITION FRAME

Ref	Part Number	Description	Qty	Serial Number
1	**279252**	**FRAME – JOHN DEERE CONTOUR MASTER WELDMENT**	**1**	
2	245761	BRACKET – WELDT JD CONT MASTER (RIGHT)	1	
3	245760	BRACKET – WELDT JD CONT MASTER (LEFT)	1	

NOTE:
(MD #B5883) – John Deere Contour Master Transition Frame **(2016–Prior)**, **(MD #B6206) – John Deere Contour Master Transition Frame (2017–Forward)**: Sold as a performance option only. For production line units (parts), refer to Section *31 John Deere 50/60/70 Series – Adapter Completion, page 89*.

33 John Deere 50 Series – Hydraulic Completion

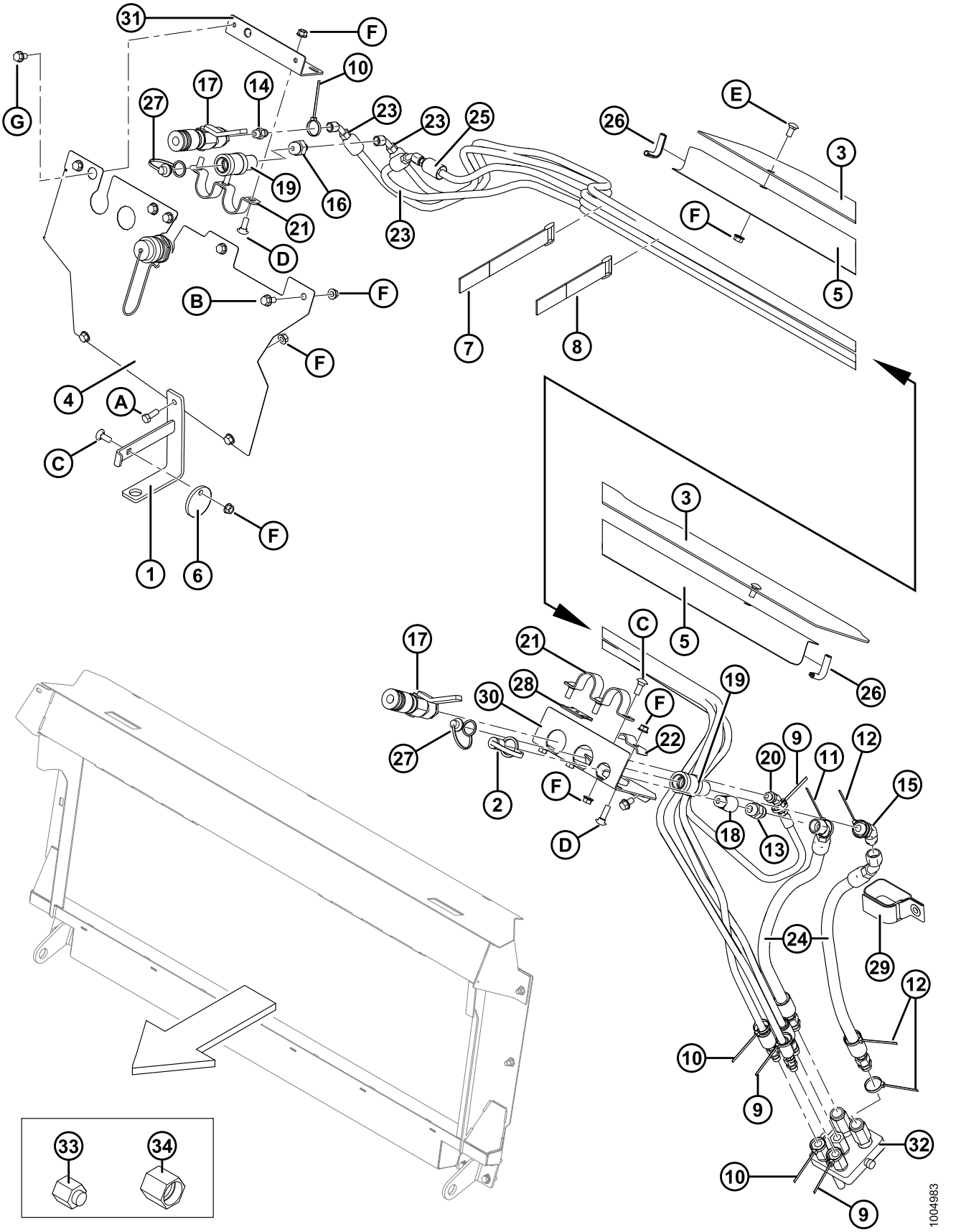

Ref	Part Number	Description	Qty	Serial Number
1	133166	BRACKET – DRIVELINE HANGER WELDT	1	
2	21856	CAP – DUST	1	
3	187723	COVER – TOP FEED AUGER	1	
4	133280	COVER – COUPLERS	1	
5	156725	COVER – HOSE	1	
6	133165	DISC – LOCK, DRIVELINE	1	
7	135444	FASTENER – CINCH STRAP 6 IN. LG	3	
8	135443	FASTENER – CINCH STRAP 4 IN. LG	3	
9	49227	FASTENER – CABLE TIE (GREEN)	3	
10	40702	FASTENER – CABLE TIE (RED)	3	
11	49232	FASTENER – CABLE TIE (WHITE)	1	
12	40701	FASTENER – CABLE TIE (YELLOW)	3	
13	30695	FITTING – CONNECTOR HYD STRGHT THRD SHORT SAE	1	
14	15903	FITTING – CONNECTOR HYD STRGHT THRD SHORT SAE	1	
15	50103	FITTING – ELBOW 45° HYD C/W O-RING	1	
16	114141	FITTING – CONNECTOR HYD STRGHT THRD SHORT SAE	1	
17	114120	FITTING – COUPLING HYD NON ALLOY STEEL, FEMALE JOHN DEERE FORE AFT WITH LEVER SHUT OFF	2	
18	114142	FITTING – COUPLING HYD MALE CASE	1	
19	114143	FITTING – COUPLING HYD NONALLOY STEEL	2	
20	30284	FITTING – ELBOW 45° HYD C/W O-RING	1	
21	114140	HOLDER	2	
22	29934	HOLDER	1	
23	133261	HOSE – HYD 1/4 IN. I.D. 4330 MM LG, 100R17, METAL REIN.	3	
24	156940	HOSE – HYD 1/2 IN. I.D. 1200 MM LG 100R17, METAL REIN.	2	
25	133730	HOSE – HYD 1/4 IN. I.D. 3430 MM LG 100R17, METAL REIN.	1	

NOTE:
(MD #B5670) – JD 50 SERIES COMPLETION PACKAGE includes Adapter, Hydraulic, and Electrical Completion Packages to complete a stand-alone CA25 or to convert an existing factory installed CA25. Kits available through Whole Goods only.

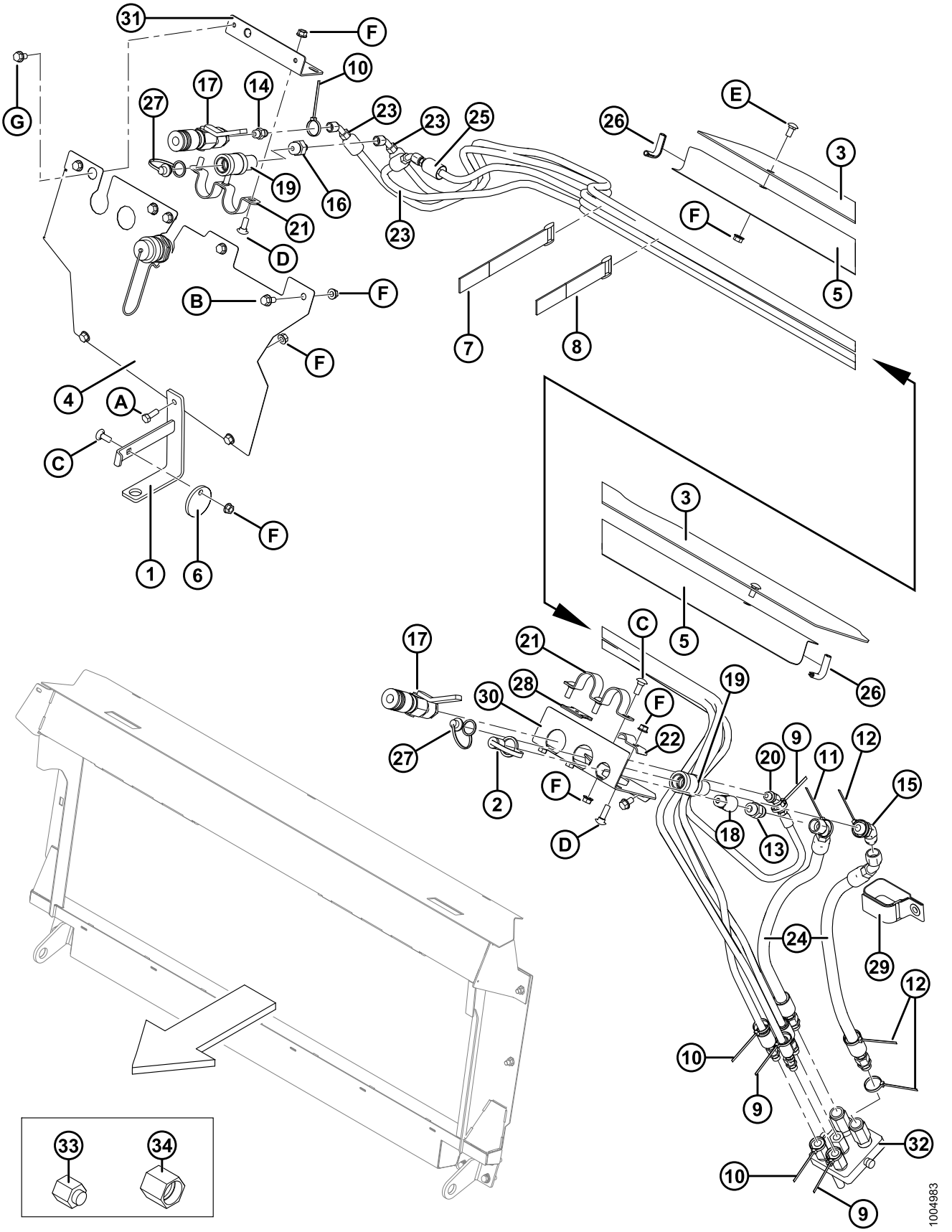
31
F
10
G
17
14
27
23
23
25
26
E
3
19
16
F
21
23
5
D
B
F
7
8
F
4
A
C
1
6
F
3
5
C
17
21
19
26
30
28
F
22
27
2
F
D
9
12
20
11
15
18
13
24
29
12
10
9
32
10
9
1004983
33
34

Ref	Part Number	Description	Qty	Serial Number
26	42589	MOULDING	2	
27	21858	PLUG – DUST	2	
28	158253	SPACER – COUPLER MTG	2	
29	163598	STRAP – VELCRO, HANGING	1	
30	156967	SUPPORT – RH HYD COUPLER	1	
31	156606	SUPPORT – HYD COUPLER	1	
32	135238	COUPLING – MULTI LINK	1	
	111981	SEAL KIT – 1/4 IN. COUPLER	3	
	111982	SEAL KIT – 3/8 IN. COUPLER	2	
	111983	KIT – SCREW	1	
	111984	KIT – DOWEL	1	
	111985	COUPLER – 3/8 IN. (LONG)	1	
	111986	COUPLER – 1/4 IN.	3	
	111987	COUPLER – 3/8 IN. (SHORT)	1	
33	30813	CAP – 3/8 IN. TUBE 37° FLARE (FOR SHIPPING ONLY)	1	
34	108233	CAP – 1/2 IN. TUBE (FOR SHIPPING ONLY)	1	
A	20077	BOLT – HEX HD 3/8 NC X 1.0 LG GR 5 ZP		
B	21821	BOLT – HH FLG (SER FACE) 3/8 NC X 0.75 GR 5 ZP		
C	19965	BOLT – RHSN 3/8 NC X 1.0 GR 5 ZP		
D	19966	BOLT – RHSN 3/8 NC X 1.25 LG GR 5 ZP		
E	21863	BOLT – RHSSN 3/8 NC X 0.75 LG GR 5 ZP		
F	30228	NUT – FLANGE DT SMOOTH FACE 0.375-16 UNC		
G	101898	SCREW – SELF TAPPING 3/8 NC X 5/8 LG		

NOTE:
(MD #B5670) – JD 50 SERIES COMPLETION PACKAGE includes Adapter, Hydraulic, and Electrical Completion Packages to complete a stand-alone CA25 or to convert an existing factory installed CA25. Kits available through Whole Goods only.

34 John Deere 60/70 Series – Hydraulic Completion, 2016 and Prior

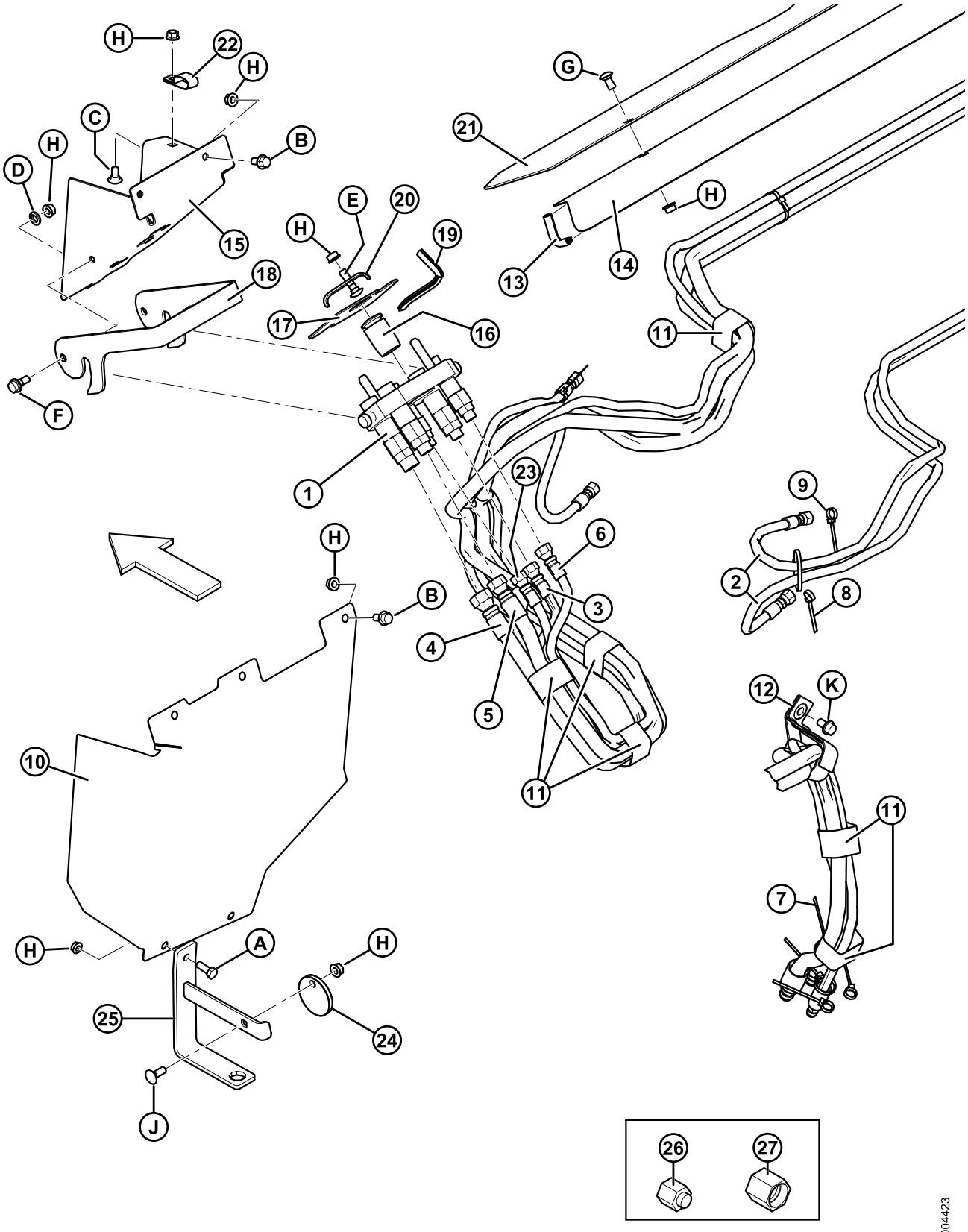

Ref	Part Number	Description	Qty	Serial Number
1	**245820**	**COUPLING – MULTI JOHN DEERE (PARKER)** [42]	**OPT**	
	129120	COUPLING – MULTI JOHN DEERE **(FASTER)**	1	
	279011	**KIT – COUPLER 3/8 C/W 3/8 IN. FITTING**	**2**	
	279012	**KIT – COUPLER 9/16 C/W 5/8 IN. FITTING**	**1**	
	279013	**KIT – COUPLER 9/16 C/W 1/2 IN. FITTING**	**1**	
	279014	**KIT – COUPLER 9/16 C/W 3/8 IN. FITTING**	**1**	
	279034	**SEAL – SHAPED, 3/8 IN.**	**2**	
	279035	**SEAL – SHAPED, 9/16 IN.**	**3**	
2	156759	HOSE – HYDRAULIC 1/4 IN. I.D. 4330 MM LG 100R17	2	
3	156910	HOSE – HYDRAULIC 1/4 IN. I.D. 5530 MM LG 100R17	1	
4	156939	HOSE – HYDRAULIC 1/2 IN. I.D. 5530 MM LG 100R17	1	
5	156970	HOSE – HYD 1/2 IN. I.D. 5530 MM LG 100R17, METAL REIN.	1	
6	220657	HOSE – HYDRAULIC 1/4 IN. I.D. 1450 MM LG 100R17	1	
7	40701	FASTENER – CABLE TIE (YELLOW)	1	
8	40702	FASTENER – CABLE TIE (RED)	3	
9	49227	FASTENER – CABLE TIE (GREEN)	3	
10	133268	COVER – COUPLERS	1	
11	135444	FASTENER – CINCH STRAP 6 IN. LG	10	
12	163598	STRAP – VELCRO, HANGING	1	
13	42589	MOULDING	2	
14	156725	COVER – HOSE	1	
15	133270	BRACKET – COUPLER (JD 60)	1	
16	129148	PLUG – RUBBER	1	
17	129149	PAD – RUBBER	1	
18	129143	LATCH – COUPLER BRACKET	1	
19	109791	MOULDING	1	
20	103351	HOLDER	1	
21	187723	COVER – TOP FEED AUGER	1	

NOTE:
(MD #B5669) – JD 60/70 SERIES COMPLETION PACKAGE **(2016–PRIOR)** includes Adapter, Hydraulic, and Electrical Completion Packages to complete a stand-alone CA25 or to convert an existing factory installed CA25. Kits available through Whole Goods only.

42. Parker coupling (MD #245820) is interchangeable with Faster coupling (MD #129120) as a complete assembly only (coupling service parts are not interchangeable). Parker coupling includes two bushings (MD #182181), plate (MD #182182), three couplers (MD #184460), two couplers (MD #191704), fittings (MD #184461, 184462, 184463), two fittings (MD #191705), seal kits (MD #129859, 129860), and two bolts (MD #184524).

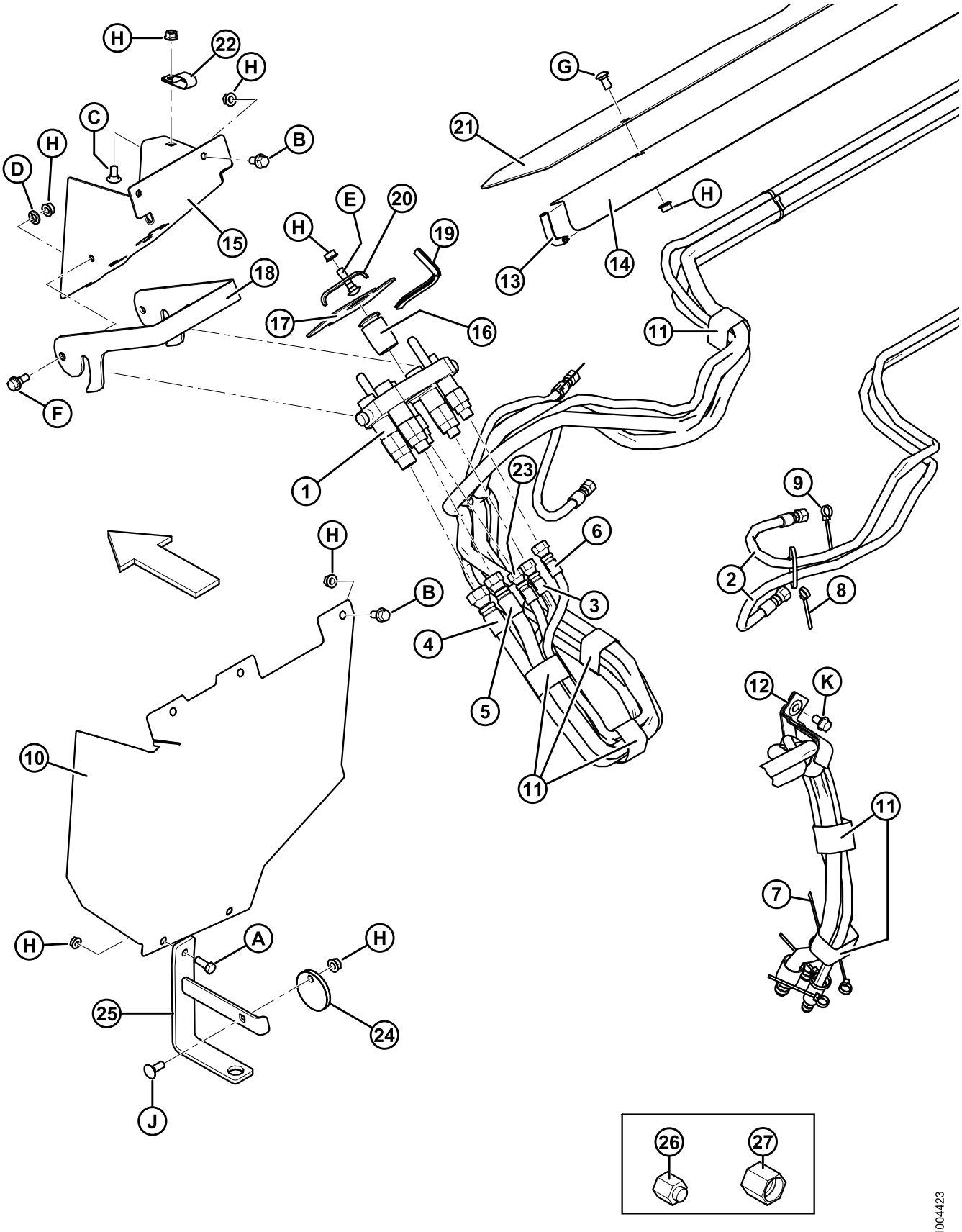
H
22
H
C
B
D
H
15
E
20
H
19
18
17
16
G
21
H
13
14
11
F
1
23
9
6
2
8
H
B
3
4
5
12
K
11
10
11
7
H
A
H
25
24
J
26
27
1004423

Ref	Part Number	Description	Qty	Serial Number
22	135234	CLAMP – DOUBLE HOSE INSULATED	1	
23	220658	HOSE – HYDRAULIC 1/4 IN. I.D. 1650 MM LG 100R17	1	
24	133165	DISC – LOCK, DRIVELINE	1	
25	133166	BRACKET – DRIVELINE HANGER WELDT	1	
26	30813	CAP – 3/8 IN. TUBE 37° FLARE (FOR SHIPPING ONLY)	1	
27	108233	CAP – 1/2 IN. TUBE (FOR SHIPPING ONLY)	1	
A	20077	BOLT – HEX HD 3/8 NC X 1.0 LG GR 5 ZP		
B	21821	BOLT – HH FLG (SER FACE) 3/8 NC X 0.75 GR 5 ZP		
C	21472	BOLT – RHSN 3/8 NC X 0.75 GR 5 ZP		
D	18652	WASHER – REG LOCK 7/16 IN. NOM. I.D. ZP		
E	21484	BOLT – RHSN 3/8 NC X 1.5 LG GR 5 ZP		
F	27647	BOLT – SHOULDER		
G	21863	BOLT – RHSSN 3/8 NC X 0.75 LG GR 5 ZP		
H	30228	NUT – FLANGE DT SMOOTH FACE 0.375-16 UNC		
J	19965	BOLT – RHSN 3/8 NC X 1.0 GR 5 ZP		
K	101898	SCREW – SELF TAPPING 3/8 NC X 5/8 LG		

NOTE:
(MD #B5669) – JD 60/70 SERIES COMPLETION PACKAGE **(2016–PRIOR)** includes Adapter, Hydraulic, and Electrical Completion Packages to complete a stand-alone CA25 or to convert an existing factory installed CA25. Kits available through Whole Goods only.

35 John Deere 60/70 Series – Hydraulic Completion, 2017 and Later

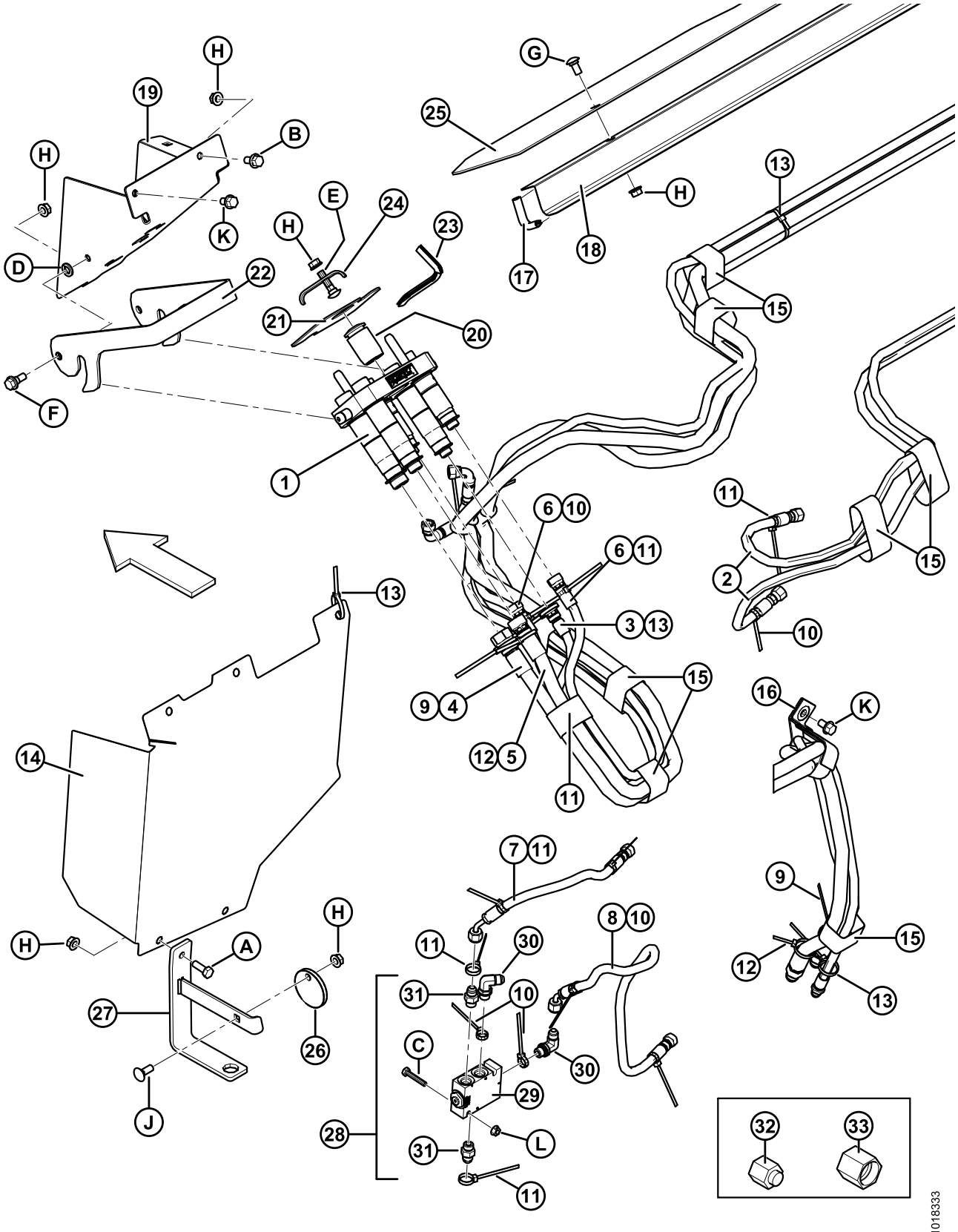

Ref	Part Number	Description	Qty	Serial Number
1	245820	COUPLING – MULTI JOHN DEERE (PARKER) [43]	OPT	
	129120	COUPLING – MULTI JOHN DEERE (FASTER)	1	
	279011	KIT – COUPLER 3/8 C/W 3/8 IN. FITTING	2	
	279012	KIT – COUPLER 9/16 C/W 5/8 IN. FITTING	1	
	279013	KIT – COUPLER 9/16 C/W 1/2 IN. FITTING	1	
	279014	KIT – COUPLER 9/16 C/W 3/8 IN. FITTING	1	
	279034	SEAL – SHAPED, 3/8 IN.	2	
	279035	SEAL – SHAPED, 9/16 IN.	3	
2	156759	HOSE – HYDRAULIC 1/4 IN. I.D. 4330 MM LG 100R17	2	
3	156910	HOSE – HYDRAULIC 1/4 IN. I.D. 5530 MM LG 100R17	1	
4	156939	HOSE – HYDRAULIC 1/2 IN. I.D. 5530 MM LG 100R17	1	
5	156970	HOSE – HYD 1/2 IN. I.D. 5530 MM LG 100R17, METAL REIN.	1	
6	279281	HOSE – HYDRAULIC 1/4 IN. I.D. 1220 MM LG 100R17	2	
7	279282	HOSE – HYDRAULIC 1/4 IN. I.D. 355 MM LG 100R17	1	
8	279283	HOSE – HYDRAULIC 1/4 IN. I.D. 635 MM LG 100R17	1	
9	40701	FASTENER – CABLE TIE (YELLOW)	2	
10	40702	FASTENER – CABLE TIE (RED)	4	
11	49227	FASTENER – CABLE TIE (GREEN)	4	
12	49232	FASTENER – CABLE TIE (WHITE)	2	
13	21763	FASTENER – CABLE TIE (BLACK)	5	
14	133268	COVER – COUPLERS	1	
15	135444	FASTENER – CINCH STRAP 6 IN. LG	13	
16	163598	STRAP – VELCRO, HANGING	1	
17	42589	MOULDING	2	
18	156725	COVER – HOSE	1	
19	133270	BRACKET – COUPLER (JD 60)	1	
20	129148	PLUG – RUBBER	1	
21	129149	PAD – RUBBER	1	

NOTE:
(MD #B6202) – JD 60/70 SERIES COMPLETION PACKAGE (2017–FORWARD) includes Adapter, Hydraulic, and Electrical Completion Packages to complete a stand-alone CA25 or to convert an existing factory installed CA25. Kits available through Whole Goods only.

43. Parker coupling (MD #245820) is interchangeable with Faster coupling (MD #129120) as a complete assembly only (coupling service parts are not interchangeable). Parker coupling includes two bushings (MD #182181), plate (MD #182182), three couplers (MD #184460), two couplers (MD #191704), fittings (MD #184461, 184462, 184463), two fittings (MD #191705), seal kits (MD #129859, 129860), and two bolts (MD #184524).

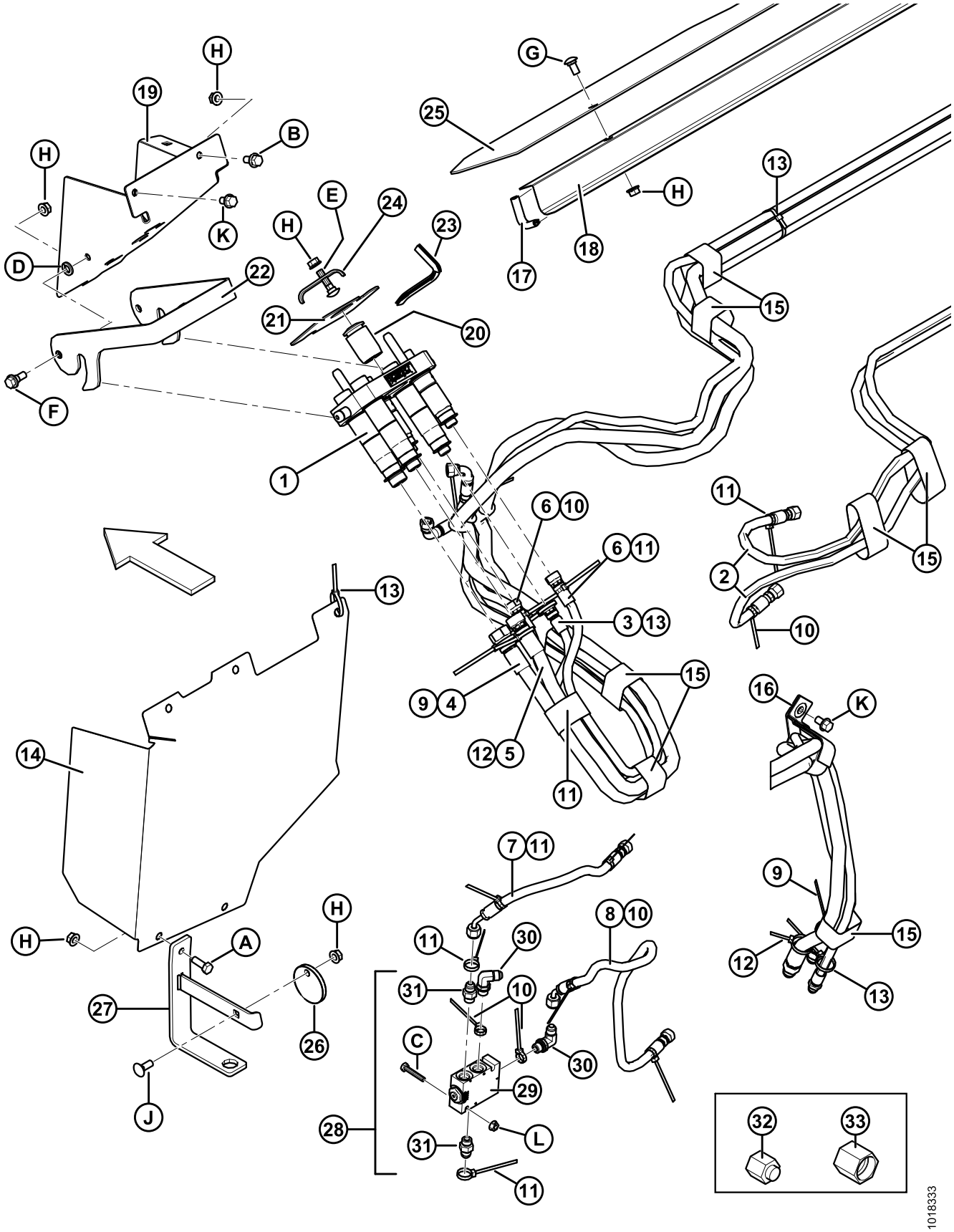
H
19
B
H
K
D
22
F
H
E
24
23
21
20
1
G
25
H
18
17
13
15
11
15
2
10
6
10
6
11
3
13
15
9
4
12
5
11
13
14
H
A
27
26
J
H
7
11
11
30
31
10
C
29
28
31
L
11
8
10
30
16
K
9
15
12
13
32
33
1018333

Ref	Part Number	Description	Qty	Serial Number
22	129143	LATCH – COUPLER BRACKET	1	
23	109791	MOULDING	1	
24	103351	HOLDER	1	
25	187723	COVER – TOP FEED AUGER	1	
26	133165	DISC – LOCK, DRIVELINE	1	
27	133166	BRACKET – DRIVELINE HANGER WELDT	1	
28	279280	MANIFOLD ASSY C/W CHECK VALVE AND FITTINGS [44]	1	
29	279163	MANIFOLD C/W CHECK VALVE [45]	1	
	279227	MANIFOLD	1	
	279228	CHECK VALVE	1	
30	30282	FITTING – ELBOW HYD	2	
	50219	O-RING		
31	15903	FITTING – ADAPTER HYD	2	
	50219	O-RING		
32	30813	CAP – 3/8 IN. TUBE 37° FLARE (FOR SHIPPING ONLY)	1	
33	108233	CAP – 1/2 IN. TUBE (FOR SHIPPING ONLY)	1	
A	20077	BOLT – HEX HD 3/8 NC X 1.0 LG GR 5 ZP		
B	21821	BOLT – HH FLG (SER FACE) 3/8 NC X 0.75 GR 5 ZP		
C	21574	BOLT – HH 1/4 NC X 1.5 LG GR 5 ZP		
D	18652	WASHER – REG LOCK 7/16 IN. NOM. I.D. ZP		
E	21484	BOLT – RHSN 3/8 NC X 1.5 LG GR 5 ZP		
F	27647	BOLT – SHOULDER		
G	21863	BOLT – RHSSN 3/8 NC X 0.75 LG GR 5 ZP		
H	30228	NUT – FLANGE DT SMOOTH FACE 0.375-16 UNC		
J	19965	BOLT – RHSN 3/8 NC X 1.0 GR 5 ZP		
K	101898	SCREW – SELF TAPPING 3/8 NC X 5/8 LG		
L	135248	NUT – FLG DT SMTH FACE 1/4-20 UNC GR 5 ZP		

NOTE:
(MD #B6202) – JD 60/70 SERIES COMPLETION PACKAGE (2017–FORWARD) includes Adapter, Hydraulic, and Electrical Completion Packages to complete a stand-alone CA25 or to convert an existing factory installed CA25. Kits available through Whole Goods only.

44. Includes manifold complete with check valve (MD #279163), two elbow fittings (MD #30282), and two adapter fittings (MD #15903).
45. Includes manifold (MD #279227) and check valve (MD #279228).

36 John Deere 50/60/70 Series – Electrical Completion

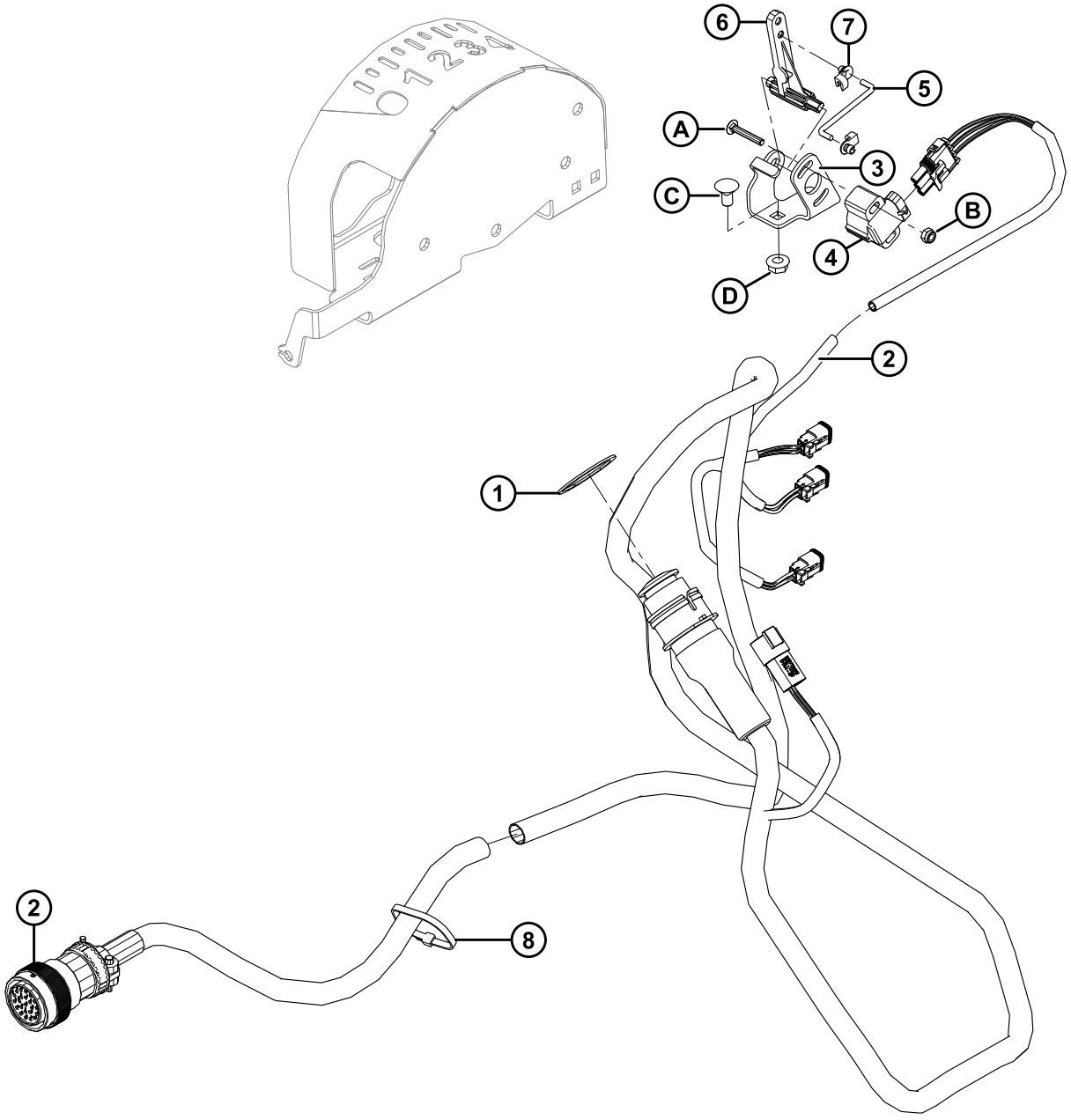

1004428

Ref	Part Number	Description	Qty	Serial Number
1	135267	RING – INVERTED EXT RETAINING	1	
2	220330	HARNESS – WIRING (JD 60/70 SERIES)	1	
	156614	HARNESS – WIRING (JD 50 SERIES)	1	
3	187670	SUPPORT – SENSOR MOUNT (CNH / JD / AGCO)	1	
4	158069	CONTROL – POTENTIOMETER	1	
5	158633	ROD – LINKAGE	1	
6	187193	ARM – SENSOR CONTROL	1	
7	153492	CLIP – ROD END	2	
8	21763	FASTENER – CABLE TIE (BLACK)	3	
A	136018	BOLT – RHSN #10-24 NC X 1.25 IN. LG		
B	105197	NUT – HEX LOCK .187-24 UNC		
C	135305	BOLT – RHSN 5/16 NC X 0.63 GR 5 ZP		
D	30280	NUT – FLG SIDE LK SMTH FACE 5/16 NC GR 5 ZP		

NOTE:
(MD #B5670) – JD 50 SERIES COMPLETION PACKAGE, (MD #B5669) – JD 60/70 SERIES COMPLETION PACKAGE **(2016–PRIOR)**, **(MD #B6202) – JD 60/70 SERIES COMPLETION PACKAGE (2017–FORWARD)** includes Adapter, Hydraulic, and Electrical Completion Packages to complete a stand-alone CA25 or to convert an existing factory installed CA25. Kits available through Whole Goods only.

37 Lexion 500/700 Series – Adapter Completion

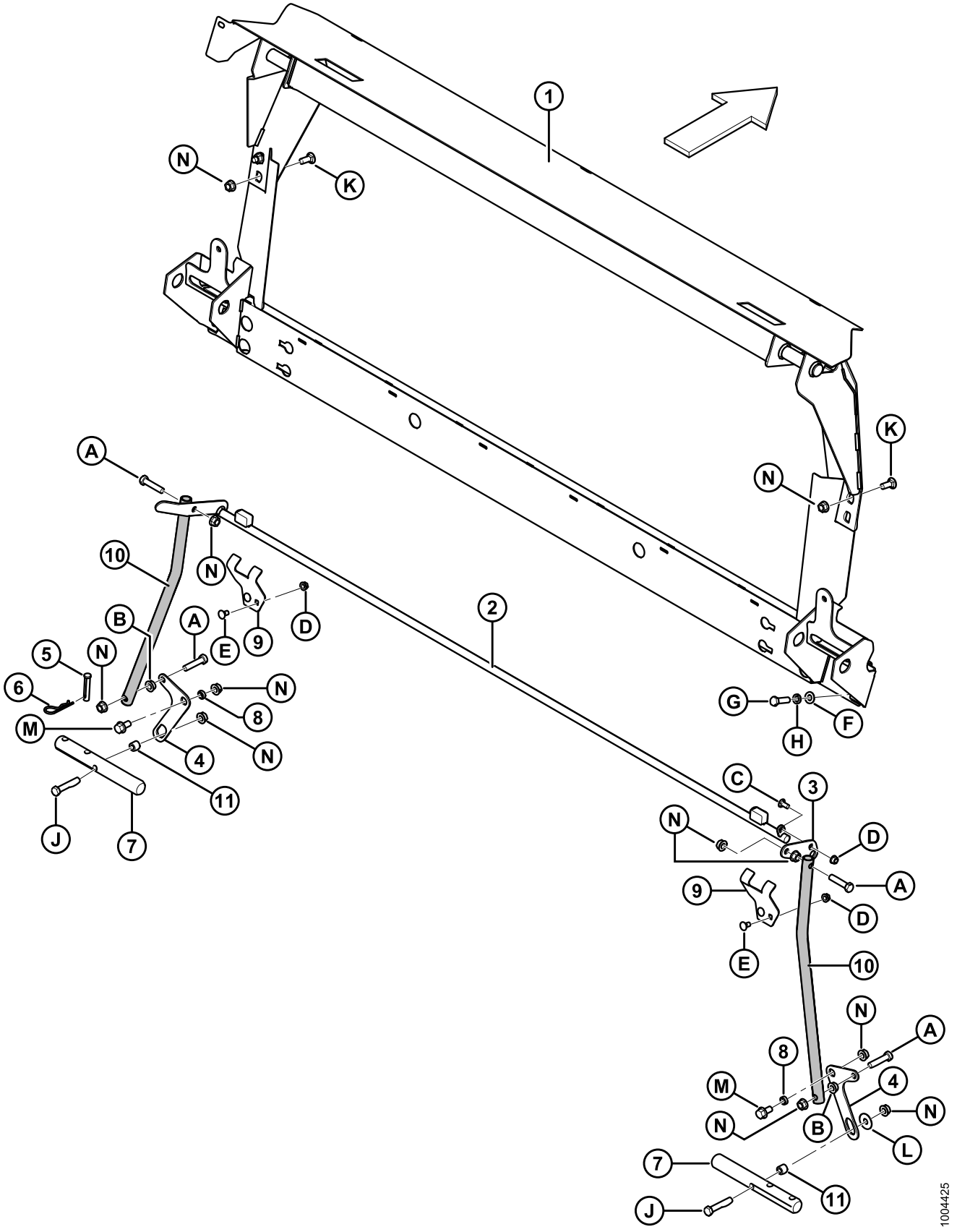

LEXION 500/700 SERIES – ADAPTER COMPLETION

Ref	Part Number	Description	Qty	Serial Number
1	245357	FRAME – LEXION TRANSITION	1	
2	156232	LATCH – WELDMENT	1	
3	156784	LEVER	1	
4	156779	LEVER	2	
5	19809	PIN – CLEVIS	1	
6	13125	PIN – HAIR	1	
7	133138	SHAFT	2	
8	133439	SPACER	2	
9	245246	SUPPORT – LOCK KEEPER	2	
10	156783	TUBE – LINK	2	
11	156780	BUSHING	2	
A	30833	BOLT – HH 1/2 NC X 2.25 TFL GR 5 ZP		
B	21383	NUT – FLANGE .500-13 UNC (SER FACE)		
C	21863	BOLT – RHSSN 3/8 NC X 0.75 LG GR 5 ZP		
D	30228	NUT – FLANGE DT SMOOTH FACE 0.375-16 UNC		
E	21472	BOLT – RHSN 3/8 NC X 0.75 GR 5 ZP		
F	18599	WASHER – SAE FLAT 17/32 I.D. X 1-1/16 IN. O.D. ZP		
G	50072	BOLT – HH 1/2 NC X 1.75 TFL GR 5 ZP		
H	18638	WASHER – REG LOCK 1/2 IN. NOM. I.D. ZP		
J	21880	BOLT – HH 1/2 NC X 2.75 LG GR 5 ZP		
K	21471	BOLT – RHSN 1/2 NC X 1.25 GR 5 ZP		
L	32247	WASHER – FLAT		
M	21449	BOLT – HH FLG (SER FACE) 1/2 NC X 1.0 GR 5 ZP		
N	50186	NUT – FLANGE LOCK SM FACE DT 0.500-13 UNC GR 5		

NOTE:
(MD #B5672) – 500/600/700 SERIES LEXION COMPLETION PACKAGE includes Adapter, Hydraulic, and Electrical Completion Packages to complete a stand-alone CA25 or to convert an existing factory installed CA25. Kits available through Whole Goods only.

38 Lexion 500/700 Series – Hydraulic Completion

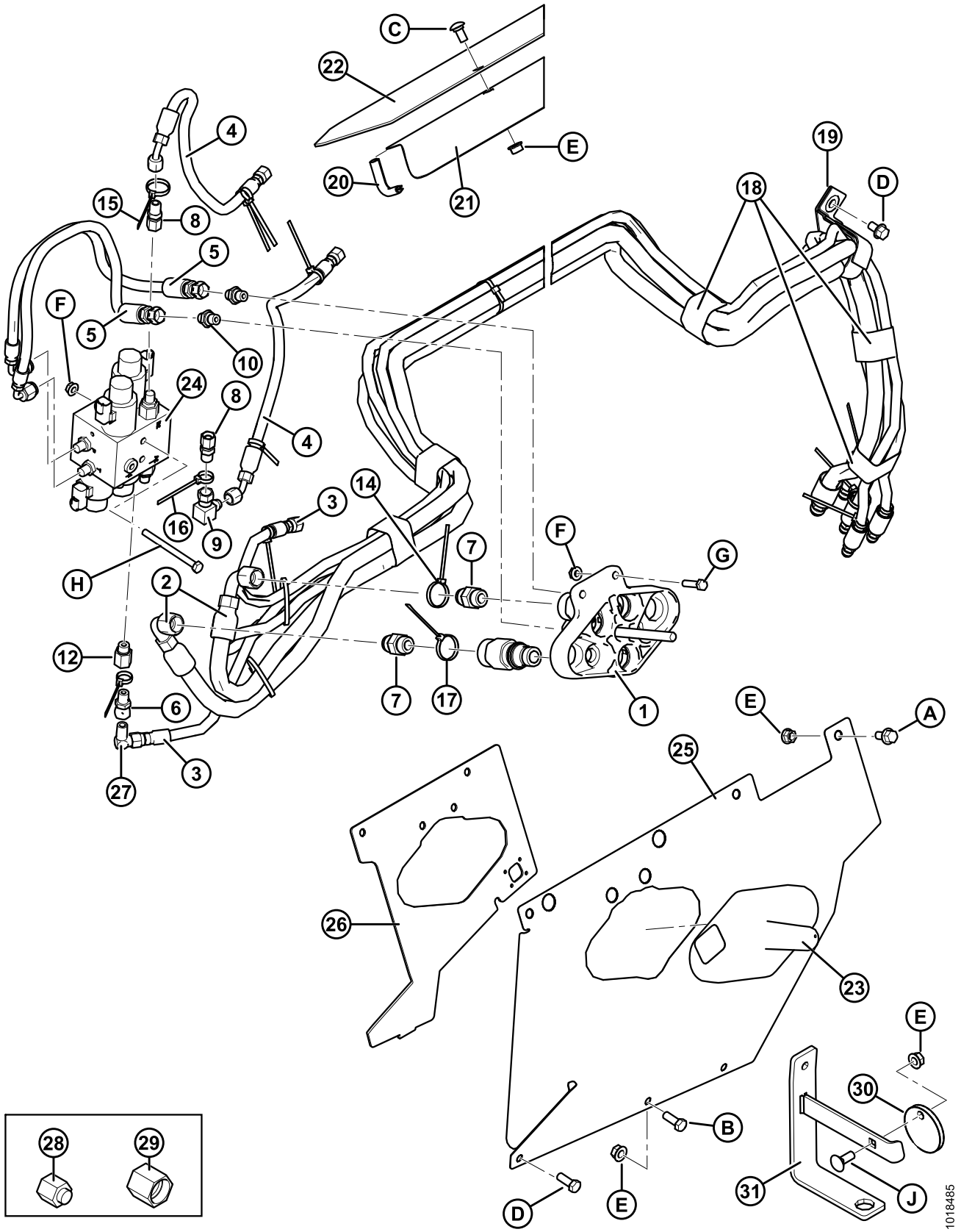

Ref	Part Number	Description	Qty	Serial Number
1	190866	COUPLER – LEXION MULTILINK	1	
2	156758	HOSE – HYDRAULIC 1/2 IN. I.D. 4330 MM LG 100R17	2	
3	156759	HOSE – HYDRAULIC 1/4 IN. I.D. 4330 MM LG 100R17	3	
4	133260	HOSE – HYD 1/4 IN. I.D. 470 MM LG 100R17, METAL REIN.	2	
5	129962	HOSE – HYD 1/4 IN. I.D. 500 MM LG 100R17, METAL REIN.	2	
6	30302	FITTING – CONNECTOR HYD 0.052 IN. DIA ORIFICE	1	
7	30695	FITTING – CONNECTOR HYD STRGHT THRD SHORT SAE	2	
	44210	**O-RING**		
8	103921	FITTING – ADAP HYD M14-1.5 METRIC COMP X #6 37° FLARE	2	
9	106717	FITTING – ELBOW 90° HYD	1	
10	129961	FITTING – UNION HYD	2	
12	135425	FITTING – ADAPTER HYD	1	
14	40701	FASTENER – CABLE TIE (YELLOW)	**3**	
15	40702	FASTENER – CABLE TIE (RED)	**3**	
16	49227	FASTENER – CABLE TIE (GREEN)	**3**	
17	49232	FASTENER – CABLE TIE (WHITE)	**2**	
18	135444	FASTENER – CINCH STRAP 6 IN. LG	**9**	
19	163598	STRAP – VELCRO, HANGING	1	
20	42589	MOULDING	2	
21	156725	COVER – HOSE	1	
22	187723	COVER – TOP FEED AUGER	1	
23	129481	COVER	1	
24	129963	VALVE – HYDRAULIC (SUPPLIER # CLAAS 039 841.1)	1	
25	187976	COVER – COUPLERS	1	
26	187977	HOLDER – COUPLER	1	
27	30281	FITTING – ELBOW 90° HYD	1	
28	30813	CAP – 3/8 IN. TUBE 37° FLARE (FOR SHIPPING ONLY)	1	
29	108233	CAP – 1/2 IN. TUBE (FOR SHIPPING ONLY)	1	
30	**133165**	**DISC – LOCK, DRIVELINE HANGER**	**1**	
31	**133166**	**BRACKET – DRIVELINE HANGER WELDT**	**1**	

NOTE:
(MD #B5672) – 500/600/700 SERIES LEXION COMPLETION PACKAGE includes Adapter, Hydraulic, and Electrical Completion Packages to complete a stand-alone CA25 or to convert an existing factory installed CA25. Kits available through Whole Goods only.

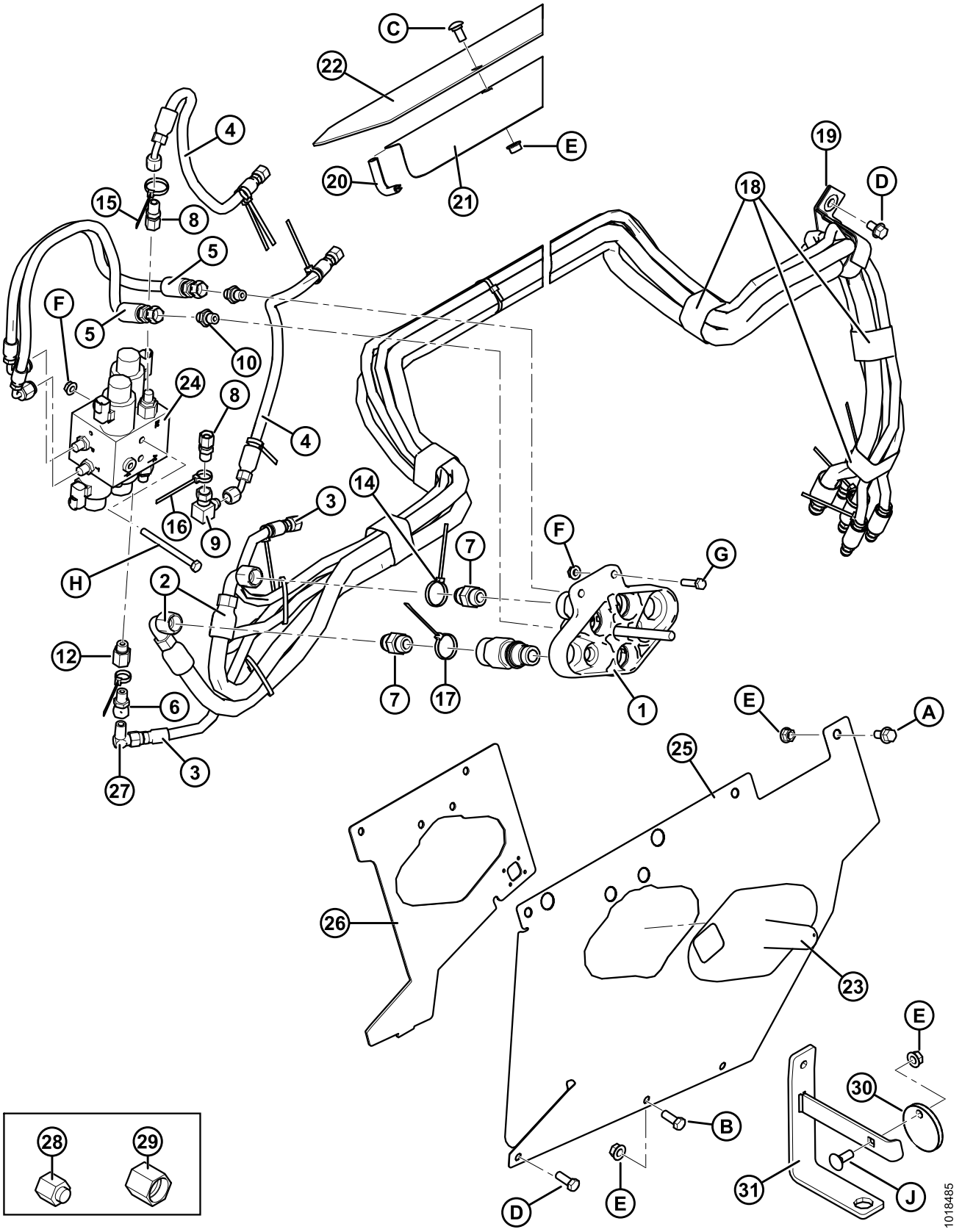
C
22
4
E
20
21
19
D
18
15
8
5
F
5
10
24
8
4
14
3
16
9
7
F
G
H
2
12
7
17
1
E
A
25
6
3
27
26
23
E
30
B
31
J
D
E
28
29
1018485

Ref	Part Number	Description	Qty	Serial Number
A	21821	BOLT – HH FLG (SER FACE) 3/8 NC X 0.75 GR 5 ZP		
B	20077	BOLT – HEX HD 3/8 NC X 1.0 LG GR 5 ZP		
C	21863	BOLT – RHSSN 3/8 NC X 0.75 LG GR 5 ZP		
D	101898	SCREW – SELF TAPPING 3/8 NC X 5/8 LG		
E	30228	NUT – FLANGE DT SMOOTH FACE 0.375-16 UNC		
F	30280	NUT – FLG SIDE LK SMTH FACE 5/16 NC GR 5 ZP		
G	21526	BOLT – HH 5/16 NC X 1.25 LG GR 5 ZP		
H	50235	BOLT – HH 5/16 NC X 3.75 LG GR 5 ZP		
J	**19965**	**BOLT – RHSN 3/8 NC X 1.0 GR 5 ZP**		

NOTE:
(MD #B5672) – 500/600/700 SERIES LEXION COMPLETION PACKAGE includes Adapter, Hydraulic, and Electrical Completion Packages to complete a stand-alone CA25 or to convert an existing factory installed CA25. Kits available through Whole Goods only.

39 Lexion 500/700 Series – Electrical Completion

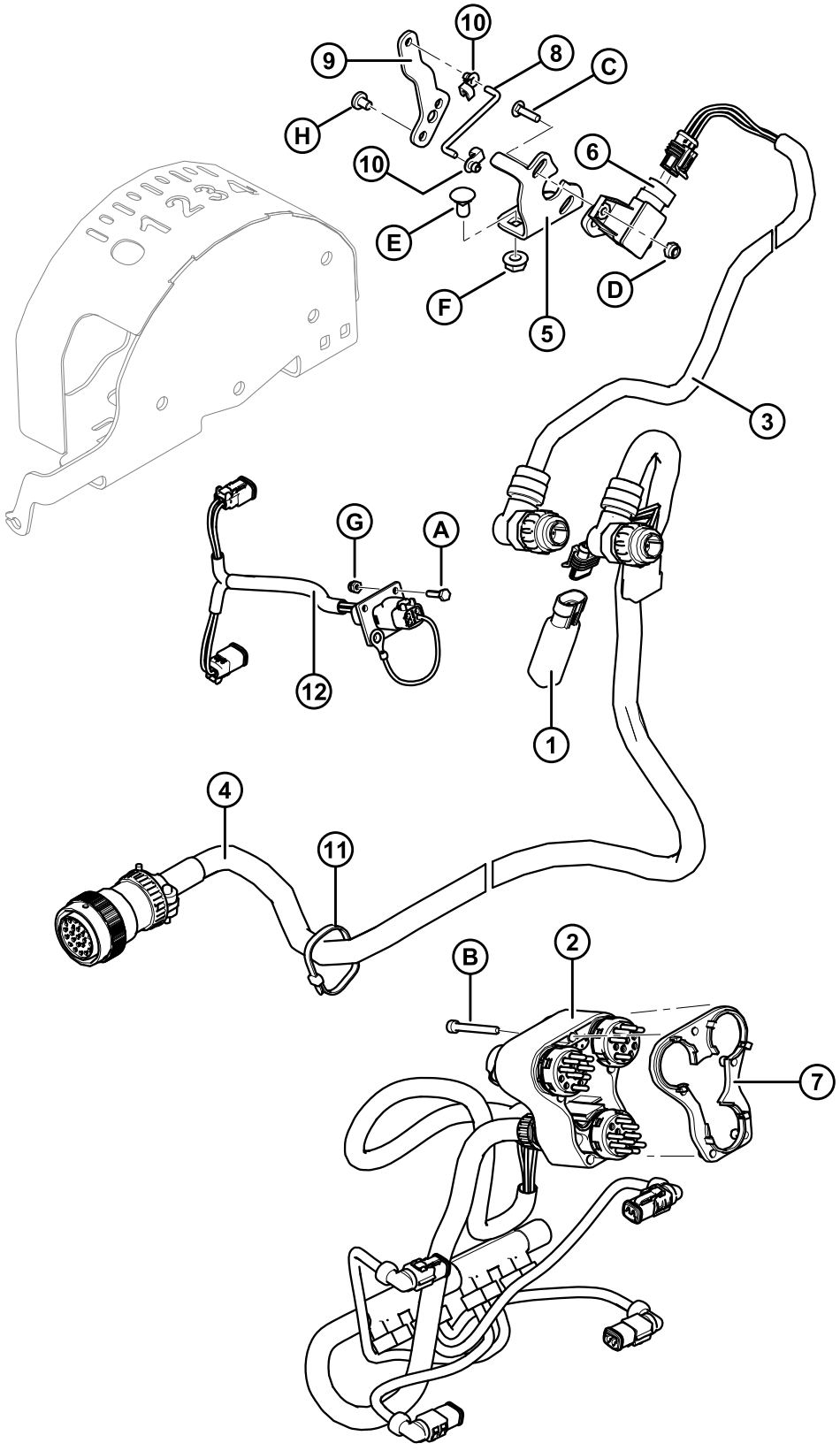

Ref	Part Number	Description	Qty	Serial Number
1	133683	REGULATOR – VOLTAGE	1	
2	129772	HARNESS – WIRING, 2 FUNCTION CLAAS 500 WITH DEUTSCH ELEC CONNECTOR	1	
3	220340	HARNESS – WIRING LEXION AHHC	1	
4	220354	HARNESS – WIRING LEXION	1	
5	187686	SUPPORT – SENSOR MOUNT LEXION 12V	1	
6	158666	SENSOR – ANGLE (LEXION)	1	
7	129773	SPACER – WIRING HARNESS	1	
8	158633	ROD – LINKAGE	1	
9	156268	ARM – LEXION 12V	1	
10	153492	CLIP – ROD END	2	
11	21763	FASTENER – CABLE TIE (BLACK)	4	
12	**NSS**	**HARNESS – WIRING, REEL FORE-AFT/HEADER TILT VALVE** [46]		
A	**197319**	**BOLT – HEX HD TFL M4 X 0.7 X 16-8.8-A2L**		
B	129965	SCREW – HEX SOC HD ISO 4762		
C	158722	BOLT – RHSN #10-24 NC X 3/4 GR 2 ZP		
D	105197	NUT – HEX LOCK .187-24 UNC		
E	135305	BOLT – RHSN 5/16 NC X 0.63 GR 5 ZP		
F	30280	NUT – FLG SIDE LK SMTH FACE 5/16 NC GR 5 ZP		
G	**197320**	**NUT – HEX NYLOC M4 X 0.7-8-A2L**		
H	**158704**	**SCREW – PAN HD M6 X 1 X 8-4.8-A2L**		

NOTE:
(MD #B5672) – 500/600/700 SERIES LEXION COMPLETION PACKAGE includes Adapter, Hydraulic, and Electrical Completion Packages to complete a stand-alone CA25 or to convert an existing factory installed CA25. Kits available through Whole Goods only.

46. Was previously harness (MD #220396) for 2012 and prior model year combine adapters, which is replaced by harness (MD #220354). To service this part for 2012 and prior model year combine adapters, order Lexion wiring harness (MD #220354).

40 Conversion Kits

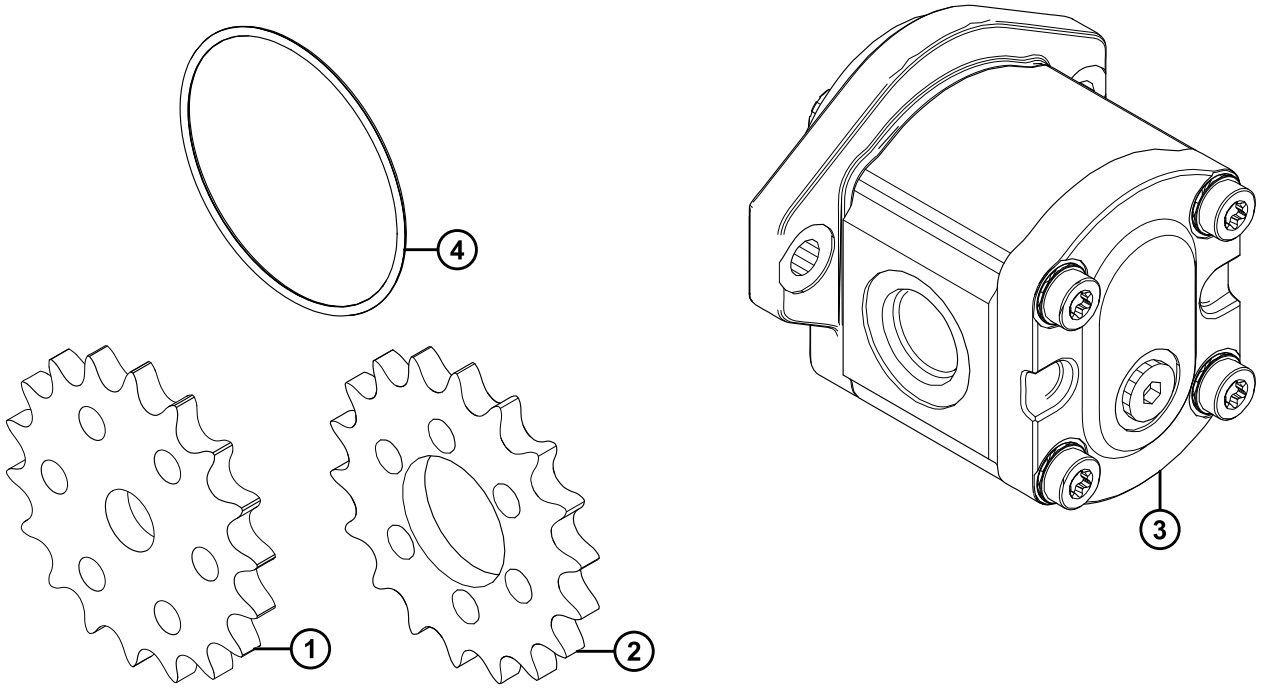

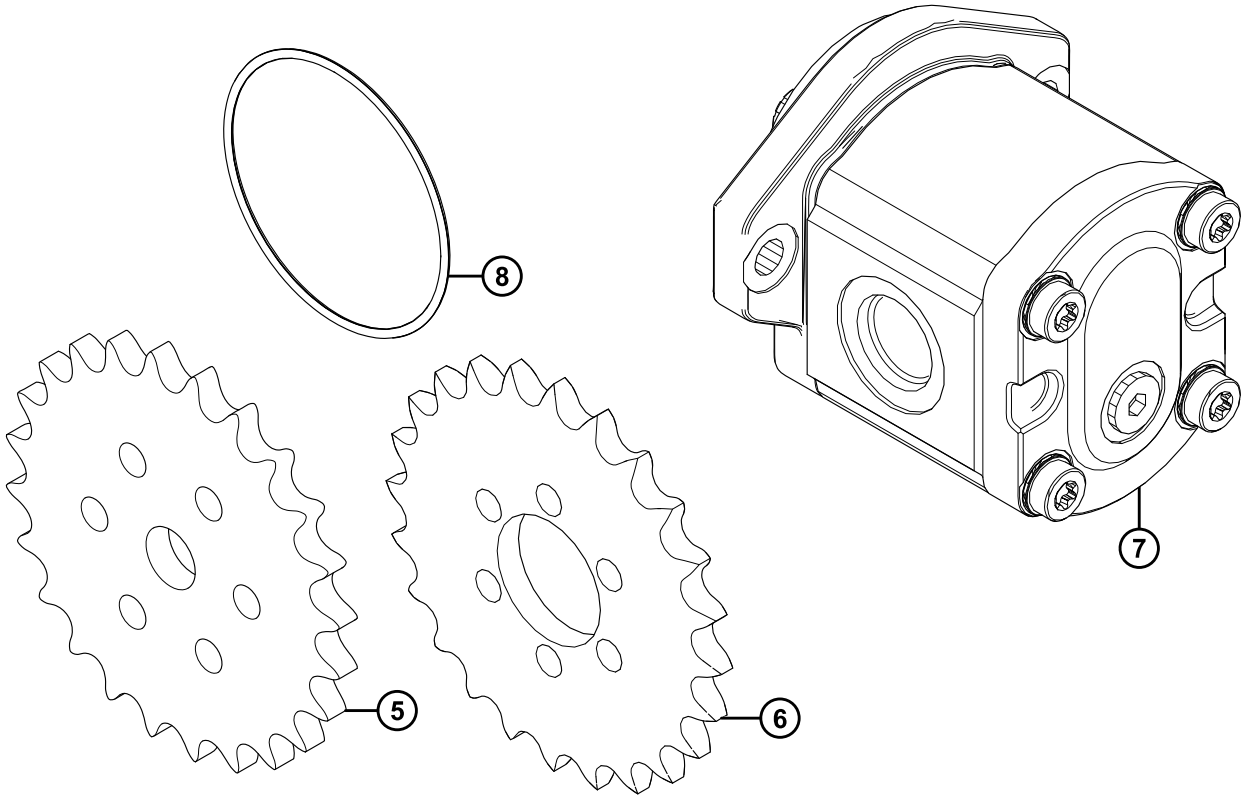

Ref	Part Number	Description	Qty	Serial Number
	B5082	KIT – CONVERT “CNH/JD” TO “AGCO/LEXION[47]		
1	151684	SPROCKET – RC 50 A 18 T	1	
2	187497	SPROCKET – 50 A 18 (DRIVEN)	1	
3	156853	PUMP – GEAR 11 CC	1	
	187967	SEAL KIT		
	187253	PUMP – GEAR 11 CC, CASAPPA (OPTIONAL)	1	
	187918	SEAL KIT		
4	49802	O-RING	1	
	B5083	KIT – CONVERT “AGCO/LEXION” TO “CNH/JD”[47]		
5	151686	SPROCKET – RC 50 A 24 T	1	
6	187496	SPROCKET – 50 A 24 (DRIVEN)	1	
7	156852	PUMP – GEAR 16 CC	1	
	187967	SEAL KIT		
	187252	PUMP – GEAR 16 CC, CASAPPA (OPTIONAL)	1	
	187918	SEAL KIT		
8	49802	O-RING	1	

47. Kits available through Whole Goods only.

41 Reel Speed Sensors

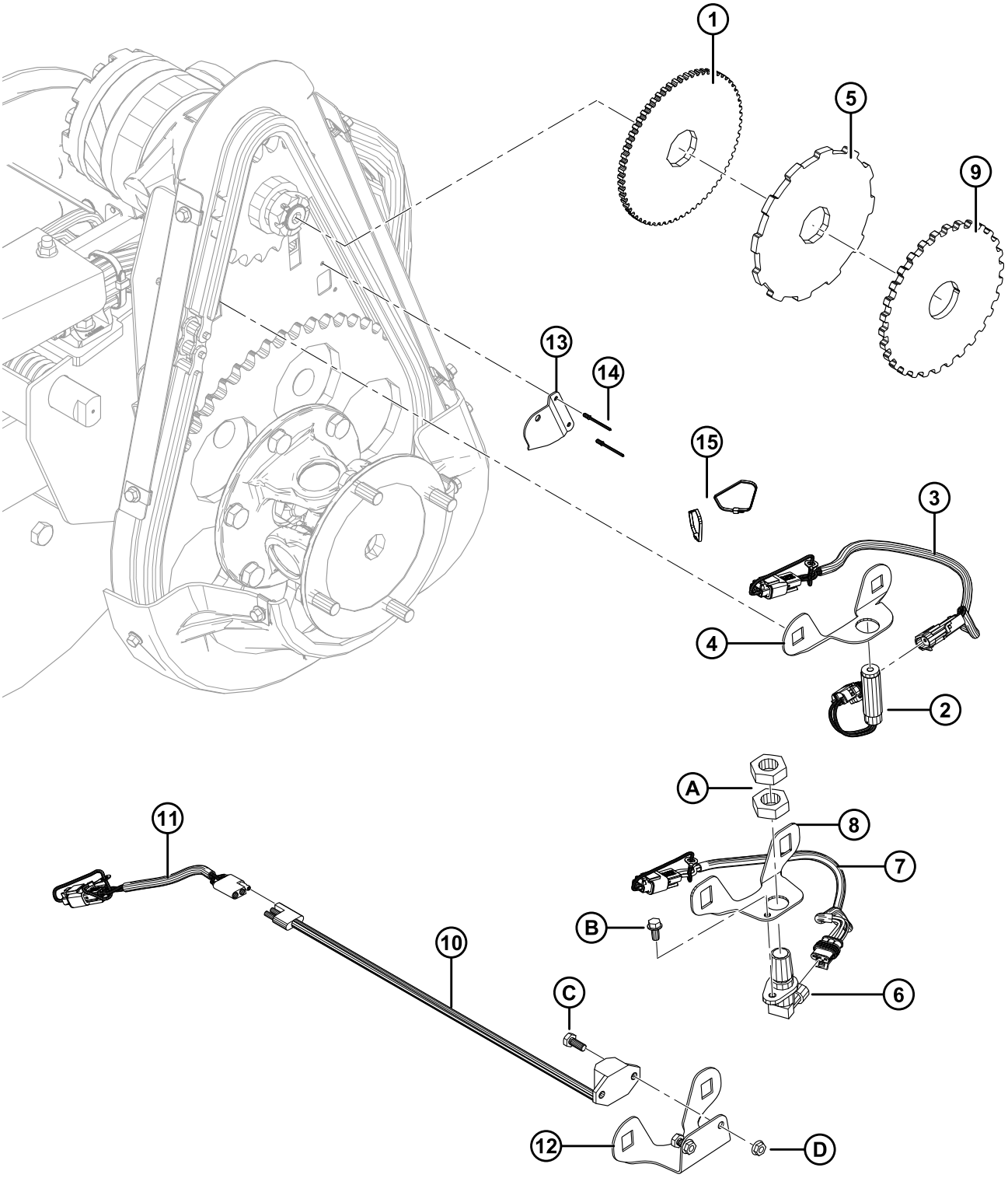

REEL SPEED SENSORS

Ref	Part Number	Description	Qty	Serial Number
1	133716	DISC – REEL SPEED SENSOR (JD)	1	
2	184437	SENSOR – REEL SPEED AH116104 (JD)	1	
3	220571	HARNESS – WIRING, REEL SPEED SENSOR (JD)	1	
4	133781	SUPPORT – REEL SPEED SENSOR (JD)	1	
5	133886	DISC – REEL SPEED SENSOR (LEXION)	1	
6	129459	SENSOR – REEL SPEED (LEXION)	1	
7	220573	HARNESS – WIRING REEL SPEED SENSOR (LEXION)	1	
8	172423	SUPPORT – REEL SPEED SENSOR (LEXION)	1	
9	133997	DISC – REEL SPEED SENSOR (AGCO/GLEANER)	1	
10	152736	SENSOR – REEL SPEED 3 PIN (AGCO)	1	
	184440	SENSOR – REEL SPEED 2 PIN (GLEANER)	1	
11	220572	HARNESS – WIRING REEL SPEED SENSOR (AGCO/GLEANER)	1	
12	**279746**	**SUPPORT – REEL SPEED SENSOR (AGCO/GLEANER)**	**1**	
13	164131	SHIELD – REEL SPEED SENSOR HARNESS	1	
14	14338	RIVET – BLIND 1/8 X .125	2	
15	16661	FASTENER – NYLON TIE [48]		
A	7674	NUT – HEX JAM 3/4-16 UNF GR 5 ZP		
B	21055	SCREW – SELF TAP HEX WASH HD 1/4 NC X 1/2		
C	21572	BOLT – HEX HD 1/4 NC X 0.625 LG GR 5 ZP		
D	21455	NUT – FLG (SER FACE) 1/4 NC GR 5 ZP		

48. Quantities: John Deere (JD) and AGCO/Gleaner = 2 / Lexion = 1

42 Double Knife Completion Package

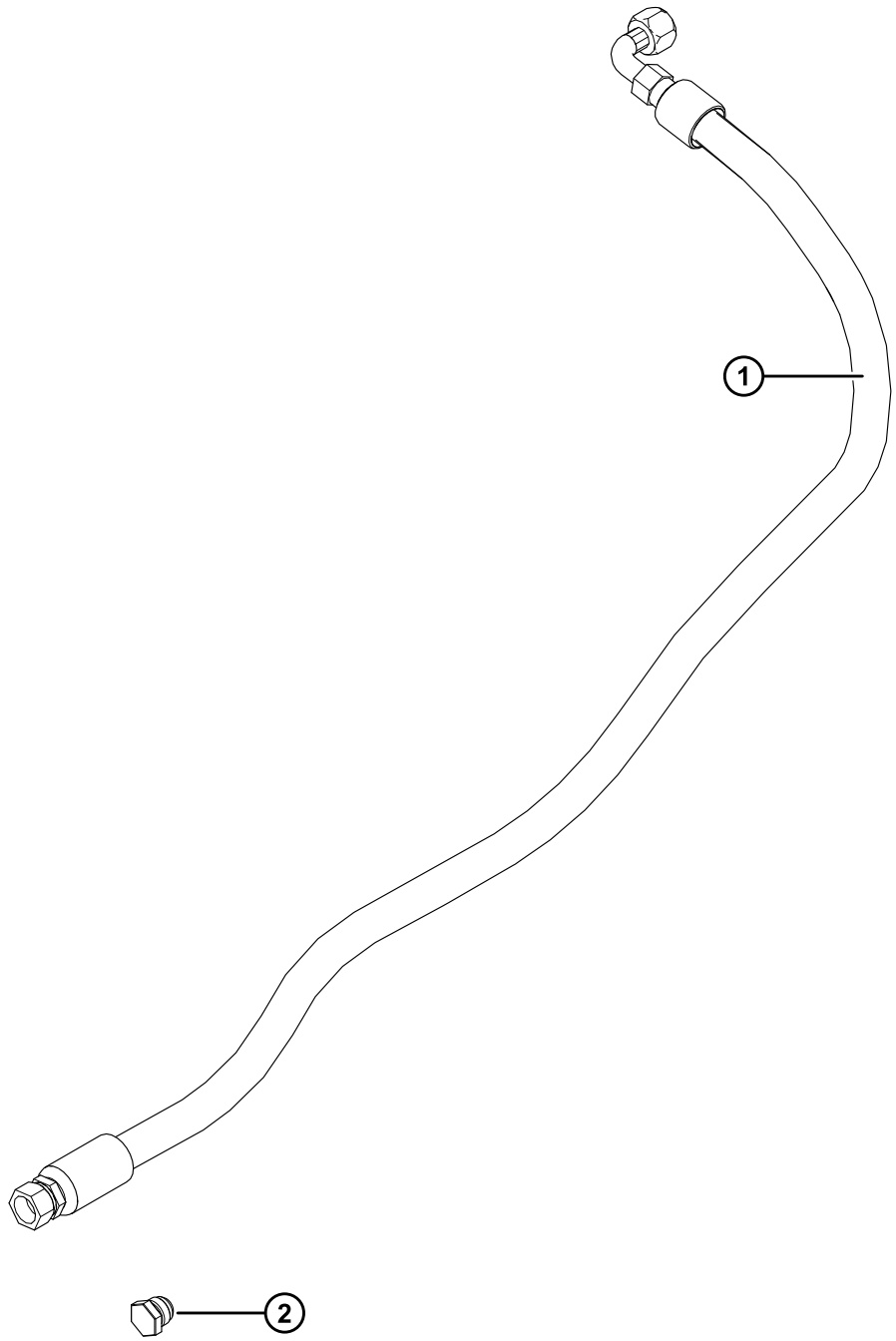

1004682

DOUBLE KNIFE COMPLETION PACKAGE

Ref	Part Number	Description	Qty	Serial Number
	B5682	KIT – DOUBLE KNIFE COMPLETION PACKAGE [49]		
1	123887	HOSE – HYD 1/2 IN. I.D. 1020 MM LG 100R17, METAL REIN.	1	
2	135374	PLUG – 1/2 IN. TUBE [50]	1	

49. Kits available through Whole Goods only.
50. Not part of kit B5682. Must be ordered separately if required.

43 (Option) Auger Flighting Extensions

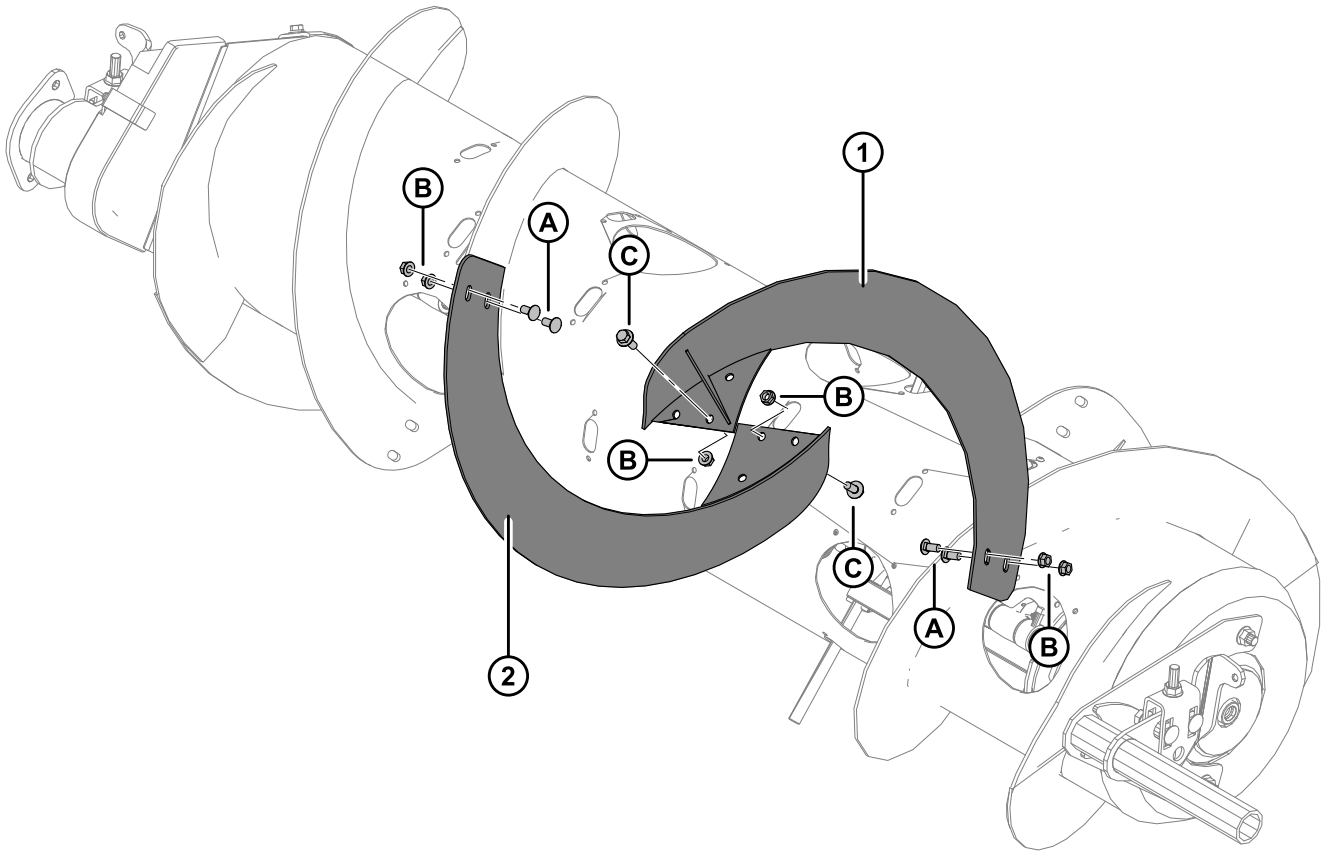

1007787

(OPTION) AUGER FLIGHTING EXTENSIONS

Ref	Part Number	Description	Qty	Serial Number
	B4829	KIT – AUGER FLIGHTING EXTENSIONS [51]		
1	133147	FLIGHTING – EXTENSION, RH SIDE (LH HELIX)	1	
2	133148	FLIGHTING – EXTENSION, LH SIDE (RH HELIX)	1	
A	21863	BOLT – RHSN 3/8 NC X 3/4 IN. GR 5		
B	30228	NUT – SMOOTH FLANGE 3/8 NC DISTORTED THREAD		
C	21447	BOLT – HEX FLANGE HEAD 3/8 NC X 1 IN. GR 5		

51. Kits available through Whole Goods only.

44 (Option) European Adapter Seal Kit

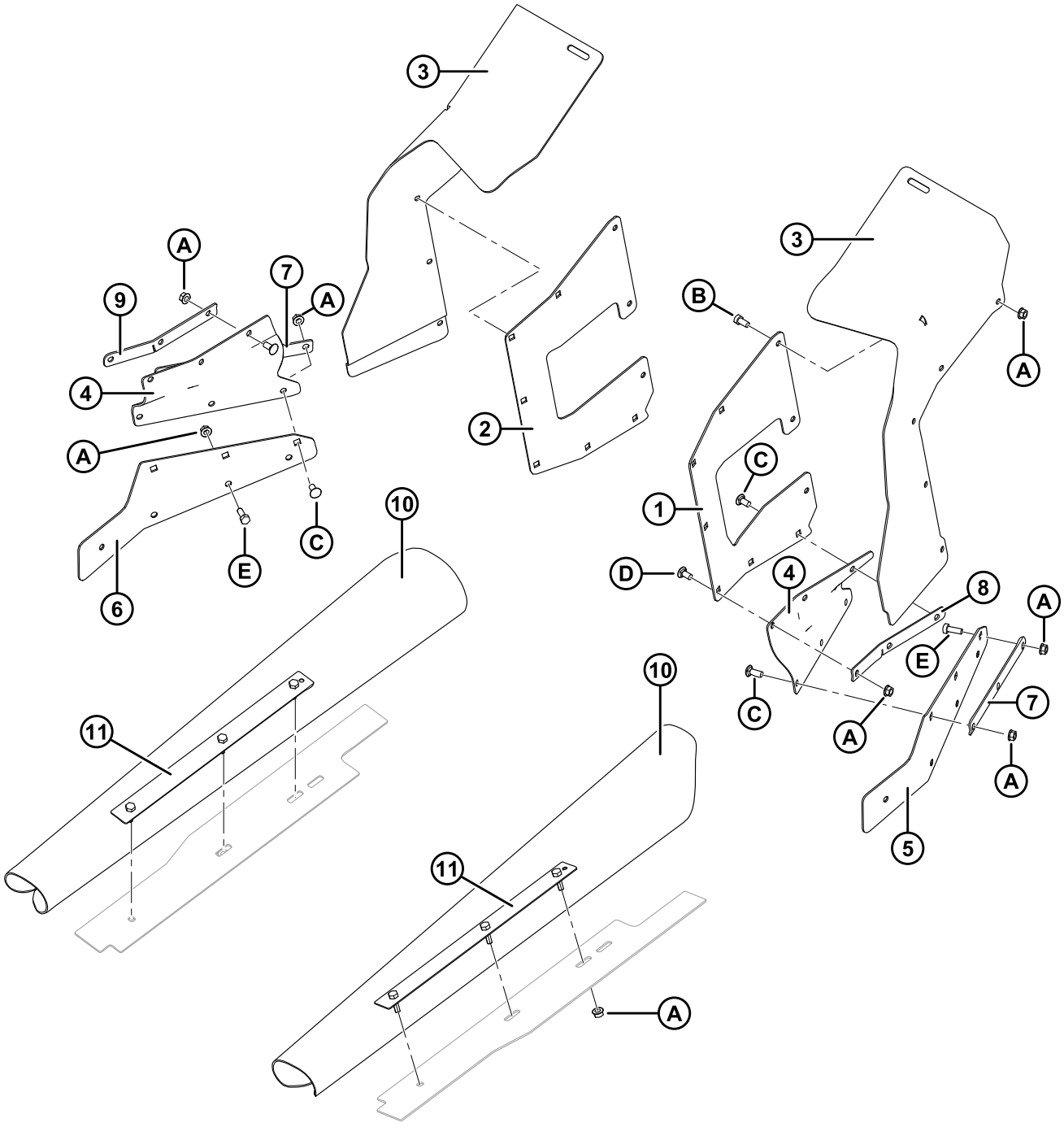

1018238

(OPTION) EUROPEAN ADAPTER SEAL KIT

Ref	Part Number	Description	Qty	Serial Number
	B5612	KIT – EUROPEAN ADAPTER SEAL [52]		
1	**245912**	**PLATE – FILLER BACK UPPER (LH)**	**1**	
2	**245910**	**PLATE – FILLER BACK UPPER (RH)**	**1**	
3	220201	FLAP – REAR SIDE	2	
4	220305	FLAP – RUBBER FILLER	2	
5	**245891**	**PLATE – FILLER BACK LOWER (LH)**	**1**	
6	**245892**	**PLATE – FILLER BACK LOWER (RH)**	**1**	
7	220306	BAR – FLAP RETAINER LOWER	2	
8	220307	BAR – FLAP RETAINER UPPER (LH)	1	
9	220308	BAR – FLAP RETAINER UPPER (RH)	1	
10	123721	FLAP – FILLER DECK	2	
11	220259	ASSY – SIDE FILLER BAR (INCLUDES BOLTS)	2	
A	30228	NUT – FLANGE DT SMOOTH FACE 0.375-16 UNC		
B	21567	BOLT – HEX HD .375-16 UNC X 0.75 LG		
C	21863	BOLT – RHSSN 3/8 NC X 0.75 LG GR 5 ZP		
D	100456	BOLT – RHSSN 3/8 NC X 1.0 GR 5 ZP		
E	20077	BOLT – HEX HD 3/8 NC X 1.0 LG GR 5 ZP		

52. Kits available through Whole Goods only.

45 (Option) Hillside Extension

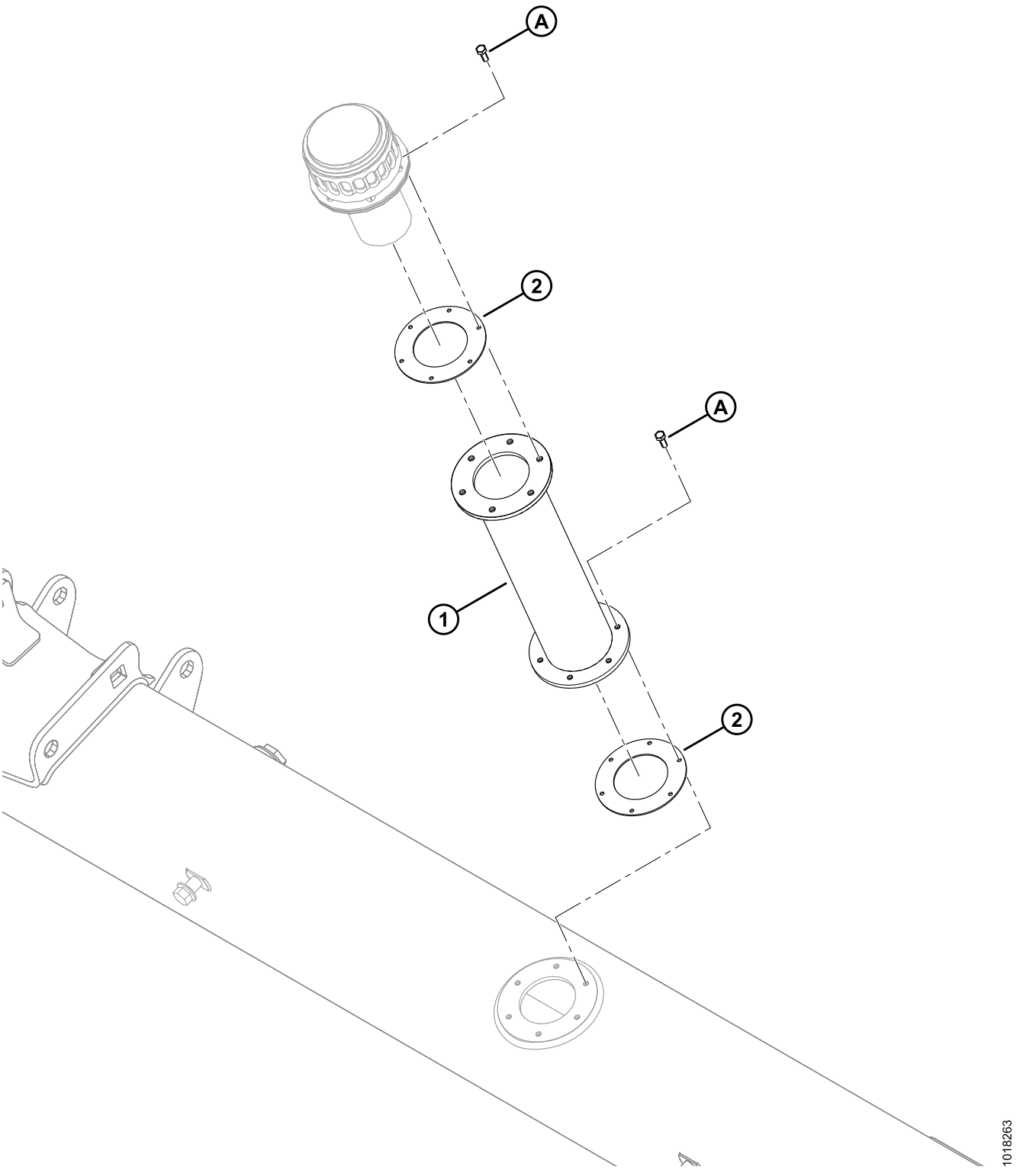

(OPTION) HILLSIDE EXTENSION

Ref	Part Number	Description	Qty	Serial Number
	B6057	**KIT – HYDRAULIC RESERVOIR FILL EXTENSION** [53]		
1	**NSS**	**HYD RESERVOIR FILL EXTENSION**	**1**	
2	**NSS**	**GASKET**	**2**	
A	**135873**	**SCREW – MACH #10-32 X 0.5 IN. HEX**		

53. Includes hydraulic reservoir fill extension (not serviced separately), two gaskets (not serviced separately), two decals (MD #166450), and twelve screws (MD #135873). Kits available through Whole Goods only.

46 (Option) John Deere Adapter Fore/Aft Anti-Drift Kit

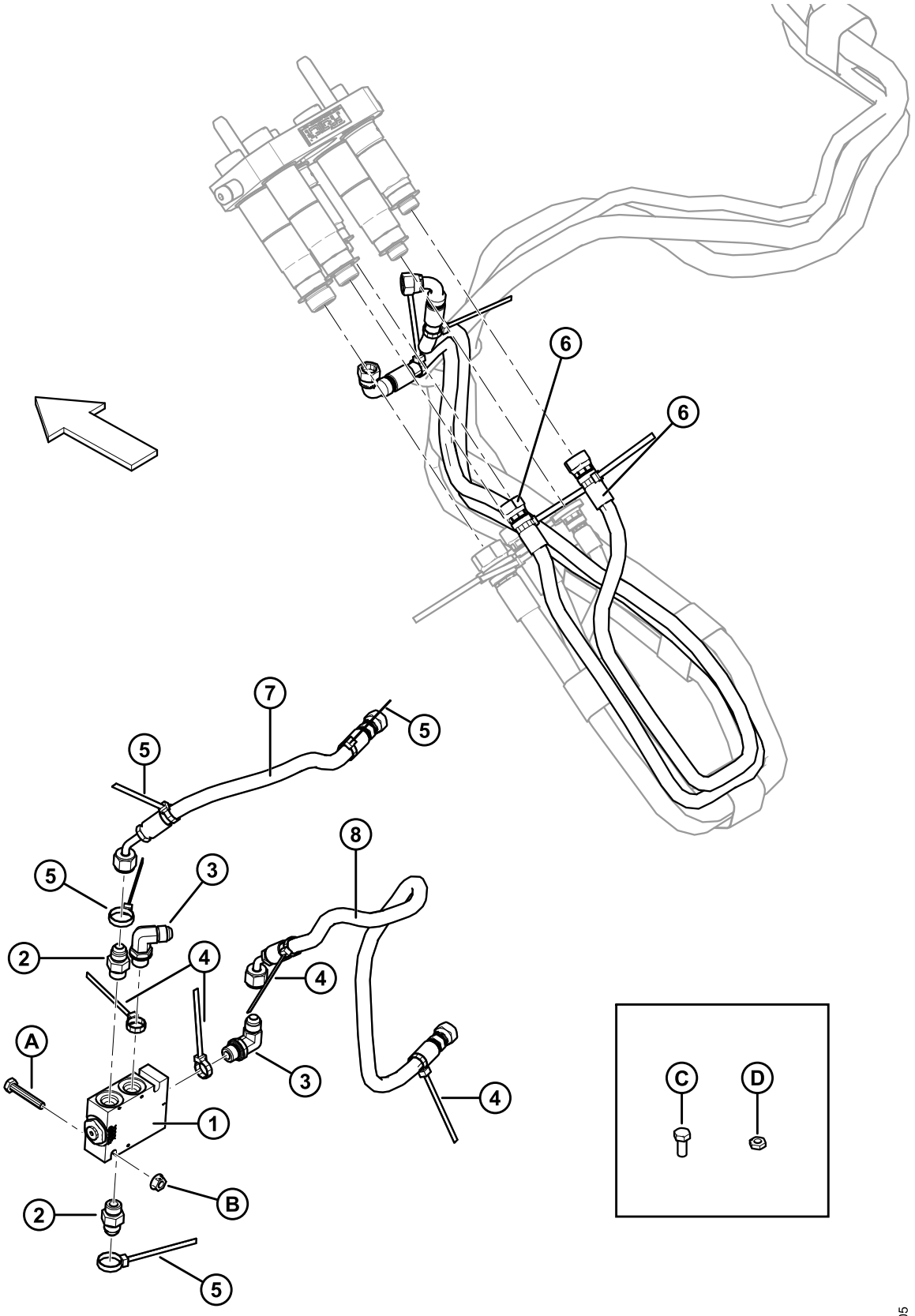

(OPTION) JOHN DEERE ADAPTER FORE/AFT ANTI-DRIFT KIT

Ref	Part Number	Description	Qty	Serial Number
	B6157	**KIT – JD ADAPTER FORE/AFT ANTI-DRIFT** [54]		
1	**279163**	**MANIFOLD WITH CHECK VALVE** [55]	**1**	
	279227	**MANIFOLD**	**1**	
	279228	**CHECK VALVE**	**1**	
2	**15903**	**FITTING – CONNECTOR HYD**	**2**	
3	**30282**	**FITTING – ELBOW 90° HYD**	**2**	
4	**40702**	**FASTENER – CABLE TIE (RED)**	**4**	
5	**49227**	**FASTENER – CABLE TIE (GREEN)**	**4**	
6	**279281**	**HOSE – HYDRAULIC 1/4 IN. I.D. 1220 MM LG 100R17**	**2**	
7	**279282**	**HOSE – HYDRAULIC 1/4 IN. I.D. 355 MM LG 100R17**	**1**	
8	**279283**	**HOSE – HYDRAULIC 1/4 IN. I.D. 635 MM LG 100R17**	**1**	
A	**21574**	**BOLT – HH 1/4 NC X 1.5 LG GR 5 ZP**		
B	**135248**	**NUT – FLG DT SMTH FACE 1/4-20 UNC GR 5 ZP**		
C	**21558**	**BOLT – HEX HD 5/16 NC X 0.75 LG GR 5 ZP**		
D	**19243**	**NUT – HEX JAM 5/16-18 UNC GR 5 ZP**		

54. Used to convert 2016 and prior model year combine adapters to make them compatible with 2017 and later model year John Deere combines. Includes all parts and instructions. Kits available through Whole Goods only.
55. Includes manifold (MD #279227) and check valve (MD #279228).

Index

795 18
1709 46
2149 18
4761 ..... 20, 74
5512 26
7642 14
7674 118
9213 18
9333 18
13125 108
14338 118
15325 20
15903 ..... 94, 104, 128
16652 8
16661 ..... 42, 68, 118
18523 ..... 20, 50
18589 72
18590 ..... 10, 20, 46, 50
18592 ..... 8, 74
18593 46
18596 50
18597 ..... 50, 72
18598 50
18599 ..... 26, 62, 74, 76, 90, 108
18600 ..... 20, 26
18601 46
18604 48
18605 48
18608 44
18609 ..... 44, 48
18626 18
18636 ..... 26, 34, 38, 72
18637 ..... 26, 46
18638 ..... 10, 20, 26, 46, 62, 74, 76, 90, 108
18639 26
18640 ..... 26, 46
18648 18
18652 ..... 66, 100, 104
18669 16
18671 44
18689 46
18720 26
18723 ..... 20, 26, 74
18724 ..... 50, 88
18867 44
18898 24
18963 20
19243 128
19685 12
19809 108
19965 ..... 8, 20, 30, 34, 38, 46, 66, 80, 84, 96, 100, 104, 112
19966 ..... 8, 26, 96
20077 ..... 8, 16, 66, 80, 84, 96, 100, 104, 112, 124
20312 44
21010 2
21055 118
21066 76
21087 ..... 34, 38
21102 ..... 16, 50
21235 18
21248 16
21264 ..... 8, 46
21282 72
21301 ..... 6, 18
21363 24
21383 108
21389 20
21425 24
21447 122
21449 108
21452 8
21455 118
21456 ..... 2, 20, 26
21469 20
21470 ..... 10, 12
21471 ..... 62, 72, 74, 90, 108
21472 ..... 8, 10, 26, 66, 100, 108
21478 16
21484 ..... 66, 100, 104
21485 8
21522 26
21526 112
21540 46
21558 128
21561 8
21567 124
21572 118
21573 88
21574 ..... 104, 128
21575 ..... 10, 20, 46
21583 26
21585 50
21594 26
21747 82
21760 16
21763 ..... 2, 68, 82, 86, 102, 106, 114
21801 ..... 32, 36
21821 ..... 12, 26, 66, 80, 84, 96, 100, 104, 112
21827 26
21828 ..... 34, 38

INDEX

21854 40
21856 ..... 78, 94
21858 96
21859 4
21863 ..... 2, 8, 12, 46, 50, 66, 70, 80, 84, 96, 100, 104, 108, 112, 122, 124
21868 ..... 62, 70, 72, 76
21880 ..... 20, 108
21926 50
23165 52
23745 76
26846 22
27647 ..... 66, 100, 104
29934 94
30027 20
30035 20
30080 46
30203 22
30228 ..... 2, 8, 10, 12, 16, 20, 26, 30, 34, 38, 46, 50, 66, 70, 80, 84, 96, 100, 104, 108, 112, 122, 124
30280 ..... 34, 38, 46, 50, 66, 68, 84, 86, 88, 106, 112, 114
30281 110
30282 ..... 40, 48, 104, 128
30284 94
30287 ..... 32, 36
30302 110
30316 52
30463 44
30465 88
30556 32
30560 64
30655 26
30693 ..... 2, 50
30695 ..... 32, 36, 78, 94, 110
30701 22
30702 22
30753 ..... 32, 36, 86
30813 ..... 40, 66, 78, 82, 96, 100, 104, 110
30833 ..... 20, 108
30858 32
30942 50
30970 ..... 32, 38
31774 46
32070 52
32247 108
36651 52
40095 28
40241 32
40701 ..... 64, 78, 82, 94, 98, 102, 110
40702 ..... 40, 64, 78, 82, 94, 98, 102, 110, 128
40703 ..... 32, 36
40704 ..... 32, 36
42029 ..... 32, 36
42589 ..... 64, 78, 82, 96, 98, 102, 110
44210 110
44611 52
44623 ..... 34, 38
44944 52
45439 48
49227 ..... 40, 64, 78, 82, 94, 98, 102, 110, 128
49232 ..... 78, 82, 94, 102, 110
49529 64
49802 ..... 24, 26, 116
50072 ..... 62, 76, 90, 108
50083 18
50086 32
50103 94
50175 32
50186 ..... 16, 20, 62, 70, 72, 74, 76, 90, 108
50219 104
50221 ..... 34, 36
50225 ..... 8, 20, 26, 50, 76
50235 112
100456 ..... 12, 124
100500 44
100589 4
100590 4
100862 4
101898 ..... 10, 12, 34, 38, 66, 80, 84, 96, 100, 104, 112
103351 ..... 64, 98, 104
103562 20
103576 ..... 32, 36
103738 ..... 32, 36
103921 110
105069 62
105197 ..... 68, 86, 88, 106, 114
106717 110
108233 ..... 32, 36, 66, 78, 82, 96, 100, 104, 110
109064 42
109791 ..... 64, 78, 98, 104
110817 44
111545 26
111981 96
111982 96
111983 96
111984 96
111985 96
111986 96
111987 96
112129 20
112130 20
113222 44
114120 94
114140 ..... 78, 94
114141 ..... 78, 94

INDEX

114142 ..... 78, 94
114143 ..... 78, 94
114229 78
114230 78
114233 70
114382 14
115759 52
118011 4
118185 4
123055 14
123084 16
123087 14
123180 14
123202 ..... 16, 20
123613 12
123614 12
123629 2
123647 12
123708 20
123721 124
123887 120
123935 6
123936 6
123978 48
123989 34
125145 ..... 10, 44
125146 ..... 10, 46
125516 ..... 32, 36
125590 ..... 32, 36
125592 ..... 32, 36
125654 44
125788 44
125789 44
129120 ..... 98, 102
129143 ..... 64, 98, 104
129148 ..... 64, 98, 102
129149 ..... 98, 102
129459 118
129481 110
129566 ..... 42, 86
129772 114
129773 114
129800 82
129801 82
129961 110
129962 110
129963 110
129965 114
129976 82
129977 82
130246 6
130283 6
132607 18
133014 46
133043 40
133047 46
133086 52
133124 4
133126 4
133131 6
133133 86
133138 108
133147 122
133148 122
133158 88
133160 18
133161 20
133165 ..... 30, 64, 78, 82, 94, 100, 104, 110
133166 ..... 30, 64, 78, 82, 94, 100, 104, 110
133223 14
133241 74
133242 74
133249 48
133257 74
133260 ..... 78, 82, 110
133261 ..... 78, 94
133262 74
133268 ..... 64, 98, 102
133270 ..... 98, 102
133277 86
133280 ..... 78, 94
133288 74
133344 76
133345 76
133367 4
133372 6
133378 ..... 32, 36
133421 24
133439 108
133490 14
133494 18
133497 18
133498 18
133500 14
133503 18
133504 18
133509 18
133510 18
133513 18
133515 14
133519 14
133521 16
133532 52
133533 52
133537 52
133569 24
133631 28
133632 28

INDEX

133634 28
133637 28
133640 28
133641 28
133642 28
133643 28
133644 28
133645 28
133648 30
133649 30
133652 30
133653 30
133672 62
133683 114
133716 118
133730 94
133781 118
133783 14
133877 14
133883 14
133886 118
133891 4
133892 6
133900 4
133942 2
133946 6
133949 14
133980 62
133981 62
133984 72
133997 118
134002 44
134003 44
135157 ..... 12, 20
135234 ..... 64, 100
135238 96
135248 ..... 2, 40, 50, 104, 128
135267 ..... 68, 106
135305 ..... 50, 68, 86, 88, 106, 114
135358 26
135374 120
135381 26
135397 84
135407 46
135423 50
135425 110
135443 94
135444 ..... 32, 36, 64, 78, 82, 94, 98, 102, 110
135522 16
135597 18
135598 64
135626 8
135630 8
135655 76
135693 26
135694 26
135748 26
135873 ..... 2, 126
135906 8
135980 ..... 34, 38
135995 48
136018 ..... 68, 86, 106
136596 46
140225 52
142777 28
151376 6
151470 18
151551 10
151684 116
151686 116
151691 18
151792 14
151793 18
151941 90
151942 90
151971 6
151975 38
152736 118
153151 82
153492 ..... 48, 68, 86, 88, 106, 114
153692 88
153933 86
153989 86
153990 86
156037 22
156051 ..... 32, 36
156116 14
156212 44
156232 108
156268 114
156286 6
156363 6
156365 6
156426 14
156452 24
156501 44
156511 44
156563 4
156565 44
156574 44
156606 ..... 78, 96
156612 86
156614 ..... 42, 106
156682 2
156695 2
156704 4
156725 ..... 64, 78, 82, 94, 98, 102, 110
156741 44

INDEX

156742 44
156743 ..... 16, 46
156744 14
156745 14
156747 14
156749 14
156750 14
156758 ..... 78, 82, 110
156759 ..... 64, 82, 98, 102, 110
156773 4
156779 108
156780 108
156783 108
156784 108
156799 ..... 16, 20
156803 14
156839 44
156840 44
156843 48
156852 ..... 24, 116
156853 ..... 24, 116
156865 14
156868 10
156869 14
156879 ..... 14, 20
156882 44
156883 44
156909 78
156910 ..... 64, 98, 102
156935 78
156938 ..... 64, 78
156939 ..... 64, 98, 102
156940 94
156945 28
156946 28
156948 76
156967 96
156969 48
156970 ..... 98, 102
158069 ..... 68, 86, 106
158253 96
158377 42
158587 82
158633 ..... 48, 68, 86, 88, 106, 114
158666 114
158704 114
158722 114
158895 26
163598 ..... 64, 78, 82, 96, 98, 102, 110
164131 118
164223 26
166309 58
172423 118
172558 20
174131 52
174769 46
174775 ..... 10, 46
174816 44
174927 34
174928 34
174929 34
174930 34
174931 34
174932 34
174933 34
174934 34
174935 34
174936 34
174937 34
174938 40
174939 40
174940 40
174941 40
174942 40
174948 52
174960 52
184437 118
184440 118
187006 76
187010 ..... 32, 36
187018 64
187030 64
187031 64
187032 64
187081 14
187101 2
187112 2
187137 14
187142 ..... 34, 38
187183 64
187193 ..... 68, 86, 106
187194 48
187203 46
187225 28
187229 24
187242 ..... 32, 36
187252 ..... 24, 116
187253 ..... 24, 116
187255 28
187256 28
187257 30
187258 30
187313 28
187315 28
187316 28
187317 30
187318 30
187390 76

INDEX

187391 76
187415 76
187416 76
187427 18
187428 18
187466 24
187475 22
187476 22
187477 22
187478 22
187479 24
187480 22
187481 24
187482 22
187483 26
187484 22
187485 22
187486 22
187487 22
187492 22
187493 22
187494 22
187495 22
187496 ..... 22, 116
187497 ..... 22, 116
187502 22
187517 24
187518 74
187520 24
187523 22
187524 22
187525 22
187550 28
187551 28
187552 28
187553 28
187554 30
187555 30
187556 30
187557 30
187558 30
187559 30
187560 30
187561 30
187567 38
187596 ..... 32, 36
187619 18
187620 14
187621 48
187637 48
187641 48
187645 48
187653 48
187655 48
187658 48
187659 48
187660 48
187669 48
187670 ..... 68, 86, 106
187682 88
187686 114
187694 48
187696 22
187697 22
187698 22
187701 48
187708 48
187723 ..... 64, 78, 82, 94, 98, 104, 110
187730 48
187732 6
187791 34
187793 48
187815 ..... 32, 36
187816 ..... 32, 36
187822 48
187898 26
187900 24
187918 ..... 24, 116
187925 24
187928 12
187947 6
187948 6
187950 36
187958 ..... 32, 36
187965 ..... 32, 36
187967 ..... 24, 116
187976 110
187977 110
187988 10
188467 20
190866 110
191757 88
194530 30
197319 ..... 84, 86, 114
197320 ..... 84, 86, 114
213830 24
220199 12
220200 12
220201 124
220237 4
220259 124
220274 ..... 32, 36
220305 124
220306 124
220307 124
220308 124
220317 18
220320 18

INDEX

220328 86
220330 106
220337 42
220338 6
220339 4
220340 114
220342 4
220343 6
220347 68
220354 114
220380 4
220381 4
220446 4
220447 4
220449 4
220471 38
220535 40
220570 42
220571 118
220572 118
220573 118
220628 90
220654 82
220656 82
220657 ..... 64, 98
220658 ..... 64, 100
220679 46
220734 42
220807 60
220808 60
220809 60
220810 60
220811 60
220812 60
220813 60
220814 60
220815 60
220816 60
220817 56
220818 56
220819 56
220820 56
220821 56
220822 56
220823 56
220824 56
220825 56
220826 56
220831 58
220832 58
220834 58
220835 60
220836 56
220843 34
220846 34
220847 32
220852 6
220863 58
220866 58
220867 58
220868 58
220869 58
220870 58
220871 58
220872 58
220876 60
220885 56
220907 34
220908 34
220938 14
220948 38
220949 38
220950 38
220951 38
220952 38
220953 38
220955 38
220956 38
220957 38
220958 38
229016 44
245117 38
245122 6
245157 38
245160 38
245246 108
245301 24
245335 52
245357 108
245428 54
245432 54
245433 54
245434 54
245435 54
245436 54
245437 54
245438 54
245439 54
245440 54
245441 54
245443 54
245672 4
245673 4
245675 4
245749 70
245750 70
245751 70
245752 70

245753 ..... 32, 36
245757 70
245760 92
245761 92
245763 72
245804 26
245805 26
245815 72
245816 72
245820 ..... 98, 102
245852 62
245891 124
245892 124
245910 124
245912 124
245966 18
245978 52
248245 34
248466 20
248469 6
248850 26
252259 20
252559 78
276797 14
279011 ..... 98, 102
279012 ..... 98, 102
279013 ..... 98, 102
279014 ..... 98, 102
279028 12
279034 ..... 98, 102
279035 ..... 98, 102
279081 24
279163 ..... 104, 128
279227 ..... 104, 128
279228 ..... 104, 128
279252 92
279280 104
279281 ..... 102, 128
279282 ..... 102, 128
279283 ..... 102, 128
279490 38
279491 38
279493 76
279652 18
279658 18
279670 4
279671 4
279689 24
279690 18
279691 18
279746 118

B

B4828 10
B4829 122
B5082 116
B5083 116
B5612 124
B5663 10
B5667 ..... 76, 82, 84, 86
B5668 ..... 74, 78, 80, 86
B5669 ..... 90, 98, 100, 106
B5670 ..... 90, 94, 96, 106
B5671 ..... 62, 64, 66, 68
B5672 ..... 108, 110, 112, 114
B5682 120
B5761 ..... 62, 64, 66, 68
B5762 ..... 76, 82, 84, 86
B5847 88
B5883 92
B6057 126
B6151 70
B6157 128
B6202 ..... 90, 102, 104, 106
B6206 92

MacDon®

MacDon Industries Ltd.
680 Moray Street
Winnipeg, Manitoba
Canada R3J 3S3
t. (204) 885-5590
f. (204) 832-7749

MacDon, Inc.
10708 N. Pomona Avenue
Kansas City, Missouri
United States 64153-1924
t. (816) 891-7313
f. (816) 891-7323

MacDon Australia Pty. Ltd.
A.C.N. 079 393 721
P.O. Box 243, Suite 3, 143 Main Street
Greensborough, Victoria, Australia 3088
t. 03 9432 9982
f. 03 9432 9972

LLC MacDon Russia Ltd.
123317 Moscow, Russia
10 Presnenskaya nab, Block C
Floor 5, Office No. 534, Regus Business Centre
t. +7 495 775 6971
f. +7 495 967 7600

CUSTOMERS
MacDon.com

DEALERS
Portal.MacDon.com

Trademarks of products are the marks of their respective manufacturers and/or distributors.

Printed in Canada